SG73/D
REV 5

MOTOROLA SEMICONDUCTOR
MASTER SELECTION GUIDE

MOTOROLA

MOTOROLA

MASTER SELECTION GUIDE

The information in this book has been carefully checked and is believed to be accurate; however, no responsibility is assumed for inaccuracies. Furthermore, this information does not convey to the purchaser of semiconductor devices any license under the patent rights to the manufacturer.

Motorola reserves the right to make changes without further notice to any products herein. Motorola makes no warranty, representation or guarantee regarding the suitability of its products for any particular purpose, nor does Motorola assume any liability arising out of the application or use of any product or circuit, and specifically disclaims any and all liability, including without limitation consequential or incidental damages. "Typical" parameters can and do vary in different applications. All operating parameters, including "Typicals" must be validated for each customer application by customer's technical experts. Motorola does not convey any license under its patent rights nor the rights of others. Motorola products are not designed, intended, or authorized for use as components in systems intended for surgical implant into the body, or other applications intended to support or sustain life, or for any other application in which the failure of the Motorola product could create a situation where personal injury or death may occur. Should Buyer purchase or use Motorola products for any such unintended or unauthorized application, Buyer shall indemnify and hold Motorola and its officers, employees, subsidiaries, affiliates, and distributors harmless against all claims, costs, damages, and expenses, and reasonable attorney fees arising out of, directly or indirectly, any claim of personal injury or death associated with such unintended or unauthorized use, even if such claim alleges that Motorola was negligent regarding the design or manufacture of the part. Motorola and Ⓜ are registered trademarks of Motorola, Inc. Motorola, Inc. is an Equal Opportunity/Affirmative Action Employer.

Printed in U.S.A.

© MOTOROLA INC., 1992
Previous Edition © 1991
"All Rights Reserved"

Buffalo, Bullet-Proof, BurstRAM, CDA, Customer Defined Array, DECAL, Designer's, DIMMIC, DOME, DSPRAM, ECLinPS, ECLinPS LITE, ECL300, E-FETs, EpiBase, FIRsT, GEL-PAK, GEMFET, H4C Series, HYPERformance, ICePak, L^2TMOS, MAACPAC, MATCHEDPAIR, MDTL, MECL, MECL 10K, MECL 10H, MECL III, MEGAHERTZ, MCCS, Media Engine, Memorist, MHTL, MicroCool, MicroSIMM, MONOMAX, MOSAIC, MOSAIC I, MOSAIC II, MOSAIC III, Mosorb, MTTL, Multi-Pak, MUSCLE, Mustang, µSIMM, OACS, OnCE, PHACT, PowerBase, POWERTAP, PRISMCard, QUIL, SCANSWITCH, SENSEFET, SMALLBLOCK, SMARTDISCRETES, SMARTMOS, SMARTswitch, SORF, Surmetic, SWITCHMODE, Symmetric Superscaler, TestPAS, Thermopad, Thermopad II, Thermowatt, Unibloc, UNIT/PAK, Uniwatt, X-Ducer, Z-Switch, and ZIP R TRIM are trademarks of Motorola Inc.

TMOS is a registered trademark of Motorola Inc.
Daisy is a trademark of Daisy Systems Corp.
Design Compiler and HDL Compiler are trademarks of Synopsys, Inc.
ETHERNET is a trademark of Xerox Corp.
FACT and FAST are trademarks of National Semiconductor Corp.
GED is a trademark of Valid Logic Systems Inc.
Gate Ensemble, Verilog-XL, and Veritime are trademarks of Cadence Design Systems, Inc.
IBM is a trademark of International Businss Machines.
HP/Apollo is a registered trademark of Hewlett-Packard Inc.
Macintosh is a trademark of Apple Computer, Inc.
Mentor Graphics is a trademark of Mentor Graphics Corp.
Sun-3 and S-4 is a trademark of Sun Microsystems Inc.
UNIX is a trademark of AT&T.
VAX is a trademark of Digital Equipment Corp.

All brand names and product names appearing in this document are registered trademarks or trademarks of their respective holders.

MASTER SELECTION GUIDE

WHERE WE STAND. . . TOTAL CUSTOMER SATISFACTION

Service, speed and facility of response, product quality and reliability are the goals to which we are dedicated. Our commitment to progress such as Six Sigma performance and Cycle Time Reduction are symbolic of a culture in which Total Customer Satisfaction is, overwhelmingly, our primary objective.

In today's highly competitive market, selecting the most effective semiconductor components for a given application poses a significant challenge. The range of available functions and the sheer number of components within each unique product line is staggering. Add to this the number of vendors capable of satisfying a portion of the overall system demands and the selection of a cost-effective component complement can be as time consuming as the design of the system itself.

This is where Motorola occupies a unique position among semiconductor manufacturers – one that can significantly shorten the product selection cycle. Please consider these facts:

As a manufacturer of semiconductors since the very beginning of the technology, Motorola has emerged as a leading supplier of such components to the world market.

Motorola's product line is the *broadest* in the industry, capable of filling 75-80% of the many applications for semiconductor devices.

In each of its various product categories, Motorola is a recognized leader, with leading edge products as well as commodity products for mass applications.

Motorola's vast network of sales offices and distributors, augmented by manufacturing centers throughout the world, not only insures easy communications, cost-effective pricing and rapid service, but guarantees a continuing stream of state-of-the-art products based on world-wide experience and demand.

HOW TO USE THIS GUIDE. . .

This Selection guide is arranged to provide three-way assistance to engineers and technicians in making a first-order selection of components best suited for a specific circuit or system design.

1. If you have a device number that needs identification or if you want to know if Motorola manufacturers a particular device type –

Turn to the **Device Index** for a complete listing of Motorola products, and the page numbers where more detailed information is given for these products.

2. If you have a device name or acronym and wish to know if Motorola makes such a device –

Look for it in the **Subject Device.**

3. If you want a quick overview of Motorola products for a specific product category –

Use the handy three-layered **Contents** system, which guides you through the book quickly and efficiently.

TELEPHONE ASSISTANCE, NORTH AMERICA ONLY

Call toll-free any weekday, 8:00 a.m. to 4:00 p.m., MST.

To order technical literature by specific document title, i.e., SGXX/D or DLXXX/D, or by part number only, call

1-800-441-2447

For design-in assistance, call

1-800-521-6274

NON-NORTH AMERICAN LOCATIONS

Please contact your local Motorola Sales Office or Authorized Distributor. Thank you.

TABLE OF CONTENTS

ASIC Application Specific Integrated Circuits 1.0-1

Gate Arrays 1.1-1
ASIC Preview 1.1-2
Bipolar High-Speed ECL & ETL 1.1-2
CMOS 1.0 Micron HDC Series 1.1-3
Sub- Micron H4C Series 1.1-4
Design Automation Software
OACS Highlights 1.1-5
OACS Design Flow 1.1-6
Advanced Packaging 1.1-7
Design Centers 1.1-8
Literature 1.1-9
Standard Cells 1.1-10
  Introduction 1.1-10
  Basic Digital Cells 1.1-10
  Basic Analog Cells 1.1-10
  Customized Memories 1.1-10
  Programmable Logic Arrays 1.1-10
  Special Cells 1.1-11
  JTAG Boundary Scan Cells 1.1-11
  CAD Support 1.1-11
  Scalability 1.1-11
  Family Characteristics 1.1-12
  CAD Support Features 1.1-13
  Front-End System Design 1.1-13

Microcomputer Components
Microcomputer Components 2.0-1
Digital Signal Processors 2.1-1
  DSP56100-16 Bit 2.1-2
  DSP56000-24-Bit 2.1-3
  DSP96000-32 Bit 2.1-4
  DSP Peripherals 2.1-5
  DSP Development Tools 2.1-6
  Development Software 2.1-7
The M680000 MPU Family 2.2-1
  Microprocessors 2.2-2
  Integrated Processors 2.2-4
  Coprocessors 2.2-5
  DMA Controllers 2.2-5
  Network Devices 2.2-5
  Data Communications Devices 2.2-7
  General Purpose I/O 2.2-7
  Fiber Distributed Data Interface 2.2-7
  Development Tools 2.2-8
  Support Software 2.2-8
The M88000 RISC Family 2.3-1
  Architecture, Performance and Software Compatibility 2.3-2
  Microprocessor 2.3-2
  Cache/Memory Management Units 2.3-3
Single-Chip Microcontrollers (MCUs) 2.4-1
  The M68300 Family 2.4-2
  The M68HC16 Family 2.4-2
  The M68HC11 Family 2.4-5
  The M6801 Family 2.4-8
  The MC68HC05 Family 2.4-9
  The M6804 Family 2.4-11
  The M6805 Family 2.4-11
  One-Time Programmable/Emulator MCUs 2.4-11
  8-Bit MPU/Peripherals 2.4-13
  Serial Peripheral Interface 2.4-13
  Hardware Development Tools 2.4-14
  Software Development Tools 2.4-16
PC Peripheral Products 2.5-1
  Floppy Disk Controller 2.5-2
  Real Time Clocks 2.5-3

Microcomputer Components (Cont)
  Multifunction I/O Controllers 2.5-4
  SCSI Devices 2.5-4
  EIA-232 Driver/Receivers 2.5-4
Local Operating Network Products 2.6-1
  NEURON CHIPS 2.6-2
  LON BUILDER Workbench 2.6-3
MOS Memories 2.7-1
  Static RAMS 2.7-2
  Fast Static RAMS 2.7-2
  Fast Static RAM Modules 2.7-2
  General Static RAMs 2.7-4
  Dynamic RAM 2.7-4
  DRAMs 2.7-4
  DRAM Modules 2.7-5
  Selection By Function 3.1-5

TTL, ECL, CMOS and Special Logic Circuits 3.0-1
Which Logic Family Is Best for You? 3.1-1
  Cross-Functional Tables 3.1-5
  AND Gates 3.1-5
  Special Logic Circuits 3.1-16
  TTL 3.1-20
  TTL 3.1-20
MECL 3.1-29
CMOS 3.1-36
  Special Logic Circuits 3.1-50
Ordering Information 3.1-55
Case Information 3.1-57
Packaging Information 3.1-61

Linear and Interface Integrated Circuits 4.0-1
Amplifiers and Comparators 4.1-1
  Operational Amplifiers 4.1-2
  High Frequency Amplifiers 4.1-1
  Miscellaneous Amplifiers 4.1-8
  Comparators 4.1-9
Power Supply Circuits 4.2-1
  Linear Voltage Regulators 4.2-2
  Special Regulators 4.2-5
  Switching Regulator Control Circuits 4.2-6
  Special Switching Regulator Controllers 4.2-9
  Power Supervisory Circuits 4.2-10
  MOSFET Drivers 4.2-13
Power/Motor Control Circuits 4.3-1
  Power Controllers 4.3-1
  Motor Controllers 4.3-4
Voltage References 4.4-1
  Precision Low Voltage Reference 4.4-2
Data Conversion 4.5-1
  A-D Converters 4.5-2
  D-A Converters 4.5-3
  A-D/D-A Converters 4.5-3
  Package Overview 4.5-4
Interface Circuits 4.6-1
  Magnetic Read/Write Interface and Control 4.6-2
  Microprocessor Bus Interface 4.6-4
  Single-Ended Bus Transceivers 4.6-5
  Line Receivers 4.6-6
  EIA-232-D/V.28 CMOS Drivers/Receivers 4.6-7
  Peripheral Drivers 4.6-7

TABLE OF CONTENTS

Display Drivers 4.6-8
Package Overview 4.6-9
Communication Circuits 4.7-1
RF Communications 4.7-2

Linear and Interface Integrated Circuits (Cont)

Telecommunications 4.7-6
Phase-Locked Loop Components 4.7-22
Package Overview 4.7-24
Consumer Electronic Circuits 4.8-1
Entertainment Radio Receiver Circuits .. 4.8-1
Video Circuits 4.8-3
Remote Control Circuits 4.8-6
Package Overview 4.8-7
Automotive Electronic Circuits 4.9-1
Voltage Regulators 4.9-2
Electronic Ignition 4.9-2
Special Functions 4.9-2
Other Linear Circuits 4.10-1
Timing Circuits 4.10-2
Multipliers 4.10-2
Remote Control Circuits 4.10-3
Smoke Detectors (CMOS) 4.10-4
Package Overview 4.10-5
Surface Mount Technology 4.11-1
Linear and Interface Devices
Bipolar 4.11-2
MOS Digital-Analog 4.11-6
Package Overview 4.11-8
Tape and Reel 4.11-9

Discrete Products 5.0-1
Discrete In-Brief 5.0-1
Motorola Device Classifications 5.0-2
Small Signal Transistors, FETs and Diodes .. 5.1-1
Bipolar Transistors 5.1-2
Plastic-Encapsulated Transistors 5.1-2
Plastic-Encapsulated Multiple Transistors 5.1-8
Plastic-Encapsulated Surface Mount Transistors 5.1-10
Metal-Can Transistors 5.1-16
Field-Effect Transistors 5.1-19
JFETs 5.1-19
MOSFETs 5.1-21
Surface Mount FETs 5.1-22
Tuning and Switching Diodes 5.1-24
Tuning Diodes - Abrupt Junction ... 5.1-24
Tuning Diodes - Hyper-Abrupt Junction 5.1-28
Hot-Carrier Diodes - Schottky 5.1-32
Switching Diodes 5.1-33
Multiple Switching Diodes 5.1-36
TVS (Transient Voltage Suppressors)/
Zener Regulator and Reference Diodes . 5.2-1
Voltage Regulator Diodes 5.2-2
Axial Leaded 5.2-2
Surface Mount 5.2-7
Voltage Reference Diodes 5.2-9
Temperature Compensated 5.2-9
TVS(Transient Voltage Suppressors) .. 5.2-10
General Purpose 5.2-10
Axial Leaded 5.2-10
Surface Mount 5.2-18
Automotive 5.2-23
Power Transistor Products 5.3-1
TMOS Power MOSFETs 5.3-3
Plastic Packages 5.3-3
Metal Packages 5.3-6
Logic-Level MOSFETs 5.3-7
SENSEFETs 5.3-7
Surface Mount Products 5.3-8
Multiple Chip Products 5.3-10

Discrete Products (Cont)

SMARTDISCRETES Products 5.3-12
MOSFET Turn-Off Devices 5.3-13
Bipolar Power Transistors 5.3-15
Plastic Packages 5.3-16
Surface Mount 5.3-25
Metal Packages 5.3-26
Audio 5.3-34
CRT Deflection 5.3-35
Power Modules 5.3-37
AIEG Power MOSFET Modules ... 5.3-37
Energy Management Series Modules 5.3-38
Rectifiers 5.4-1
Application Specific Rectifiers 5.4-2
Schottky (High Speed, Low Voltage) 5.4-3
Ultrafast Recovery 5.4-8
Fast Recovery 5.4-10
General Purpose 5.4-12
Thyristors and Triggers 5.5-1
SCRs 5.5-2
General Purpose 5.5-2
TRIACs 5.5-11
General Purpose 5.5-11
Optically Isolated Driver/Triac Combinations 5.5-24
Triggers 5.5-25
SIDACs 5.5-25
PUT-Programmable Unijunctions .. 5.5-25
SBS-Silicon Bidirectional Switch ... 5.5-25
Optoelectronic Devices 5.6-1
Optoisolators 5.6-2
Emitters/Detectors 5.6-10
Optointerrupters 5.6-11
Fiber Optic Components 5.6-12
Receptacle Mounted Fiber Optic Transmitter and Receiver Components 5.6-14
Optoelectronic Chips 5.6-15
Sensors 5.7-1
Pressure Sensors 5.7-2
Temperature Sensors 5.7-9
RF Products 5.8-1
Power Transistors 5.8-3
Field Effect (TMOS) 5.8-3
Bipolar 5.8-5
Small-Signal Transistors 5.8-20
Selection by Package 5.8-20
Low Noise 5.8-25
CATV, MATV and Class A Linear .. 5.8-26
CRT Drivers 5.8-27
High-Speed Switches 5.8-28
UHF and Microwave Oscillators ... 5.8-28
Complementary Devices 5.8-28
RF Amplifiers 5.8-31
High Power 5.8-31
Land Mobile/Portable 5.8-31
Base Station 5.8-33
TV Transmitters 5.8-34

TABLE OF CONTENTS

PAM Series - Ultra Linear 5.8-34
PAA Series - Integrated Assemblies 5.8-35
Low Power 5.8-36
CATV Distribution 5.8-36
General Purpose Wideband 5.8-38
SHP and DHP Linear 5.8-41
CRT Drivers 5.8-42
Carrier Band Module 5.8-42
RF Chips 5.8-43

Discrete Products (Cont)

Die Geometries 5.8-44
Parts List of Available Die 5.8-45
Primary TO-220 Leadform Dimensions 5.9-1
ICePAK Leadform Dimensions 5.9-3
Tape and Reel Specifications and Packaging Specifications 5.10-1
Embossed Tape and Reel 5.10-1
Lead Tape Packaging Standards for Axial-Lead Components 5.10-5
TO-92 Radial Tape Reel or Ammo Pack 5.10-6
Package Outline Dimensions and Footprints 5.11-1

Military Integrated Circuits and Discrete Products 6.0-1
Product Process Flows 6.1-2
Manufacturing, Quality & Test 6.1-12
Packaging, Mechanical Data & Nomenclature 6.1-17
Chip & Wafer Products 6.1-23

Military Integrated Circuits and Discrete Products 6.0-1
Analog/Telecom & Special Function Products 6.2-2
Logic Products 6.2-6
Memory Products 6.2-27
Microprocessor & Microcontroller Products 6.2-23
RISC & DSP Products 6.2-36
Discrete Products 6.3-1
MIL-Qualified Products 6.3-5
MIL-Processed Products 6.3-12
Product Literature and Technical Training 7.0-1
Technical Data Services 7.1-1
Product Literature 7.1-2
Technical Training 7.1-5

Device Index and Subject Index
Device Index 8.1-2
Subject Index 8.1-42
Sales and Distributors Listing 9.0-1

SEMICUSTOM APPLICATION SPECIFIC INTEGRATED CIRCUITS (ASICs)

MICROCOMPUTER COMPONENTS

STANDARD LOGIC FAMILIES

LINEAR AND INTERFACE INTEGRATED CIRCUITS

DISCRETE PRODUCTS

MILITARY PRODUCTS

PRODUCT LITERATURE AND TECHNICAL TRAINING

DEVICE INDEX AND SUBJECT INDEX

SALES OFFICES AND DISTRIBUTORS

SEMICUSTOM
Application Specific Integrated Circuits

In Brief . . .

Motorola supports strategic programs and co-development partnerships to accelerate the availability of advanced processes (CMOS, BiCMOS, Bipolar), packaging and CAD technology. Extensive research, manufacturing and financial resources are focused to develop and maintain leading edge capabilities.

	Page
Gate Arrays	
ASIC Preview	1.1-1
Bipolar	
High-Speed ECL & ETL	1.1-2
CMOS	
1.0 Micron HDC Series	1.1-3
Sub-Micron H4C Series	1.1-4
Design Automation Software	
OACS Highlights	1.1-5
OACS Design Flow	1.1-6
Advanced Packaging	1.1-7
Design Centers	1.1-8
Literature	1.1-9
Standard Cells	1.1-10
Introduction	1.1-10
Basic Digital Cells	1.1-10
Basic Analog Cells	1.1-10
Customized Memories	1.1-10
Programmable Logic Arrays	1.1-10
Special Cells	1.1-11
JTAG Boundary Scan Cells	1.1-11
CAD Support	1.1-11
Scalability	1.1-11
Family Characteristics	1.1-12
CAD Support Features	1.1-13
Front-End System Design	1.1-13

ASIC Preview

Bipolar
High-Speed ECL & ETL Arrays

Motorola's MOSAIC III™ technology features modified transistor structures to reduce series base resistance and collector-base junction capacitance. The result is enhanced switching speed. Mixed ECL/TTL interface compatibility and high frequency (over 2.5 GHz) operation highlights the newly introduced ETL Series.

CMOS
1.0 Micron HDC Series
Sub-Micron H4C Series

High density CMOS arrays (HDC Series) are built on 1.0 micron drawn, triple-layer-metal CMOS process. By utilizing three layers of metal for signal routing, designers can achieve greater utilization on a channelless architecture of minimum dimensions.

The sub-micron (0.7μLeff) H4C Series enables densities over 300K gates with 180 picosecond typical gate delay performance. The H4C supports the speed requirements of 60 MHz processors with a power dissipation of only 3 microwatts/Gate/MHz.

Design Automation Software (OACS™)

Motorola's Open Architecture CAD System (OACS) provides a complete ASIC development environment using industry-standard workstations and leading third-party design and verification tools. The OACS system integrates sophisticated ASIC design software tools to handle high performance designs and has the required flexibility to support future technology advances.

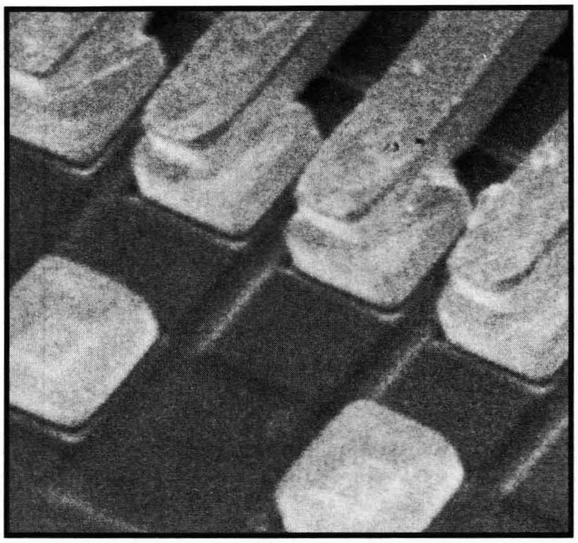

Motorola's TAB (Tape Automated Bonding) provides maximum I/O density and performance.

Architecture for the 90's
CDA™ (Customer Defined Arrays)

Performance, density and power dissipation are critical issues for next generation ASIC designs. The integration of large diffused blocks and embedded memory enhances intra-chip communication and save board area. The Customer Defined Array (CDA) concept lets designers combine array based, cell based, and full custom logic with diffused memory blocks on a die. The concept equally supports Bipolar and CMOS, each with the capability to incorporate BiCMOS modules.

CDAs customize array architectures to meet specialized system requirements of high density or high performance. This promotes flexibility while minimizing costs (custom test, packaging and elaborate power layout) normally associated with full custom and standard cell architectures.

CDA -THE ARCHITECTURE OF THE 90's

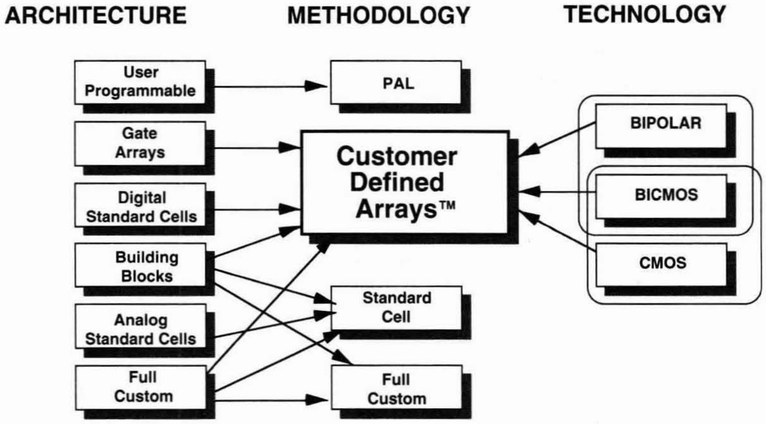

Benefits:

- Time-to-market through integration of functional building blocks and ASIC design methodology.
- Customers can create application specific arrays.
- Diffused RAM optimized for performance and density.
- Fixed die sizes for ease of manufacturing.

Bipolar High-speed ECL & ETL Arrays

Third Generation ETL Series Arrays Extend Design Flexibility

The newly announced ETL Series is flexible enough to simplify translation between high speed logic families.

Three base arrays:
MCA750ETL, MCA3200ETL, MCA6200ETL

- 848 to 6915 Equivalent Gates
- Channelled Architecture for up to 100% Utilization
- Input and Internal ECL Gate Delays - 0.15 ns (Typical)
- TTL Input/Translation Cell Delay - 0.55 ns (Typical)
- Up to 168 Universal I/O Signal Ports
- Bidirectional ECL and TTL I/O Macros
- ECL 100K, Pseudo ECL and TTL Logic Interfaces
- Programmable Speed/Power Levels
- Three-Level Series Gated Macros
- MCA2 and MCA3 ECL Series Library Compatible

Motorola's MOSAIC III™ bipolar process offers unexcelled mixed TTL/ECL interface capability in a high performance, mature technology.

ETL Series Features Mixed ECL-TTL Interface

The ETL Series offers mixed ECL, PECL (pseudo ECL) and TTL compatible interfaces. The Series combines 150 ps typical gate delays with 2500 MHz operating frequencies. Any signal pin can be programmed for input, output, or bidirectional signals in ECL, TTL or PECL logic. MOSAIC III process technology, combined with innovative design, extensive macrocell library and versatile I/O structure adds up to superior performance and flexibility.

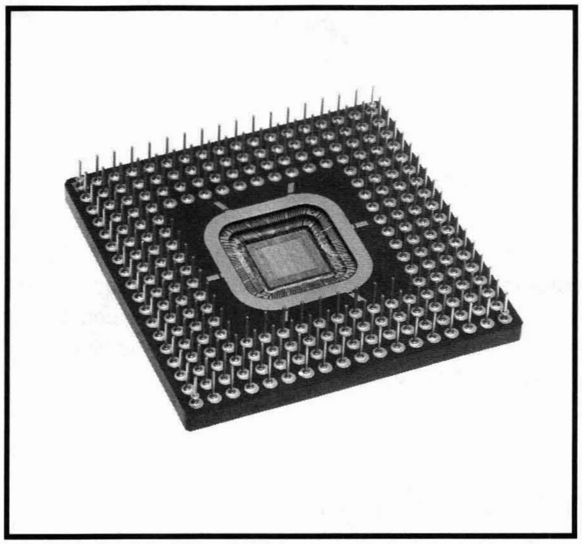

MCA6200ETL in multi-layer ceramic 224 Pin-Grid-Array designed for high frequency, mixed-mode applications.

ETL SERIES BLOCK DIAGRAM

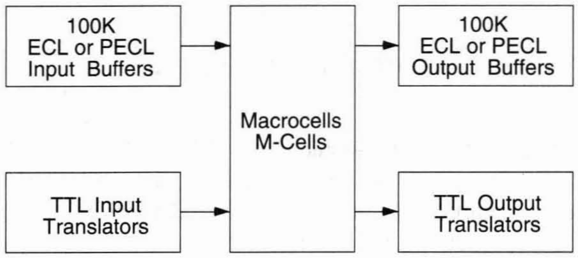

ECL and ETL ARRAY FEATURES

Features / Array	MCA 800ECL	MCA 1500M	MCA 2500ECL	MCA 2200ECL	MCA 10000ECL	MCA 750ETL	MCA 3200ETL	MCA 6200ETL
Technology		MOSAIC II					MOSAIC III	
Equivalent Gates	902	1708+RAM	2760	2412	12402	848	3570	6915
Internal (Major) Cells	36	64	110	68	414	24	110	225
I/O Signals	54	120	120	108	256		Universal I/O Ports	
Input/Interface Cells	NA	NA	NA	96	224			
Output (O) Cells	22	60	68	96	200	42	120	168
Max Gate Delay (ns)	0.5	0.5	0.5	0.175	0.175	0.2	0.2	0.2
Max I/O Frequency (MHz)	770	770	770	1500	1200	2500	2500	2500
Typ. Power Dissipation (W)	2.5	8.0	8.0	3-6	10-30	1-2	4-7	7-12

CMOS
1.0 Micron HDC Series

Built on a 1.0 micron, triple-layer metal CMOS process, the HDC Series represents a significant advancement in microchip technology. By utilizing three layers of metal for signal routing and power distribution, designers can achieve maximum utilization on a channelless architecture having minimum chip dimensions. The result is high performance (subnanosecond loaded gates) combined with unprecedented I/O flexibility and density.

The HDC Series is available in a wide variety of plastic and ceramic, through-board and surface mount packages. The diversity of package style and pin count lets the designer best match system size, cost and performance requirements.

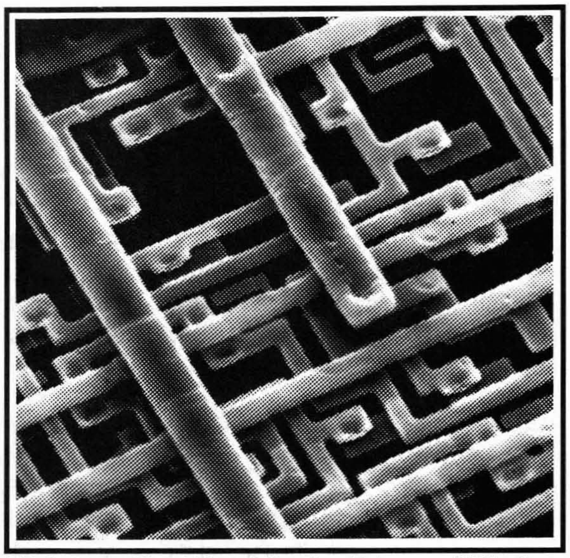

Triple-Layer Metal Signal Routing Enhances Utilization.

Features:

- 3,000 to 105,000 available gates
- Up to 70% utilization (typical)
- Channelless Sea-Of-Gates architecture
- 1.0 micron drawn gate length (0.8 μ L_{eff})
- Triple layer metal routing and power distribution
- Eight transistor, fully utilizable, oxide isolated primary cell
- 250 picosecond typical gate delay (2-input NAND)
- Fixed RAM blocks (single, dual and 4 port)
  8x9 to 64 word x 72 bit configurations
  Typical access time (T_{AA}) = 2.29 ns on 8x9 dual port
- 5 V CMOS and TTL compatible I/O options
- Low power consumption of 6 μW/gate /MHz
- I/O Cells can be paralleled on-chip for 48 mA drive
- Pin functions are 100% programmable as I/O or power on plastic packages
- 2000 V ESD protection, latchup immunity to 100 mA
- Comprehensive workstation based CAD support

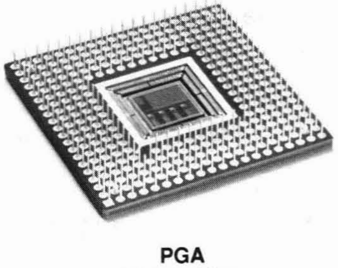

PGA
84–224 Pins

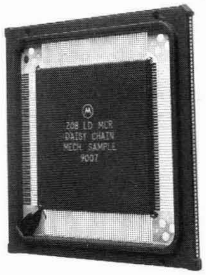

QFP–MCR
64–208 Pins

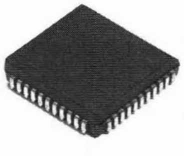

PLCC
28–84 Pins

QFP
64–208 Pins

TYPICAL HDC SERIES PACKAGES

HDC SERIES FEATURES

Array	Available Gates	# of Die Pads (Wirebond)	Available I/O Cells	Die Size (mils square)
HDC003	3,036	76	88	136
HDC006	5,670	96	120	168
HDC008	8,208	108	144	182
HDC011	11,208	120	168	202
HDC016	16,416	136	204	232
HDC027	27,270	168	264	282
HDC031	31,290	180	280	295
HDC049	49,368	216	352	354
HDC064	63,900	240	400	402
HDC105	104,832	300	512	492

CMOS
Sub-Micron H4C Series™
CDA™ Architecture

The H4C Series of CMOS Customer Defined Arrays™ (CDA) provides a new generation of ASICs to capture the functionality of the sub-micron process. The new fabrication process of the H4C Series enables densities of up to 317,968 gates and supports speed requirements of 60 MHz processors with a power dissipation of only 3 µW/MHz/gate.

The CDA architecture offers the versatility and efficiency of system design on a single chip by providing large, fully-diffused architectural blocks such as user configurable SRAMs. Additionally, to ensure high quality ASIC system designs, several design-for-test implementations and clock skew management macros are available.

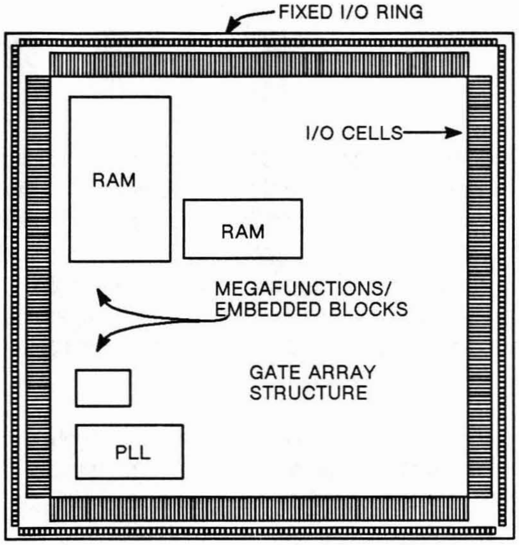

The CDA Concept: Megafunctions and Embedded Blocks Within a Gate Array.

Features:

- 27,000 to 318,000 available gates
- Compatible channelless, Sea-Of-Gates and CDA architectures
- 0.7 micron effective gate length
- Triple-layer-metal signal routing and power distribution
- Up to 70% gate utilization (smaller arrays
- 180 picosecond typical gate delay (2-input NAND)
- User configurable, fully diffused SRAM blocks up to 256K bits
- Low power consumption - 3 µw/MHz/gate
- 3.3 V and 5.0 V CMOS and TTL compatible I/O cells
- Up to 556 power/ground and signal pads
- JTAG (IEEE 1149.1) and LSSD/ESSD scan supported
- High performance packaging
- Extended workstation-based CAD support for embedded functions
- Special macros available to manage clock distribution and skew control

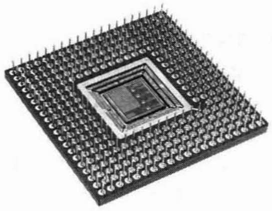

PGA
299-4XX Pins

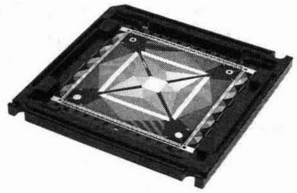

TAB
188-376 Leads

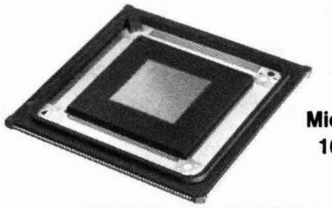

MicroCool QFP
160-208 Pins

TYPICAL H4C SERIES PACKAGES

H4C SERIES FEATURES

Array	Available Gates	# of Die Pads Wirebond	# of Die Pads TAB	Available I/O Cells
H4C027	27,048	160	188	196
H4C035	35,392	176	208	224
H4C057*	57,368	216	256	284
H4C086	85,956	256	304	344
H4C123*	123,136	304	360	416
H4C161	161,364	344	408	476
H4C195*	195,452	376	444	524
H4C318	317,968	468	556	668

*Now available.

Design Automation Software

The Open Architecture CAD System (OACS™) provides Motorola customers with a state-of-the-art and complete ASIC design solution. The OACS consists of sophisticated ASIC design software tools to handle today's advanced gate array designs. The system also incorporates the required flexibility to support ASIC technologies of tomorrow.

The OACS system's primary goal is to provide a user-friendly, efficient suite of ASIC design tools to facilitate error-free silicon design. The system allows the user to verify correctness of the ASIC at each stage of the design process with tools that closely mimic the workings of actual silicon. Traditional design tools addressing design capture, logic interconnection verification, and functional/delay simulation are fully supported by the base

OACS system. Optional productivity enhancement packages such as static timing analysis, Automatic Test Pattern Generation (ATPG), and physical layout are fully supported.

OACS™
Open Architecture CAD System

Timing analysis is simplified with Cadence Design System's Veritime timing package. It analyzes the logic for all internal timing paths and input timing relationships.

By using an open system approach, OACS offers a system that is universally applicable across multiple technologies. The result is a complete design system, fully supported by Motorola and guaranteed to produce silicon that performs as simulated.

OACS 2.0 System Highlights:

- EDIF 2.0.0 backplane approach to providing an open architecture
- Tools accessed through interactive menu system
- Extensive Electrical Rules Checking (ERC)
- Supports multiple technologies
- Design-For-Test support: ESSD/LSSD Scan, JTAG, and Muxed I/O Macros
- Clock-tree synthesis, clock skew management, timing driven layout
- Sophisticated delay calculations
  - Continuous temperature, voltage, and process variation
  - Delays computed based upon estimated and post-layout wiring
  - Based upon intrinsic delays, input edge-rates, output loading, and distributed RC delays.
  - User specified output loading
  - Supports the following design automation tools:
  - Synopsys' Design Compiler™ and HDL Compiler™ logic synthesis tools
  - Mentor Graphics' NetEd™ schematic capture (HP Apollo)
  - Valid Logic's GED™ schematic capture (Sun)
  - Functional, pre- and post-layout simulation through:
  - Mentor Graphics' QuickSim™
  - Cadence's Verilog-XL™
  - Cadence Gate Ensemble™ automatic test pattern generation
  - Motorola's Memorist™ SRAM Compiler (Single and Dual Port)
  - Motorola's TestPAS™ test vector validation and extraction
  - Static and dynamic power calculation
  - Complete documentation covering the entire ASIC design process
  - Support available on Apollo™ DN4xxx, HP9000 Series 40, Sun™ and SPARC workstation

OACS, Memorist, Mustang, TestPAS, are trademarks of Motorola Inc.
Design Compiler and HDL Compiler are trademarks of Synopsys, Inc.
NetEd, QuickSim are trademarks of Mentor Graphics Corp.
GED is a trademark of Valid Logic Systems Inc.
Gate Ensemble, Verilog XL are trademarks of Cadence Design Systems, Inc.
Sun-4 and SPARC are trademarks of Sun Microsystems Inc.
Apollo is a registered trademark of Hewlett Packard Inc.

OACS 2.0 Design Flow

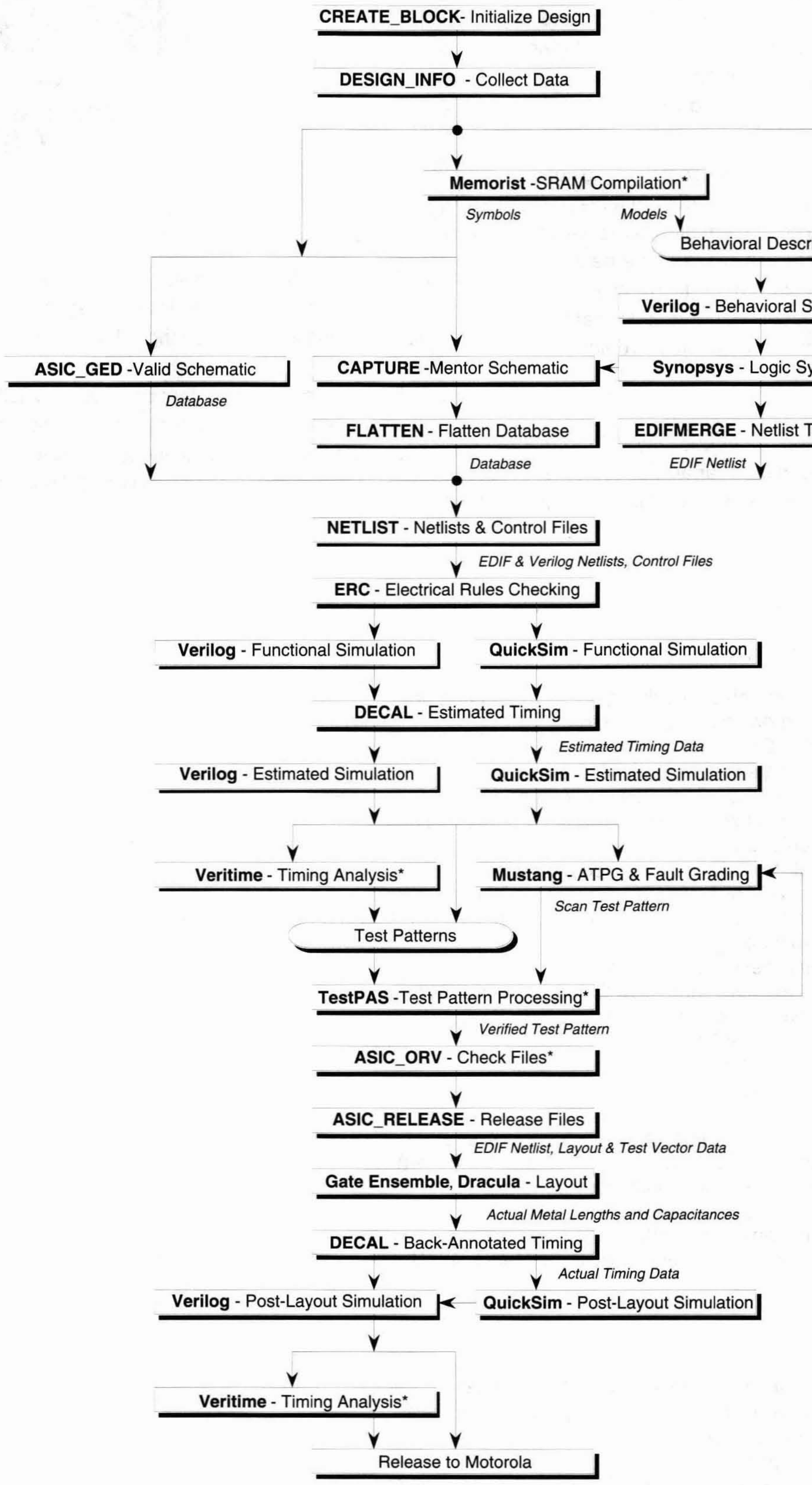

***OACS Release 2.0**

Advanced Packaging

Low cost, high performance systems require excellence in ASIC packaging technology. High density TAB (Tape Automated Bonding), MicroCool, QFP-MCR (Quad Flat Pack in an optional Molded Carrier Ring) and Multichip Module packages illustrate cost effective manufacturing solutions for high lead count, high frequency applications

QFP in the Molded Carrier Ring (MCR)

Motorola currently offers the popular EIAJ standard Plastic Quad Flat Package (QFP) in lead counts from 64 to 208 pins. The Molded Carrier Ring (MCR) is a coplanarity and lead protection device for QFP packages. The ring provides lead protection during manufacturing/testing and shipping.

MicroCool™ Quad Flat Pack

The MicroCool QFP is a new QFP compatible plastic package with improved heat dissipation capacity. It has a heat slug attached to a printed circuit board which supports a copper lead frame. The package incorporates a molded carrier ring to maintain pin coplanarity. MicroCool packaging is cost-effective and capable of meeting high power dissipation (up to 3 W, depending on temperature and ambient conditions).

Tape Automated Bonding

Tape Automated Bonding (TAB) represents the state-of-the-art in packaging technology. It provides high performance with ultra high pin density at low cost. In TAB technology the die pads are fabricated with gold bumps which are used to bond the die to an etched leadframe encased in polyimide tape. The assembled die and TAB tape are supplied ready to be placed in carrier (35 or 70 mm).

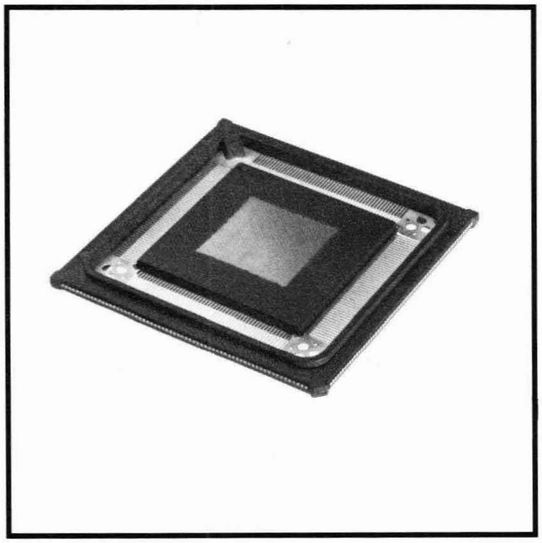

MicroCool Quad Flat-Pack in Molded Carrier Ring lowers board cost and improves thermal performance.

Multichip Modules (Product Preview)

Multichip modules (MCM) can be defined as a packaging technology that places several semiconductor chips, interconnected with a high density substrate, into a single package. Modules often contain complex semiconductor components including microprocessor, ASIC and memory chips. These large, fast, high I/O count semiconductors place a premium on substrate interconnect, normally requiring some form of multilayer thin film, cofired ceramic, or laminate technology.

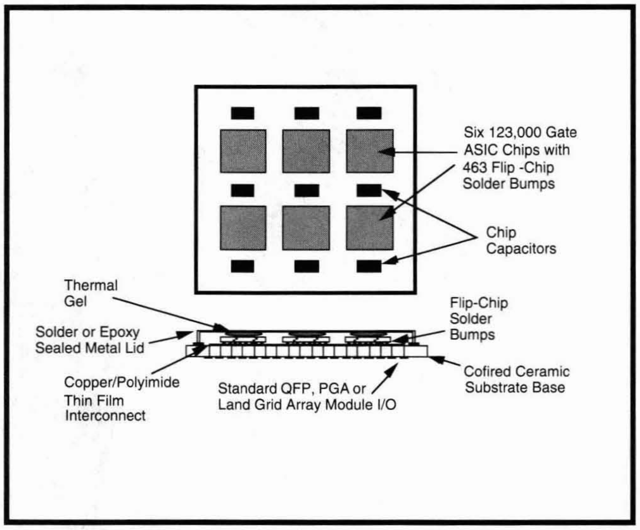

Multichip Module example combines flip-chip die attach technology with a thin-film copper polyimide cofired ceramic substrate.

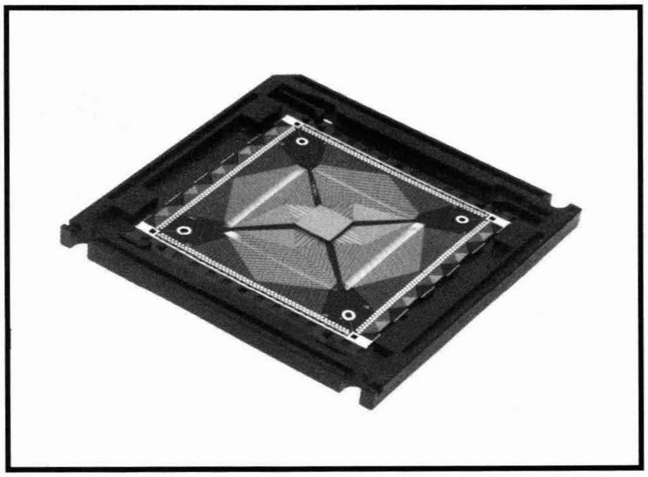

296-lead TAB in a 70 mm Carrier provides 0.4mm outer lead bond pitch.

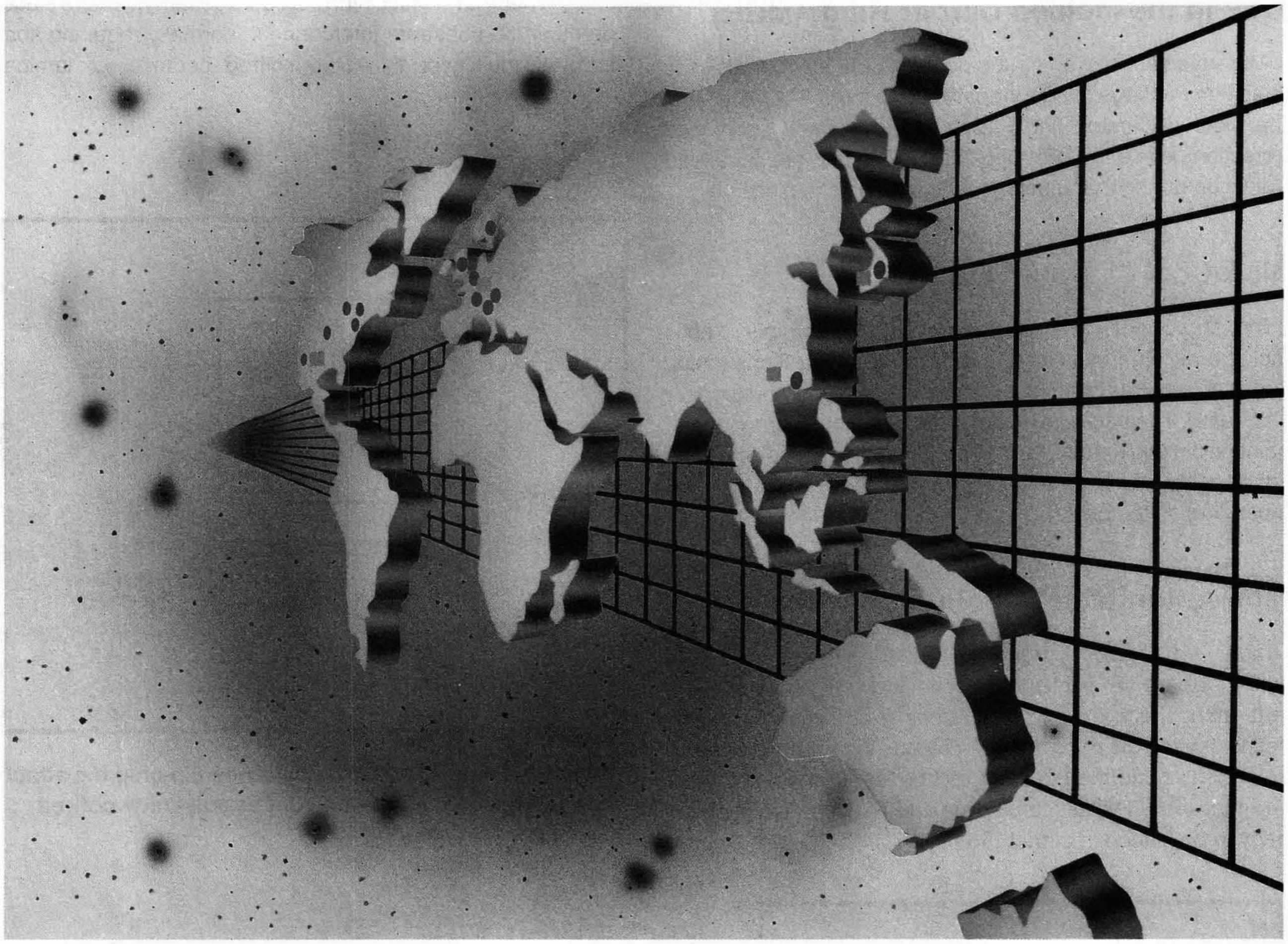

ASIC Regional Design Centers

U.S.A.

California, Los Angeles	(714) 634-2844
California, San Jose	(408) 749-0510
DC/Maryland, Washington	(301) 381-1570
Illinois, Chicago	(708) 490-9500
Massachusetts, Marlborough	(508) 481-8100

International

England, Aylesbury, Bucks	(0296) 395252
France, Vanves	(01) 40355877
Germany, Munich	(089) 92103-0
Holland, Eindhoven	(04998) 61211
Hong Kong, Kwai Chung	480 8333
Italy, Milan	(02) 82201
Japan, Tokyo	(03) 440-3311

Literature

To order any literature item, call or write:

Motorola Semiconductor Products
Literature Distribution Center
P.O. Box 20912
Phoenix, Az 85036 (602) 994-6561

Order Number	Description
Design Manuals	
H4CDM/D	H4C Series CMOS Arrays
HCA62A00DM/D	HCA62A00 Series CMOS Arrays
HDCDM/D	HDC Series CMOS Arrays
BR165/D	MCA800/2500ECL
BR312/D	MCA2800RAM/2800ALS
MCA3ECL/D	MCA3 ECL Series Arrays
MCA3ETLDM/D	MCA3 ETL Series Arrays
Data Sheets	
ETL/D	MCA750ETL, MCA3200ETL and MCA6200ETL Macrocell Arrays
H4C/D	Sub-micron H4C Series CMOS Arrays
HCA62A00/D	HCA62A00 Series CMOS Arrays
HDC/D	HDC Series CMOS Arrays
MCA800ECL/D	MCA800ECL Macrocell Array
MCA1500M/D	MCA1500M Macrocell Array
MCA2200ECL/D	MCA2200ECL Macrocell Array
MCA2500ECL/D	MCA2500ECL Macrocell Array
MCA2800ALS/D	MCA2800ALS Macrocell Array
MCA2800RAM/D	MCA2800RAM Macrocell Array
MCA10000ECL/D	MCA10000ECL Macrocell Array
Brochures/Selector Guides	
SG367/D	ASIC Overview
BR1400/D	Open Architecture CAD System
BR916/D	Packaging Manual for ASIC Arrays
BR931/D	Symbols to Silicon (C_LAN)
Application Notes/Article Reprints	
AN1093/D	Delay and Timing Methods for CMOS ASICs
AN1095/D	Clock Distribution
AN1096/D	Guidelines for Using the MustangTM ATPG System
AN1098/D*	Design Guidelines
AN1099/D*	Test Methodology for HDCSeries Arrays
AN1501/D*	Power Calculation for CMOS Arrays
AN1502/D*	Embedded RAM/BIST
AR330/D	High Density ECL Arrays EaseS ystem Implementation
AR332/D	CDA Array Papers
AR336/D	ASIC TAB Packaging Papers
AR337/D	Surface Mounting Tackles Fine Pitches
AR512/D	Gate Arrays Challenge Standard-Cell ASICs

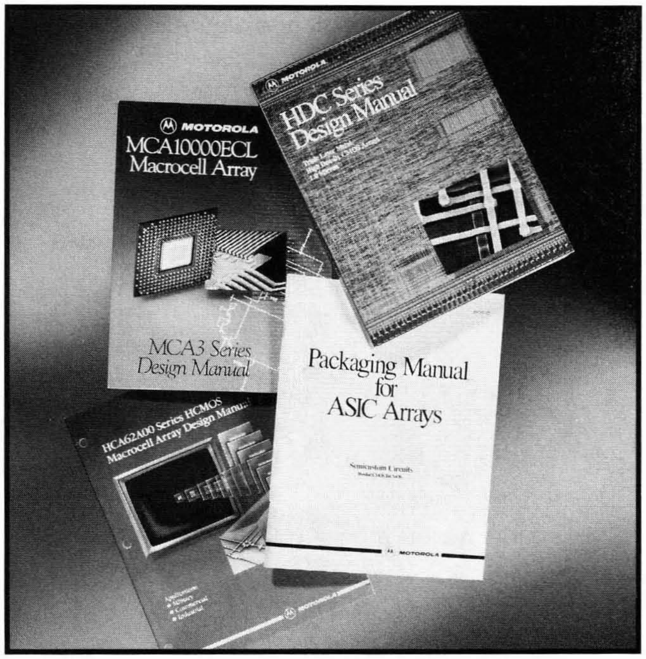

Technical documentation facilitates error-free silicon design.

*Contact Product Marketing (602) 821-4250

MUSCLE: Mixed-Mode Unified Scalable Cell Library Elements

Motorola's MUSCLE Families of CMOS standard cells feature a common but diversified set of digital, high-performance analog, and customized memory cells based on unified design rules that allow confident migration from 2.0μ to 0.8μ. This semicustom program provides an unparalleled capability to design mixed-signal integrated circuits with state-of-the-art technologies that support market leadership products.

In 1990, this semicustom program attained an electrical AOQ of 3 ppm, a quality level that exceeded even Motorola's corporate goal of Six Sigma quality.

Basic Digital Cells

A large portfolio of digital cells offers standard SSI/MSI functions such as:

- Input, output, bidirectional, 3-state and open drain buffers with up to 48 mA drive capability
- Active input pull-up and pull-down devices
- Large variety of elementary and complex gates
- Multiplexers and multiplexer blocks
- Single and multiple latches
- Flip-flops with various features including scan/hold flip-flops
- Counters and counter building blocks
- Adder/subtracter blocks

Basic Analog Cells

Standard and high performance analog functions include cells with a wide range of specifications similar to the most popular analog ICs in the industry, such as:

- Analog switches with on-state resistance as low as 100 ohms
- Bandgap references, 1.2 V/2.5 V with power down capability
- Comparators with a variety of common mode ranges and power down capability
- Operational amplifiers featuring low offset, enhanced output drive capabilities and power down mode with 1 to 20 MHz unity gain bandwidth
- A variety of current sources and bias cells
- Crystal oscillator amplifiers with on-chip bias resistor and start-up capacitors
- Self-contained and 3-pin RC oscillators
- Power-on-reset with power supply glitch protection

Customized Memories

Extensive use of modern silicon compilation techniques allows the fast customization of RAM and ROM blocks, supported by CAD generators for schematic capture and simulation. RAMs can be configured to "m" words by "n" bits with "m" being any multiple of 16 up to 4K and "n" being any integer from 1 to 32. Thus, RAM blocks of up to 4K×32 can be generated. Worst case access times for a 256×8 RAM are ranging from 23 ns with MDA20 down to 11 ns with the MDA08.

ROMs can be configured to "m" words by "n" bits with "m" being any multiple of 128 up to 8K and "n" being any integer from 1 to 32. Thus, ROM blocks of up to 8K×32 can be customized with worst-case access times of 66 ns for the MDA20 down to 35 ns with the MDA08 for an 8K×8 ROM.

Programmable Logic Arrays

Motorola is developing a PLA supercell compiler as a component of our semicustom design capability. A PLA compiler provides benefits and advantages which make it an indispensable part of our standard cell library:

- Custom-tailored functions not available in a gate array solution
- Area-saving substitute for ROMs using ESPRESSO reduction
- 10:1 area advantage over combinational logic
- Support for state machine and logic synthesis tool users

Mixed-Signal Solutions

POWER–ON RESET	AND/OR NAND/NOR	OP AMPS	MULTIPLEXERS	ANALOG SWITCH	BUFFERS	VCOs
SWITCHES	A/Ds D/As	FLIP–FLOPS	BANDGAP REFERENCE	DECODERS	CONFIGURABLE ROM	MULTIPLIERS
RC OSCILLATORS	DELAY CELLS	CRYSTAL OSCILLATORS	OR/NOR EXOR/EXNOR	CONFIGURABLE RAM	ADDERS/ SUBTRACTERS	PLLs

A unique characteristic of PLAs is the "sum-of-products" logic function, which can be minimized using Boolean minimization algorithms such as UC Berkeley's ESPRESSO. By using "don't care" values to consolidate addresses that yield the same output vectors, a PLA can implement the same function as a ROM while using only a fraction of the silicon area.

Special Cells

In addition to the powerful range of cells in the MUSCLE library, Motorola works closely with major customers to develop enhanced solutions according to customer specifications. These enhanced solutions quite often result in design modifications to some existing cells or the development of entirely new cells that are incorporated into our existing library after thorough characterization. Examples of these modified or newly developed cells are:

- 80 mA high drive CMOS output cells
- Low offset comparators (typical 2 mV @ 25°C)
- Low power oscillators (<1 μA)
- LCD cells customized to specific display configurations
- LCD voltage reference cell
- LCD front/backplane drivers
- High performance video cells such as a 30 MHz gain bandwidth operational amplifier, an 8-bit differential DAC with <20 ns settling time, a 7-bit differential ADC with 14 MHz sampling, and a smooth differential 2:1 video multiplexer

JTAG Boundary Scan Cells

As a complement to the MUSCLE standard cell libraries, Motorola is developing scan cells that provide enhanced testability. Designed according to IEEE 1149.1, these scan cells include:

- Input/output
- Bypass register
- TAP controller, etc.

By use of both pad and core cells, and hard and soft macros, scan methodology can be tailored to both pad and core limited designs, making the most efficient use of silicon area. This allows the standard cell itself to be tested by scan techniques in addition to allowing the chip to be integrated into the designer's board/system test requirements.

CAD Support

Motorola has developed the "MUSCLE" family of standard cell libraries that are supported with software that integrates with the most advanced tools supplied by major CAD software vendors. These Motorola-developed CAD interface tools are resident in the Design Verification Module (DVM) kits that are provided to our customers on a magnetic medium. These DVM kits allow customers to perform netlisting, schematic capture, and functional simulations based on the CAD tools supported by either the Cadence Amadeus Framework or Mentor's Release 7.0. Our Amadeus DVM has been formed around industry-leading EDA products including Verilog-XL/Saber/HSPICE, Veritime, Verifault, Synopsys Test Compiler, SCS, TSSI, and Cell3 Ensemble. Motorola intends to also support Mentor's Release 8.0 software.

Scalability

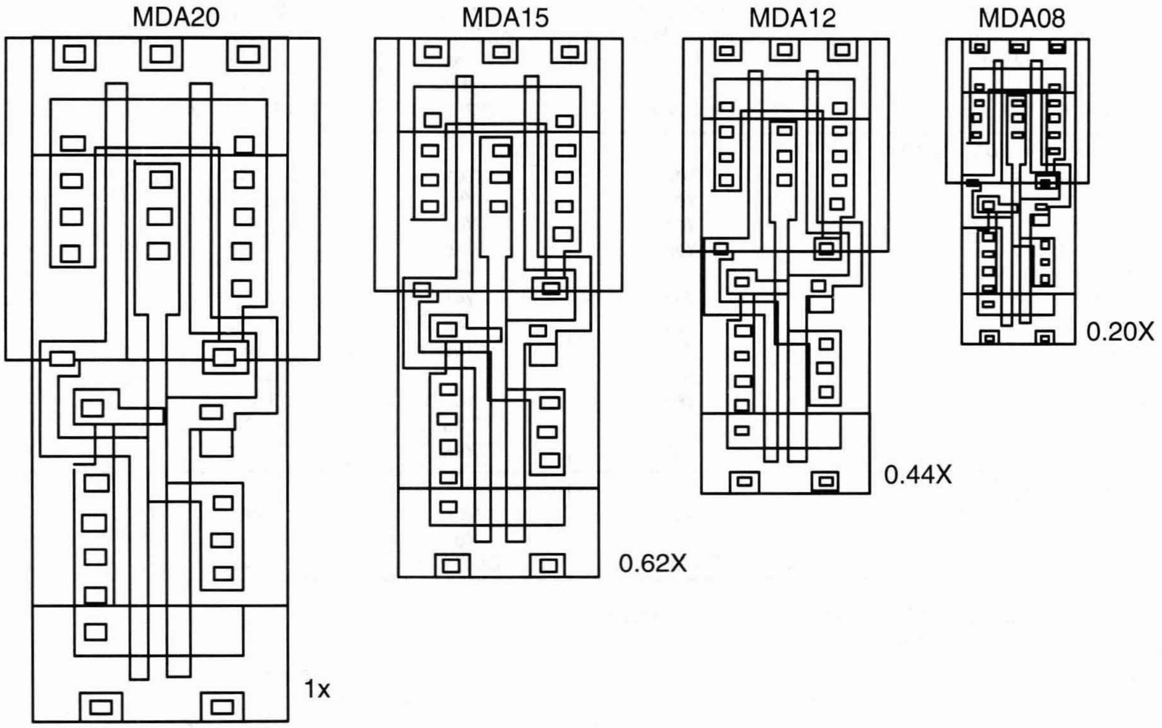

"MUSCLE" Family Characteristics

Description	MDA20	MDA15	MDA12	MDA08
Processing	2.0 μ N-Well	1.5 μ N-Well	1.2 μ N-Well	0.8 μ N-Well
Levels of Metal	2	2 and 3	3	3
Feature Size (Target Leff)	1.8 μ	1.25 μ	0.83 μ	0.75 μ
Estimated Maximum Die Size (sq mils)	160,000	160,000	160,000	160,000
Est. Power Dissipation (μW/MHz/gate)**	—	7.92/6.1	6.00/4.3	4.60/3.5
Maximum Number of Gates	20 k	60 k	80 k	175 k
Maximum System Frequency	≤ 50 MHz	≤ 65 MHz	≤ 80 MHz	> 100 MHz
D Flip-Flop Toggle Rate	59 MHz	98 MHz	177 MHz	> 200 MHz
Number of Base Digital/Analog Macros	115/26	120/46	120/6	140/63
Number of I/O Buffers	21	21	21	21
Number of Oscillator Macros	6	6	6	6
Operating Voltage	2.7 – 6.0 V	2.7 – 6.0 V	2.7 – 6.0 V	2.7 – 6.0 V
Typical Gate Delay (High to Low)***	0.55 ns	0.45 ns	0.33 ns	0.24 ns
Worst Case Delay (FO = 2, l = 2 mm)***	1.67 ns	0.84 ns	0.68 ns	0.43 ns
Maximum RAM Size	4K x 32	4K x 32	4K x 32	4K x 32
RAM Access Time	< 30 ns	< 25 ns	< 20 ns	< 15 ns
Maximum ROM Size	8K x 32	8K x 32	8K x 32	8K x 32
ROM Access Time	< 85 ns	< 60 ns	< 35 ns	< 25 ns
JTAG (1149.1 Compliance)	—	1Q92	—	1Q92
PLA Support (Inputs/Outputs/Minterms)	—	32/32/1000	—	32/32/1000
Supports Schmitt Trigger	Yes	Yes	Yes	Yes
Supports Transmission Gates	Yes	Yes	Yes	Yes
Temperature Characterization	– 55 to +125°C	– 55 to +125°C	– 55 to +125°C	– 55 to +125°C
Offers Scan Macros	Yes	Yes	Yes	Yes
Supported Workstation	HP – Apollo —	HP – Apollo/Sun DEC-Station	HP – Apollo —	HP – Apollo/Sun DEC-Station
Design Automation Support				
CAD Platform	Mentor/Tangent	Cadence/Mentor	Cadence/Mentor	Cadence/Mentor
Schematic Capture	NETED	Composer/NETED	Composer/NETED	Composer/NETED
Gate Level Simulation	Quicksim	Verilog/Quicksim	Verilog/Quicksim	Verilog/Quicksim
Compilers Supported	SCS and Cadence	SCS and Cadence	SCS and Cadence	SCS and Cadence
Design Rule Checking (DRC)	Dracula	Dracula	Dracula	Dracula
Transistor Level Simulator	HSPICE	HSPICE	HSPICE	HSPICE
Place and Route	TANCELL	TANCELL/Cell3	TANCELL/Cell3	TANCELL/Cell3
Analog Simulation	HSPICE/Saber	HSPICE/Saber	HSPICE/Saber	HSPICE/Saber
Logic Synthesis	N/A	Synopsys	Synopsys	Synopsys
Test Vector Development	—	TSSI	—	TSSI
Automatic Test Pattern Generation	Synopsys	Synopsys	Synopsys	Synopsys
Hardware Description Language (HDL)	Verilog HDL	Verilog HDL	Verilog HDL	Verilog HDL
Supported with a DVM Kit*	Yes	Yes	Yes	Yes
ESD Rating	> 4 kV	> 4 kV	> 4 kV	> 4 kV
Latchup Rating: Inputs/Outputs	150/300 mA	150/300 mA	150/300 mA	150/300 mA
Analog Macro Support				
Operational Amplifiers	Yes	Yes	No	Yes
Comparators	Yes	Yes	Limited	Yes
Bandgap Reference	Yes	Yes	No	Yes
A/D, D/A Converters	Yes	Yes	No	Yes
Current Bias Generators	Yes	Yes	No	Yes
Analog Switch	Yes	Yes	No	Yes
Crystal Oscillators	Yes	Yes	Limited	Yes
RC Oscillators	Yes	Yes	No	Yes
Current Sources	Yes	Yes	Limited	Yes
Power On Reset	Yes	Yes	Limited	Yes
NTSC Video Cells	No	Yes	No	Yes
VCOs/PLLs	No	Yes	No	Yes
Cell Library Availability				
Digital Only (Including Memory)	Now	Now	Now	Now
Digital and Analog	Now	Now	Now	2Q92
Data Book Order Number	DL149/D	DL152/D	DL153/D	DL154/D

* DVM = Design Verification Module for schematic capture and simulation.
** Worst case/typical based on fanout of 2 plus interconnect.
*** NAND2H.

Technologies supported for new design.

Amadeus, Cell3 Ensemble, Dracula, TANCELL, Composer, and Verilog are trademarks of Cadence Design Systems.
Falcon, NETED, and QuickSim are trademarks of Mentor Graphics.

Synopsys is a trademark of Synopsys, Inc.
Saber is a trademark of Analogy, Inc.
TSSI is a trademark of Test Systems Strategies, Inc.
HSPICE is a trademark of Meta-Software, Inc.
MUSCLE is a trademark of Motorola, Inc.

CAD Support Features

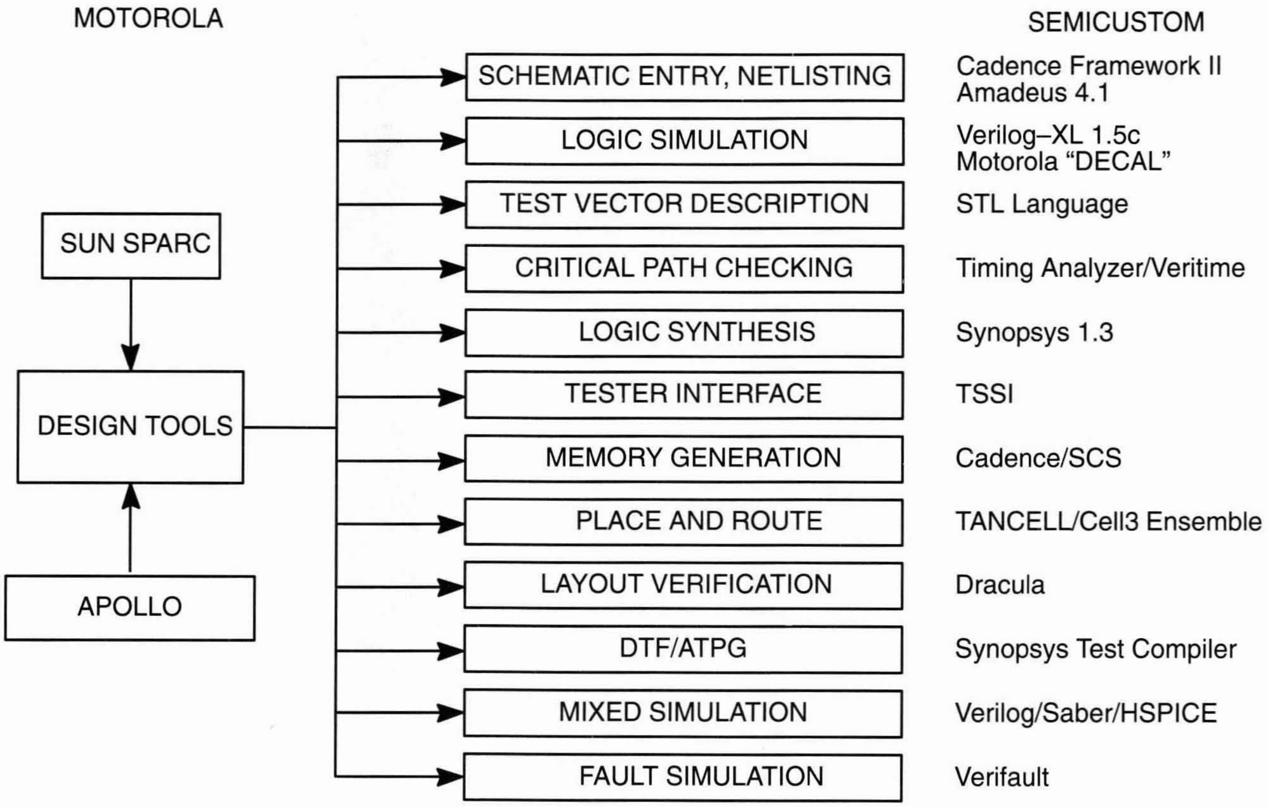

Front-End System Design

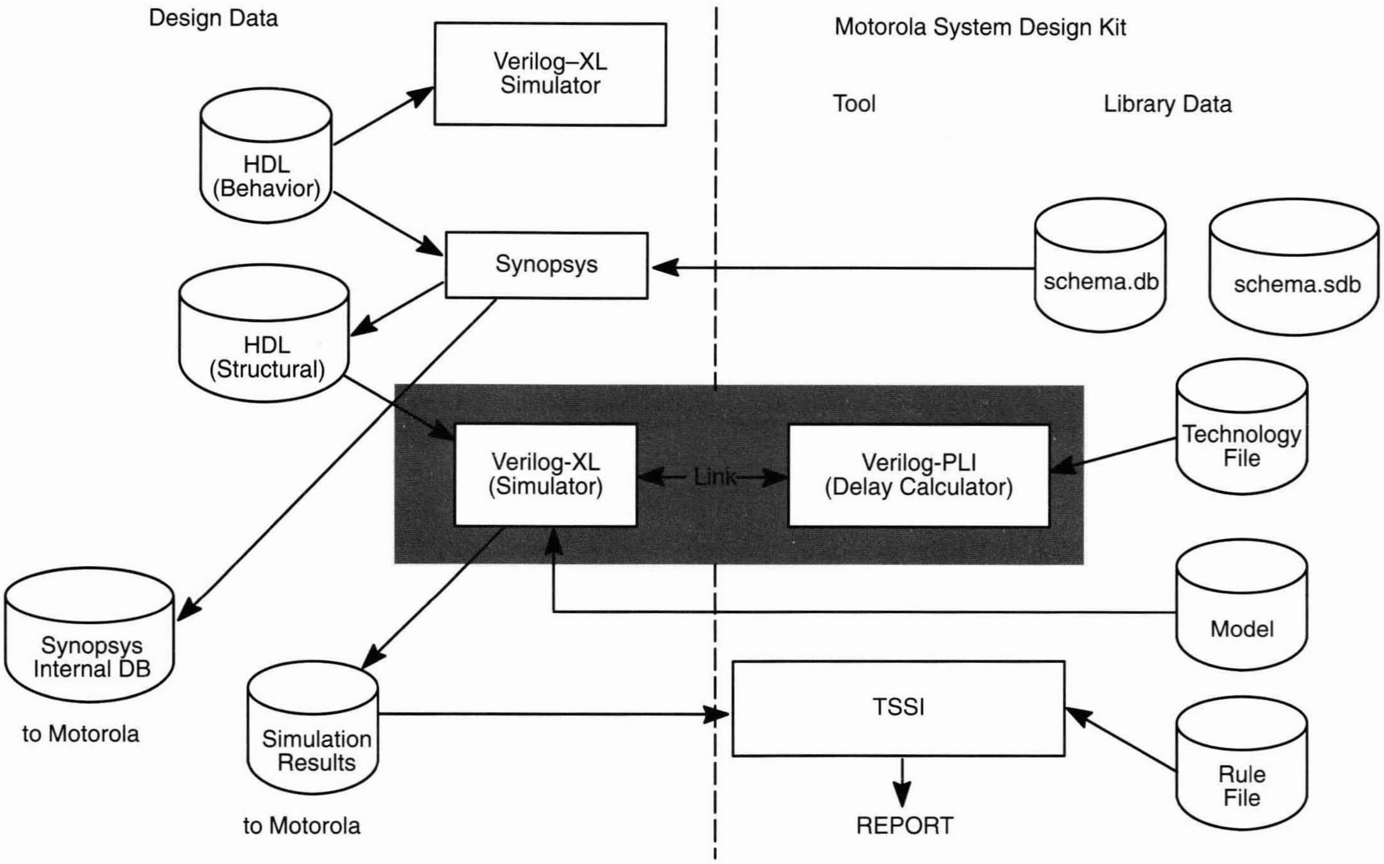

Microcomputer Components

In Brief . . .

Motorola continues to be a leading supplier of components for microcomputer systems. The product portfolio includes digital signal processors; CISC and RISC advanced microprocessors and complementary full-function peripherals; a comprehensive selection of high-performance microcontrollers; VLSI support functions for PC and Local Operating Network applications; and a broad range of fast static RAM and dynamic RAM chips and modules.

Our commitment is to provide state-of-the-art devices as well as continuing support of established products, with six-sigma quality and total customer satisfaction.

Page

Digital Signal Processors 2.1-1

The M68000 MPU Family 2.2-1

The M88000 RISC Family 2.3-1

Single-Chip Microcontrollers 2.4-1

PC Peripheral Products 2.5-1

Local Operating Network Products 2.6-1

MOS Memories 2-7.1

Digital Signal Processors

In Brief . . .

Drawing on both design excellence and expertise in manufacturing, Motorola has created a range of architecturally compatible Digital Signal Processing chips. The philosophy behind the DSP families has been to create compatibility between products as well as conformance to international standards.

Currently, Motorola addresses three main areas of DSP hardware: general purpose, algorithm specific processors and peripherals. Our general purpose processors include 16- and 24-bit fixed point and 32-bit floating point families.

In addition, we offer a comprehensive array of development tools to give the designer access to the full power and versatility of the DSPs with minimum fuss. All the tools were designed for ease of use and functionality. They provide a low-cost means of evaluation and greatly simplify the design and development phase of a DSP project.

Page

DSP56100–16-Bit 2.1-2
DSP56000–24-Bit 2.1-3
DSP96000–32-Bit 2.1-4
DSP Peripherals 2.1-5
DSP Development Tools 2.1-6
Development Software 2.1-7

Digital Signal Processors

16-/24-/32-bit Families — Your Complete DSP Solution

DSP56100 — 16-bit Digital Signal Processors

The DSP56100 family of HCMOS, low power, 16-bit fixed-point general purpose Digital Signal Processors (DSP) was designed primarily for speech coding, telecommunications and control applications. The first family member, the DSP56156, combines the high-speed 5616 core with 8k bytes of on-chip RAM, two serial ports, one parallel port, on-chip codec and phase-locked loop (PLL) plus the OnCE™ on-chip emulator.

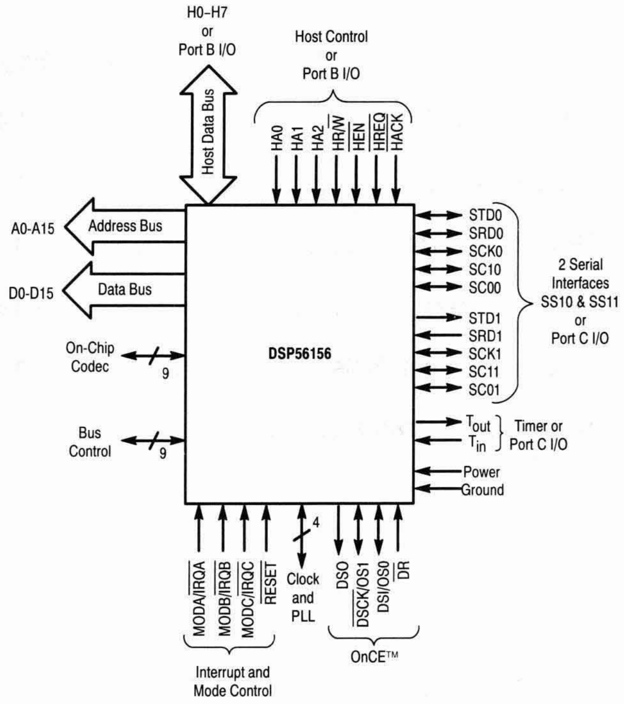

PART NUMBERS

Part	Description
XC56156FE40	40 MHz in CQFP

DSP56156 BENCHMARKS

Benchmark	Instruction Cycles
Real FIR Filter with Data Shift	1 per Tap
LMS Adaptive Real FIR Filter	2 per Tap
Double Integration Sinewave Generation	2 per Sample
Complex FIR Filter with Data Shift	4 per Tap
General Lattice Filter	4 per Tap
Real Cascaded IIR Biquad Filter Sections (4 coeff.)	5 per Section
PID Loop	5
Double Precision Multiply	6
[1×3][3×3] Matrix Multiplication	21

DSP56156 Features:

- 20 Million Instructions per Second (MIPS) — 50 ns instruction cycle at 40 MHz
- Single-cycle 16×16-bit parallel multiply-accumulator
- Two 40-bit accumulators including extension byte
- Fractional and integer arithmetic with support for multiprecision arithmetic
- Highly parallel instruction set with unique DSP addressing modes
- Nested hardware DO loops including infinite loops
- Zero-overhead fast interrupts (two instruction cycles)
- Three 16-bit internal data buses
- Three 16-bit internal address buses
- On-chip peripheral registers memory mapped in data memory space
- Low power Wait and Stop modes
- Operating frequency down to DC
- On-chip oscillator
- Single 5V power supply
- 2K×16-bit on-chip data RAM
- 2K×16-bit on-chip program RAM
- Bootstrap loading from external PROM, Host Interface or Synchronous Serial Interface 0 (SSI0)
- Synchronous memory expansion port (Port A) with 16-bit address and data buses
- 24 general purpose I/O pins
- Byte-wide Host Interface with DMA support
- Two independent synchronous serial interfaces
- Built in μ-law and A-law compression/expansion
- Up to 32 software selectable time slots in network mode
- 16-bit timer with external input/output
- On-Chip Emulation (OnCE™) for unobtrusive, processor speed independent debugging
- Hardware support for high-level languages
- Two instruction LMS adaptive filter loop
- On-chip codec
- Phase-locked loop frequency synthesizer

DSP56000 — 24-bit Digital Signal Processors

The DSP56000 family of 24-bit fixed-point general purpose DSPs feature three single-cycle execution units — the Data ALU, the Address Arithmetic Unit and the Program Controller — which operate in parallel at instruction speeds up to 16.5 MHz. X data, Y data and Program data memories are provided on–chip and each is expandable off-chip to provide up to 192K words of 24-bit data address space. The on-chip I/O is flexible, with two serial ports and a parallel Host. The high throughput of the DSP56000/1 makes them well-suited for communication, high-speed control, numeric processing and computer and audio applications.

The DSP56000 has on-chip Program and Data ROMs that can be factory customized. It has a run rate of 10.25 million instructions per second and a clock speed of 20.5 MHz.

The DSP56001 is a RAM-based version of the 56000. Due to its on-chip Program RAM, the 56001 is available off the shelf for immediate implementation. It includes two data ROMs containing MU-Law and A-Law tables and sine-wave generation tables and is available in the following speeds.

The DSP56001 (20.5 MHz) has a run rate of 10.25 MIPS. The DSP56001 (27 MHz) has a run rate of 13.5 MIPS. The DSP56001 (33 MHz) has a run rate of 16.5 MIPS.

The DSP56002 is a RAM-based version designed using the Universal Design Rules (UDR) and incorporating on-chip emulation (OnCE™). It has been introduced at 20 MIPS (40 MHz).

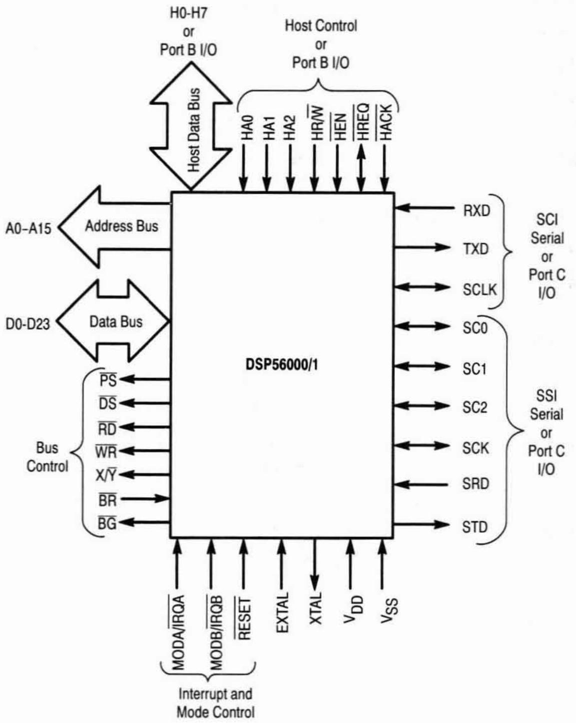

DSP56001 BENCHMARKS

Benchmark	Instruction Cycles
Real FIR Filter with Data Shift	1 per Tap
Two Dimensional Convolution (3×3 coeff. mask)	1 per Output

DSP56001 BENCHMARKS (continued)

Benchmark	Instruction Cycles
LMS Adaptive Real FIR Filter	3 per Tap
Real Cascaded IIR Biquad Filter Sections (4 coeff.)	4 per Section
Complex FIR Filter with Data Shift	4 per Tap
[1×3][3×3] Matrix Multiplication	17
Division	28
Leroux-Gueguen LPC Analysis:	
8th Order	473
10th Order	622
16th Order	1203
256-point Complex FFT	6613
1024-point Complex FFT	33120

DSP56001 Features:

- 16.5 Million Instructions per Second (MIPS) — 60 ns instruction cycle at 33 MHz
- 24×24→56-bit parallel multiply/accumulate
- Two 56-bit accumulators
- Linear, modulo and bit reversed address generation
- Nested hardware DO loops
- No overhead auto-return (fast) interrupts
- 62 MPU-style instruction types
- Suitable for high level language compilers
- On-chip MCU-style peripherals
  - 24 programmable I/O port pins
  - 8-bit parallel host MPU/DMA interface
  - Serial Communication Interface
  - Synchronous Serial (Codec) Interface
- On-chip memory
  - Two independent 256×24-bit data RAMs and ROMs
  - 512×24-bit program RAM (DSP56001)
- Off–chip memory expansion
  - 128K×24-bit data memory
  - 64K×24-bit program memory

PART NUMBERS

Part	Description
DSP56000RC20	20 MHz ROM-based in PGA
DSP56000FE20	20 MHz ROM-based in CQFP
DSP56001RC20	20 MHz RAM-based in PGA
DSP56001FE20	20 MHz RAM-based in CQFP
DSP56001FC20	20 MHz RAM-based in PQFP
DSP56001FD20	20 MHz RAM-based in PQFP
DSP56001RC27	27 MHz RAM-based in PGA
DSP56001FE27	27 MHz RAM-based in CQFP
DSP56001FC27	27 MHz RAM-based in PQFP
DSP56001FD27	27 MHz RAM-based in PQFP
DSP56001RC33	33 MHz RAM-based in PGA
DSP56001FE33	33 MHz RAM-based in CQFP
DSP56001FC33	33 MHz RAM-based in PQFP
DSP56001FD33	33 MHz RAM-based in PQFP
XC56002RC40	40 MHz RAM-based in PGA

DSP96000 — 32-bit IEEE Floating Point Dual-Port Processors

The DSP96000 is a family of single-chip, dual port, low-power, general purpose 32-bit IEEE floating-point DSPs. The central processing unit consists of three execution units operating in parallel: the Data ALU, the Address Generation Unit and the Program Control Unit. The DSP96002 has full architecture compatibility with the DSP56100 and DSP56000 families which allows for ease of design and programming when working on any Motorola DSP.

The DSP96002 has two identical memory expansion ports simplifying network configurations for multiprocessor and DSP96002 communications. These ports interface with SRAMs, DRAMs (operating in their fast access modes) and video RAMs. Each port can be transformed into a Host Interface which supports easy interfacing to other processors for multiprocessor applications.

The superior performance of the DSP96002 has allowed Motorola to designate it as the Media Engine™ processor. Although designed primarily for image processing, other applications include communication, spectrum analysis, instrumentation, speech processing and pattern recognition.

The DSP96002 is available in 33 MHz and 40 MHz.

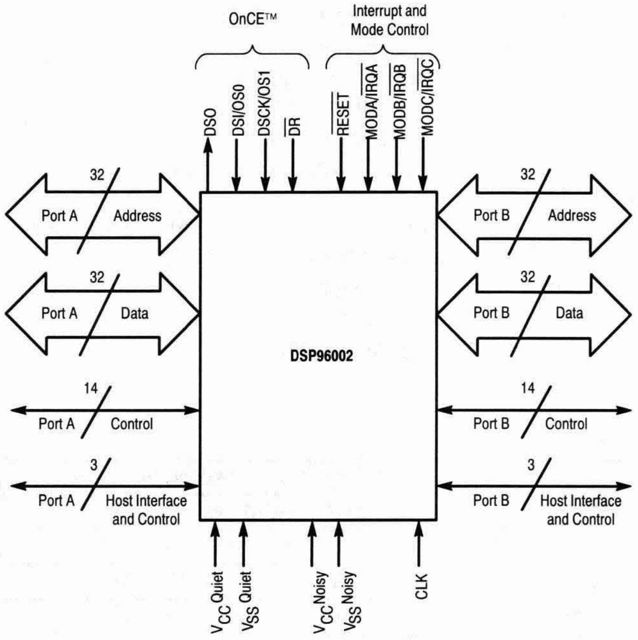

PART NUMBERS

Part	Description
XC96002RC33	33 MHz in PGA
XC96002RC40	40 MHz in PGA

DSP96002 BENCHMARKS

Benchmark	Instruction Cycles
Real	
FIR Filter with Data Shift	1 per Tap
V = V*S + V	2
Lattice Filter with Data Shift	3 per Tap
Cascaded IIR Biquad Filter Sections (4 coeff.)	4 per Section
1024-point FFT and bit reversal	12880
Complex	
V = V*V + V	4
FIR Filter with Data Shift	4 per Tap
1024-point FFT and bit reversal	20931
Graphics/Image Processing	
Divide (32-bit accuracy)	7
Square Root (32-bit accuracy)	12
Bezier Cubic Evaluation for Font Compilation	13
[4×4][4×4] = [4×4]	67

DSP96002 Features:

- IEEE 754 Standard SP (32-bit) and SEP (44-bit) arithmetic
- 20 Million Instructions per Second (MIPS) — 50 ns instrcution cycle at 40 MHz
- 60 Million Floating Point Instructions per Second (MFLOPS) peak with a 40 MHz clock
- Single-cycle 32×32-bit parallel multiplier
- Highly parallel instruction set with unique DSP addressing modes
- Nested hardware DO loops
- Fast auto-return interrupts
- Two independent on-chip 512×32-bit data RAMs
- Two independent on-chip 1024×32-bit data ROMs
- Off-chip expansion to 2×2^{32} 32-bit words of data memory
- On-chip 1024×32-bit program RAM
- On-chip 64×32-bit bootstrap ROM
- Off-chip expansion to 2^{32} 32-bit words of program memory
- Two identical external memory expansion ports
- On-chip 2-channel DMA controller
- On-chip emulation (OnCE) for unobtrusive, processor speed independent debugging

DSP Peripherals —

DSP56200 — The Cascadable Adaptive Finite Impulse Response Digital Filter

The DSP56200 is an algorithm-specific DSP peripheral designed to perform computationally-intensive tasks. Two principal algorithms are implemented on the DSP56200 making the primary functions finite impulse response (FIR) and adaptive FIR filtering. Its performance, features and simple interface with host microprocessors make the DSP56200 a natural solution for echo cancelling, noise cancelling, convolution, correlation and orthogonal transform applications.

Key Features:

- Low Power HCMOS
- 100 ns per tap throughput
- 256×16-bit data RAM
- 256×24-bit coefficient RAM
- 16×24-bit multiplier, 40-bit accumulation
- Three modes of Operation
  - — Single FIR filter
  - — Dual FIR filter
  - — Single adaptive FIR filter with dc tap and leakage control
- Programmable tap lengths
  - — 256 taps in single channel mode
  - — 128 taps per channel in dual mode
- Cascadable in single channel mode
- Programmable leakage and gain
- 8-bit I/O port with 7 control lines
- Scratch pad memory
- Power down mode

PART NUMBERS

Part	Description
XC56200LC10	10.5 MHz in Ceramic DIP

DSP56ADC16 — The Analog to Digital Converter

The DSP56ADC16 is a single-chip, linear analog-to-digital (A/D) converter. It is an ideal choice for high-performance digital audio systems, voice-bandwidth communication and control applications. It does not require antialiasing filters and sample-and-hold circuitry because they are an inherent part of the sigma-delta technology. The DSP56ADC16 can be easily interfaced to the DSP56001 and other host processors using its flexible serial interface.

Key Features:

- 16-bit output resolution at 100 kHz from FIR filter
- 12-bit output resolution at 400 kHz from Comb filter
- 96-dB dynamic range
- 90-dB signal-to-THD ratio
- 90-dB signal-to-noise ratio
- In-band ripple: <0.001 dB
- Maximum output sample rates:
  - — FIR filter — 100 kHz
  - — Comb filter — 400 kHz
- Maximum input sample rate is 6.4 MHz
- Maximum internal clock rate is 12.8 MHz
- DC stability is 10-bits
- Supply voltage is single +5V (±10%)
- Supply current is <100 mA
- Linear-phase analog front end and internal digital filters
- Simple serial interface to host microprocessors
- Fully differential inputs

PART NUMBERS

Part	Description
XC56ADC16S	16-bit in Ceramic DIP

DSP Development Tools —

Application Development Systems

Every member of the Motorola Family of 16, 24 and 32-bit DSPs is supported by a multi-component Application Development System (ADS) which acts as a tool for designing, debugging and evaluating real-time DSP target system equipment. The ADS simplifies evaluation of the user's prototype hardware/software product by making all of the essential timing and I/O circuitry easily accessible. Using an IBM PC™, Macintosh™ II or a SUN-3™ as a medium between the user and the DSP hardware significantly reduces the overall complexity and cost of development while increasing the capabilities of the system. With the ADS, DSP programs can be executed in real-time, single instruction traced or multiple instruction stepped with registers and/or memory block contents displayed. The ADS is fully compatible with the CLAS design-in software package for each product and may act as an accelerator for testing DSP algorithms.

Emulation capability is available for the DSP56000ADS with the addition of an emulator cable which plugs into the euro–card connector on the ADS board. The DSP56156ADS and DSP96002ADS offer an On-Chip Emulation (OnCE™) circuit for unobtrusive, processor speed independent debugging. The ADS takes full advantage of this circuit to allow the user non-intrusive control of the target.

General ADS Features:

Software —

- Single/multiple stepping through DSP object programs
- Conditional/unconditional software and hardware breakpoints
- Program patching using a single-line assembler/disassembler
- Session and/or command logging for later reference
- Loading and saving of files to/from ADM memory
- Macro command definition and execution
- Display enable/disable of registers and memory
- Debug commands which support multiple DSP development
- Hexadecimal/decimal/binary calculator
- Multiple input/output file access from DSP object programs
- On-line help screens for each command and register

Hardware —

- Full speed operation
- Multiple ADM support with programmable ADM addressing
- Stand-alone operation of ADM after initial development

DSP56156ADS Features:

- System commands from within ADS user interface program
- 16K words of configurable static RAM expandable to 64K words
- 2K words of EPROM with sockets expandable to 16K words
- Full support of multiple data memory maps
- 96-pin connector provides access to all DSP56156 pins

DSP56000ADS Features:

- Host operating system commands from within ADS user interface program
- 8K/32K words of configurable RAM for DSP56000/1 code development
- 96-pin euro-card connector for accessing all DSP56000/1 pins
- 1K words of monitor ROM expandable to 4K words
- Separate connectors for accessing serial or host/DMA ports

DSP96000ADS Features:

- System commands from within ADS user interface program
- 128K words of configurable static RAM expandable to 512K words
- 2K words of EPROM with sockets expandable to 64K words
- Full support of multiple data memory maps
- Two sets of 96-pin connectors provide access to all DSP96002 pins

PART NUMBERS

Development Systems	Host Machine
DSP56156ADSA	IBM PC™
DSP56156ADSB	Macintosh™II
DSP56156ADSC	SUN-3™
DSP56156ADSF	Sun-4™
DSP56000ADSA	IBM PC™
DSP56000ADSB	Macintosh™II
DSP56000ADSC	SUN-3™
DSP56000ADSF	Sun-4™
DSP56000ADSG	NeXT™
DSP96000ADSA	IBM PC™
DSP960000ADSB	Macintosh™II
DSP96000ADSC	SUN-3™
DSP96000ADSF	SUN-4™

Design-In Software Packages

The Simulator/Macro-Assembler/Linker/Librarian software package is a development system support tool. The Simulator program imitates the operation of the DSP on a clock-cycle by clock-cycle basis and gives an accurate measurement of code execution time. All on-chip peripheral operations, memory and register updates and exception processing activities may be functionally simulated.

The full-featured Macro Cross Assembler translates one or more source files containing instruction mnemonics, operands and assembler directives into a Common Object File Format (COFF) file which is directly loadable by the Simulator. It supports the full instruction set, memory spaces and parallel transfer fields of the DSP.

The Linker relocates and links relocatable COFF object modules from the Assembler to create an absolute load file which can be loaded directly into the Simulator. The Librarian utility will merge separate, relocatable object modules into a single file allowing frequently used modules to be grouped for convenient linking and storing.

Each package is available in three versions depending upon the Host machine that will be used. The available options are for an IBM PC, Macintosh II, SUN-3, SUN-4, or NeXT workstation.

PART NUMBERS

Simulator/Assembler/ Linker/Library	Host Machine
DSP56116CLASA	IBM PC™
DSP56116CLASB	Macintosh™II
DSP56116CLASC	SUN-3™
DSP56116CLASF	SUN-4™
DSP56116CLASG	NeXT™
DSP56000CLASA	IBM PC™
DSP56000CLASB	Macintosh™II
DSP56000CLASC	SUN-3™
DSP56000CLASF	SUN-4™
DSP56000CLASG	NeXT™
DSP96000CLASA	IBM PC™
DSP96000CLASB	Macintosh™II
DSP96000CLASC	SUN-3™
DSP96000CLASF	SUN-4™
DSP96000CLASG	NeXT™

NEW C-Compiler Packages

A full ANSI C compliant compiler, based on GNU technology, provides higher efficiency and implements more than 20 major optimization techniques. It has improved in-line assembly capability and an ANSI C preprocessor. The package includes the C Compiler, a new COFF Assembler, Linker, complete ANSI C Libraries and a new C source level debugger as well as expanded user's reference manual. The software package is available for various host computers listed below.

PART NUMBERS

GNU C Compiler	Host Machine
DSP56000/1	
DSP56KCCA	IBM PC™ 386
DSP56KCCC	SUN-3™
DSP56KCCF	SUN-4™
DSP56KCCG	NeXT™
DSP96002	
DSP96KCCA	IBM PC™ 386
DSP96KCCC	SUN-3™
DSP96KCCF	SUN-4™
DSP96KCCG	NeXT™

C-Compiler Upgrades

Registered users of the earlier versions of the Motorola DSP C compiler can upgrade to the new GNU C compiler for $120. To order, contact a Motorola sales representative or distributor. Have your registration number ready.

PART NUMBERS

GNU C Compiler	Host Machine
DSP56000/1	
DSP56KCCAJ	IBM PC™
DSP56KCCCJ	SUN-3™
DSP56KCCFJ	SUN-4™
DSP56KCCGJ	NeXT™

IBM PC is a trademark of International Business Machines.
Macintosh is a trademark of Apple Computer, Inc.
NeXT is a trademark of NeXT Computer, Inc.
SUN-3 and SUN-4 are trademarks of Sun Microsystems, Inc.

The M68000 MPU Family

. . . the upward compatible 8-/16-/32-Bit Microprocessor Family

In Brief . . .

An MPU For All Functions

To designers of the most advanced microcomputer systems, the Motorola M68000 Family of microprocessors need no introduction. Products based on its members have become the standard for systems utilizing the UNIX operating system and for CAD/CAM engineering workstations. They are invading the next generation designs of personal computers and color graphics systems, and they find widespread implementation in multi-user/multi-tasking applications and in small business systems. M68000 MPUs are found in the leading products in fault-tolerant systems requiring high performance and parallel processing, and they are the preferred components for artificial intelligence engines requiring large linear addressing capabilities. Control applications include graphics, numerical controllers, robotics, telecommunications switching and PBX voice/data transmission.

Upward Compatibility

The M68000 MPU Family consists of a line of processors based on a 32-bit flexible register set, a large linear address space, a simple yet powerful instruction set and flexible addressing modes. The internal architecture of the 8-, 16-, and 32-bit MPU versions, and the common instruction set, provide software compatibility and offer an easy upward migration path for products requiring increasing levels of processing power.

A Host of Peripherals

A large selection of full-function peripheral chips complements the processor family. Compatible LSI and VLSI chips for memory management, data communications, DMA control, network control, system interfacing, general I/O and graphics, all simplify system design and reduce design and manufacturing cost while improving system performance.

Page

Microprocessors 2.2-2
Integrated Processors 2.2-4
Coprocessors 2.2-5
DMA Controllers 2.2-5
Network Devices 2.2-5
Data Communication Devices 2.2-7
General Purpose I/O 2.2-7
Fiber Distributed Data Interface 2.2-7
Development Tools 2.2-8
Support Software 2.2-8

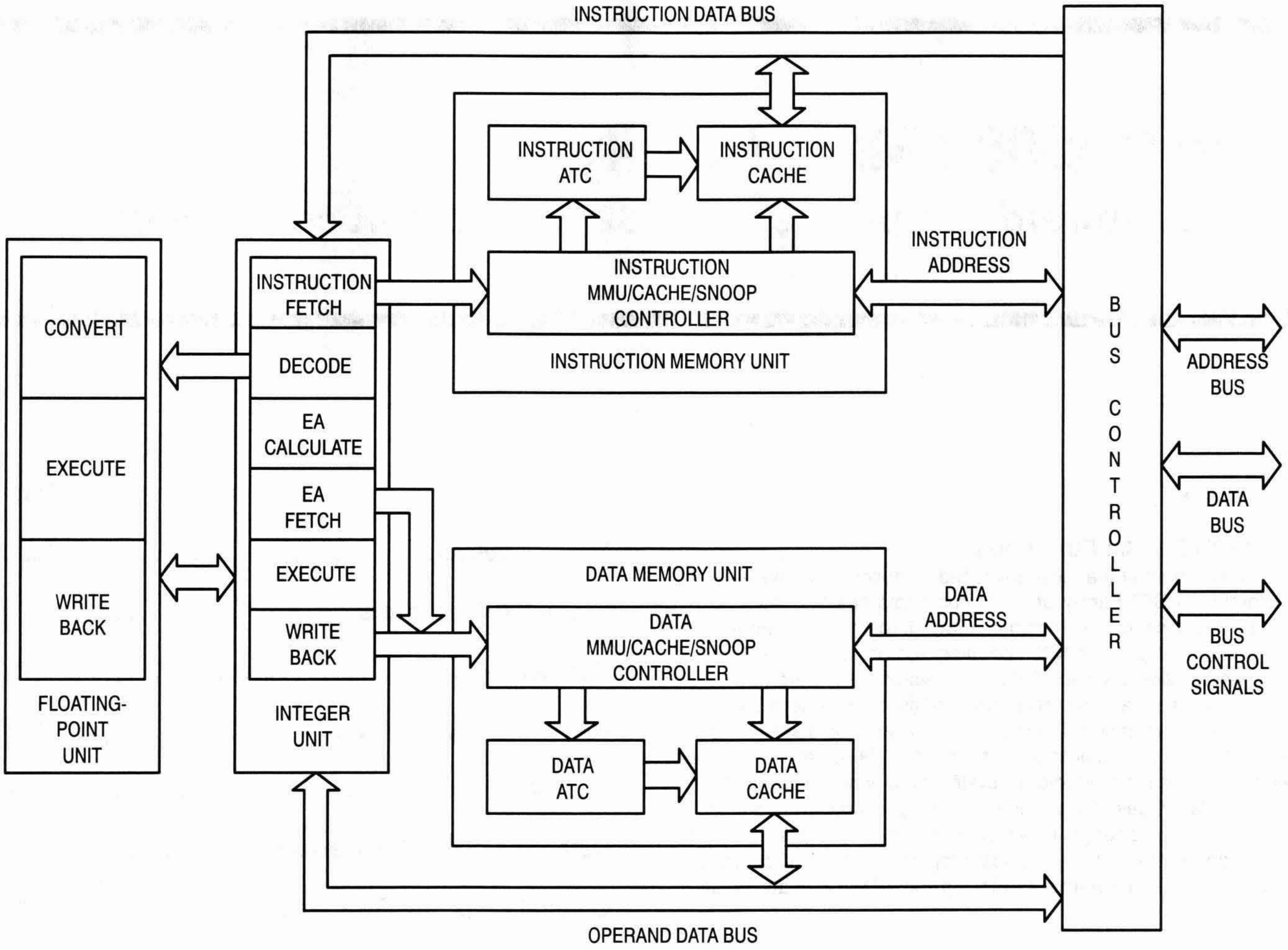

MC68040 — Block Diagram

MC68040
Third-Generation 32-Bit Microprocessor

The MC68040 is Motorola's third generation of M68000-compatible, high-performance, 32-bit microprocessors. The MC68040 is a virtual memory microprocessor employing multiple, concurrent execution units and a highly integrated architecture to provide very high performance in a monolithic HCMOS device. On a single chip, the MC68040 integrates an MC68030-compatible integer unit, an IEEE 754-compatible floating-point unit (FPU), and fully independent instruction and data demand-paged memory management units (MMUs), including independent 4K-byte instruction and data caches. A high degree of instruction execution parallelism is achieved through the use of multiple independent execution pipelines, multiple internal buses, and a full internal Harvard architecture, including separate physical caches for both instruction and data accesses. The MC68040 also directly supports cache coherency in multimaster applications with dedicated on-chip bus snooping logic.

The MC68040 is an enhanced, 32-bit, HCMOS microprocessor that combines the integer unit processing capabilities of the MC68030 microprocessor with independent 4K-byte data and instruction caches and an on-chip FPU. The MC68040 maintains the 32-bit registers available with the entire M68000 Family as well as the 32-bit address and data paths, rich instruction set, and versatile addressing modes. Instruction execution proceeds in parallel with accesses to the internal caches, MMU operations, and bus controller activity. Additionally, the integer unit is optimized for high-level language environments.The MC68040 is user-object-code compatible with previous members of the M68000 Family and is specifically optimized to reduce the execution time of compiler-generated code. The MC68040 is implemented in Motorola's latest HCMOS technology, providing an ideal balance between speed, power, and physical device size.

Instruction execution is pipelined in both the integer unit and FPU. Independent data and instruction MMUs control the main caches and the address translation caches (ATCs). The ATCs speed up logical-to-physical

address translations by storing recently used translations. The bus snooper circuit ensures cache coherency in multimaster and multiprocessing applications. The MC68040 FPU is user-object-code compatible with the MC68882 floating-point coprocessor. The FPU has been optimized to execute the most commonly used subset of the MC68882 instruction set, and includes additional instruction formats for single- and double-precision rounding of results.

The MMUs support multiprocessing, virtual memory systems by translating logical addresses to physical addresses using translation tables stored in memory. Each MMU has two transparent translation registers available that define a one-to-one mapping for address space segments ranging in size from 16 Mbytes to 4 Gbytes each. The instruction and data caches operate independently from the rest of the machine, storing information for fast access by the execution units. Each cache resides on its own internal address bus and internal data bus, allowing simultaneous access to both. The data cache provides writethrough or copyback write modes that can be configured on a page-by-page basis.

The MC68040 bus controller supports a high-speed, nonmultiplexed, synchronous external bus interface, which allows the following transfer sizes: byte, word (2 bytes), long word (4 bytes), and line (16 bytes). Line accesses are performed using burst transfers for both reads and writes to provide high data transfer rates.

MC68030RC,RL,RP,FE
The Second Generation 32-Bit MPU

The 030 started with a high performance 020 core and added many performance improvement features including increased internal parallelism, dual on-chip caches with a burst fillable mode, dual internal data and address buses, improved bus interface, and on-chip paged memory management unit.

Two independent 32-bit address buses and two 32-bit data buses allow the CPU, caches, MMU, and the bus controller to operate in parallel, so the 030 can, for example, simultaneously access an instruction from the instruction cache, data from the data cache and instruction/data from external memory.

Performance is further enhanced by on-chip instruction and data caches. Separate 256-byte data and instruction caches reduce the access time and increase CPU throughput by providing data and instructions on-chip.

Overall bus requirements are reduced and multiple processors can run more efficiently thanks to increased bandwidth of the 030 bus, achieved by the enhanced bus controller allowing high speed fills of both data and instruction caches.

The on-chip paged memory management unit translates logical address to the corresponding physical addresses in 1/2 the time required by the 020 and MC68851 Paged Memory Management Unit. Pipelining permits this translation to be performed in parallel with other functions so that no translation time is added to any bus cycle.

MC68EC030RP
32-Bit Enhanced Embedded Controller

The MC68EC030 is a 32-bit embedded controller that streamlines the functionality of an MC68030 for the requirements of embedded control applications. The MC68EC030 is optimized to maintain performance while using cost-effective memory subsystems. The rich instruction set and addressing mode capabilities of the MC68020, MC68030, and MC68040 have been maintained, allowing a clear migration path for M68000 systems. The MC68EC030 is object-code compatible with the MC68020, MC68030, and earlier M68000 microprocessors. Burst-mode bus interface is provided for efficient DRAM access.

The MC68EC030 has an on-chip data cache and on-chip instruction cache with 256 bytes each. Dynamic bus sizing is available for direct interfacing to 8-, 16-, and 32-Bit Devices. The EC030 is available in 25- and 40-MHz operating frequency providing up to 9.2 MIPS. The MC68EC030 includes 32-bit nonmultiplexed address and data buses, sixteen 32-bit general-purpose data and address registers, and two 32-bit supervisor stack pointers and eight special-purpose control registers. The EC030 provides complete support for coprocessors with the M68000 coprocessor interface. There is two access control registers that allow blocks to be defined for cacheability protection. The pipelined architecture, along with increased parallelism, allows internal caches accesses in parallel with bus transfers and overlapped instruction execution. The enhanced bus controller supports asynchronous bus cycles (three clocks minimum), synchronous bus cycles (two clocks minimum), and burst data transfers (one clock).

MC68020RC,RL,RP,FC,FE
The Original 32-Bit Performance Standard

The MC68020, oh twenty, is the industry's leading 32-bit microprocessor because of high performance, architecture, ease of design-in, and long-range compatible growth path.

The 020 has a full 32-bit internal and 32-bit external, regular, symmetrical architecture designed with the customer in mind. It offers all the functionality of the other M68000 Family MPUs, and maintains software user-code compatibility which controls the expense of your product migration.

Programmers appreciate the large general purpose register set, simple yet powerful instruction set and the many flexible M68000 addressing modes. The unique on-chip instruction cache heps provide burst-mode operation to 12.5 MIPS.

The 020 is the proven leader in high performance systems in office automation, engineering workstations, fault tolerant computers, parallel processors, telephone switching systems, and intelligent controllers.

See package suffix definitions on page 2-18.

MC68010LC,P,R,RC,FN
A Virtual Memory Enhancement

The MC68010 offers the advantage of Virtual Memory. A high-speed loop mode operation executes tight software loops faster to enhance performance. Its instruction continuation feature has made it the choice for fault-tolerant and parallel processing systems. The MC68010 can support a governing operating system which handles the supervisory chores of any number of subordinate operating systems.

MC68HC000LC,P,R,RC,FN,FC
A Micropower Alternative

HCMOS design gives the MC68HC000 all the functions and performance of its MC68000 predecessors . . . at one-tenth of the operating power requirements. With a maximum power dissipation of only 0.175 watts, the MC68HC000 is ideal for high-performance computer peripherals, industrial controllers, instrumentation and communications equipment.

MC68HC001RC,FN,FC
Low Power HCMOS 8-/16-/32-Bit Microprocessor

The MC68HC001 provides a functional extension of the MC68HC000 HCMOS 16-/32-bit microprocessor with the addition of statically selectable 8- or 16-bit data bus operation. The MC68HC001 is object-code compatible with the MC68HC000, and code written for the MC68HC001 can be migrated without modification to any member of the M68000 Family. This is possible because the user programming model is identical for all members of the M68000 Family and the instruction sets are proper subsets for the complete architecture.

MC68000L,LC,P,R,RC,FN
The 16-Bit Foundations

As the first member of the M68000 family, the state-of-the-art technology and advance circuit design concepts of the MC68000 16-bit MPU started a new trend in microprocessor architecture. Its seventeen 32-bit data and address registers permit rapid internal execution of its powerful yet simple instruction set. It is designed for large multiprocessing systems and real-time applications with vectored interrupts, seven priority levels and a 16 megabyte linear addressing space. It offers mainframe-like performance, supporting high-level languages and sophisticated operating systems.

The MC68000 MPU has been joined by more advanced products with even greater capabilities, yet it satisfies a large segment of the existing applications. It is extremely cost competitive and it remains one of the major growth products in the entire MPU line.

MC68008LC,P,FN
An 8-Bit Compatible Competitor

With an 8-bit data bus and 32-bit internal architecture, the MC68008 offers performance that competes with a number of 16-bit MPUs. It has the same register set, same instructions, and the same functionality as the MC68000 with extensive exception processing. Large modular programs can be developed and executed efficiently because of the large, 1-megabit non-segmented, linear address space. It is the choice for high performance, cost effective, 8-bit designs, particularly those requiring a migration path to 16-bit or full 32-bit operation.

Integrated Processors

MC68302RC,FE
Integrated Multiprotocol Processor

The MC68302 integrated multiprotocol processor (IMP) is a very large-scale integration (VLSI) device incorporating the main building blocks needed for the design of a wide variety of controllers used in the communications industry. The IMP is the first device to offer the benefits of a closely coupled, industry-standard M68000/MC68008 microprocessor core and a flexible communications architecture. The three-channel communications device may be configured to support a number of popular industry interfaces, including those for the Integrated Services Digital Network (ISDN) basic rate and terminal adaptor applications. Through a combination of architectural and programmable features concurrent operation of different protocols (HDLC/SDLC™, UART, BISYNC, DDCMP™, or transparent modes) can easily be achieved. Data concentrators, modems, line cards, bridges, and gateways are examples of suitable applications for this device

The IMP is a complementary metal-oxide semiconductor (CMOS) device consisting of an M68000/MC68008 microprocessor core, a system integration block (SIB), and a communications processor (CP). By integrating the microprocessor core with the serial ports (in the CP) and the system peripherals (in the SIB), the IMP is capable of handling complex tasks such as all ISDN basic rate (2B+D) access tasks.

MC68340RP,FE
Integrated Processor with DMA

The MC68340 is a high-performance 32-bit integrated processor with direct memory access (IPD), combining an enhanced M68000-compatible processor, 32-bit direct memory access (DMA), and other peripheral subsystems in a single package. The combination of peripherals offered in the MC68340 is found in most

See package suffix definitions on page 2-18.

MC68340RP,FE (continued)

microprocessor-based systems and in a diverse range of applications, including embedded control and general computing. Applications requiring very high-speed DMA transfers will especially benefit from the MC68340. For all applications, the high level of functional integration results in significant reductions in component count, power consumption, board space, and cost while yielding much higher system reliability and shorter design time.

The MC68340 includes the Central Processor Unit (CPU), where most of the data manipulation and decisions are made, and a DMA controller for independently moving large blocks of data around memory or between memory and peripherals. Both of these in a single chip, the MC68340 IPD comprises many of these common elements of a digital system. Each element is designed to operate with the other elements of the chip at peak efficiency: all talking together over the same bus; all synchronized with the same signals; all running at the same high speed. The resulting chip allows system designers to more quickly develop their specific product since a major portion of their hardware design has been completed. Since much of the system is supplied in the MC68340, many smaller applications need only to add the memory system. All that remains is to program the hardware to perform the desired tasks.

Coprocessors

MC68851RC
Paged Memory Management Unit, PMMU

The PMMU is a 32-bit memory manager which provides full support for a demand paged virtual environment with the 68010 or MC68020. It supports a 4-gigabyte addressing space when used as a coprocessor with the MC68020. It supports a 4-gigabyte addressing space when used as a coprocessor with the MC68020. An on-chip address translation cache minimizes translation delays and maximizes system performance.

MC68881RC,FN
A Floating Point Coprocessor

Designed specifically for arithmetic expansion of the MC68020 MPUI, this powerful coprocessor can also be used as a peripheral to all other M68000 family members, and with non-M68000 processors as well. It performs floating point math calculations in strict conformance to a full implementation of the IEEE Standard for Binary Floating Point Arithmetic (754) and, in addition to the basic add, subtract, multiply, and divide functions, it handles full selection of transcendental and non-transcendental operations. These operations include root values, trigonometric functions, exponentials, hyperbolics, and logs. All functions are calculated to 80 bits of extended precision in hardware.

MC68882RC,FN
Enhanced Floating Point Coprocessor

The MC68882 is pin-to-pin hardware and software compatible with the MC68881 Floating Point Coprocessor and implements a variety of performance enhancements including dual-ported registers and an advanced pipeline. Additional circuitry allows execution of multiple instructions in parallel for more than twice the Floating Point performance of the trail-blazing MC68881. Where higher performance requirements indicate, the MC68882 is a drop-in replacement for the MC68881.

DMA Controllers

MC68450L,R,RC
DMA Controller DMAC

The DMAC maintains high-performance data movement for complex M68000 MPU-based systems. While pin compatible with the MC68440 DDMA, the DMAC offers four completely independent DMA channels. In addition to all the features of the DDMA, the DMAC also provides very sophisticated manipulation of data through sequential and linked array-chained addressing capabilities.

MC68440L,P,R,FN
Dual Direct Memory Access Controller, DDMA

The DDMA complements the performance capabilities of M68000 microprocessors by moving blocks of data in a quick, efficient manner with a minimum of intervention from the MPU. The DDMA performs memory-to-memory, peripheral-to-memory, and memory-to-peripheral transfers through each of two completely independent DMA channels. The DDMA also offers two interrupt vectors per channel and supports both 8-bit and 16-bit data transfers.

Network Devices

MC68824RC,R,FN
Token Bus Controller, TBC

The TBC is the industry's first single-chip VLSI device to implement the IEEE 802.4 Media Access Control Sublayer of the ISO Data Link Layer, as specified by General Motors Manufacturing Automation Protocol, MAP. The TBC supports serial data rates of 1, 5, and 10 Mbps and relieves the host processor of the frame formatting and token management functions. For efficient transfer of data frames, to and from memory, the TBC features an on-chip four-channel DMA with bus master capability, a 32-bit address range, an 8- or 16-bit data bus, and a 40-byte FIFO. The MC68824 also offers support options for network bridges, real-time support and network monitoring services.

See package suffix definitions on page 2-18.

MC68184P
Broadband Interface Controller

The MC68184 broadband interface controller (BIC) is a high-performance interface device for use with the MC68824 token bus controller (TBC) to implement the digital portion of the physical layer of a broadband IEEE 802.4 token bus node. The BIC manipulates both data and control for RF transmitter circuitry and RF receiver circuitry. The CMOS BIC supports data rates up to 10 Mbps using a duo-binary modulation technique and provides 20 lines for receiver/transmitter control with 13 user-defined outputs.

The BIC performs the digital functions of the physical layer when implementing a broadband token bus node. The modem side of the BIC provides data and control for the RF transmitter/receiver circuitry. A standard serial interface is used to connect the BIC to the MC68824 TBC. The TBC performs the media access control (MAC) function. The MC68184 has the ability to scramble and descramble data.

MC68185RC,FN
Twisted-Pair Modem

The MC68185 twisted-pair modem (TPM) is used in conjunction with a MC68824 token pus controller (TBC), an RS485 transceiver, and a twisted-pair media to implement a low-cost area network (LAN). The MC68824 TBC implements the layer 2 media access control (MAC) portion of the IEEE 802.4 LAN station and receiver portion for the IEEE 802.2 logical link control (LLC) type 3 as well as providing support for LLC type 1 and type 2. The TPM interfaces directly to the TBC, providing physical layer management, including MAC symbol encoding/decoding at data rates up to 2 Mbps.

The TPM contains an 32 kHz to 20 MHz on-chip crystal oscillator that generates a transmit clock without external circuitry. The physical layer management includes local loopback mode, transmitter enable, and reset. An on-chip digital filter provides for noise reduction of received data.

MC68194RC,FN
Carrierband Modem

The bipolar LSI MC68194 carrierband modem (CBM), when combined with the MC68824 token bus controller (TBC), provides an IEEE 802.4 single-channel, phase-coherent carrierband, local area network (LAN) connection. The CBM performs the physical layer function, including symbol encoding/decoding, signal transmission and reception, and physical management.

The CBM provides the three basic functions of the physical layer: data transmission to the coaxial cable, data reception from the cable, and management of the physical layer. For standard data mode (also called MAC mode), the CBM receives a serial transmit data stream from the TBC (called symbols or atomic symbols), encodes, modulates the carrier, and transmits the signal to the coaxial cable. Also in the data mode, the CBM receives a signal from the cable, demodulates the signal, recovers the data, and sends the received data symbols to the TBC. End-of-transmission receiver blanking as required by IEEE 802.4 is supported. Communication between the TBC and CBM is through a standardized serial interface consistent with the IEEE 802.4 DTE-DCE interface.

MC68195FN
LocalTalk Adaptor

The MC68195 LocalTalk adaptor (LA) is used in conjunction with the MC68302 integrated multiprotocol processor (IMP) to build a network interface to LocalTalk™, also known as AppleTalk™. LocalTalk refers to the 230.4-kbps local area network (LAN) that connects multiple MacIntosh™ computers and printers.

The LA provides LocalTalk support for any two of the three IMP serial channels. Combinations of multiple LA and/or IMP devices may be used to support additional LocalTalk channels. Non-LocalTalk applications can use the LA device with the IMP to build proprietary HDLC-based LANs at up to 2.5 Mbps using bi-phase space (FM0) encoding.

MC68605RC,R,FN
X.25 Protocol Controller, XPC

The XPC implements the 1984 CCITT X.25 Recommendation Data Link Procedure (level 2) LAPB. In addition to handling the lower level communications functions (HDLC framing, CRC generation/checking, and zero insertion/deletion), the XPC also independently handles higher level communications functions (frame sequencing, retransmission, flow control, retries limit and timeout conditions). This allows the host to operate almost totally isolated from the task of ensuring error-free transmission and reception of data.

MC68606RC,FN
Multi-Link LAPD Controller CCITT Q.920/Q.921, LAPD

The MC68606 Multi-link LAPD (MLAPD) Protocol Controller fully implements CCITT Recommendation Q.920/Q.921 Link Layer Access Procedure (LAPD) protocol for ISDN networks. The MLAPD is designed to handle both signalling and data links in high-performance ISDN primary rate applications.

This VLSI device provides a cost-effective solution to ISDN link-level processing with simultaneous support for up to 8K logical links. The MC68606 is an intelligent communications protocol controller compatible with AT&T specifications for ISDN devices and features low power consumption and high performance, with an aggregate data rate in excess of 2.048 Mbps.

See package suffix definitions on page 2-18.

Data Communication Devices

MC68681P,L,FN
MC2681L,P,FN
Dual Universal Asynchronous Receiver/Transmitter, DUART

The MC68681 features two completely independent full-duplex asynchronous receiver/transmitter channels that interface directly to the M68000 microprocessor bus. Receiver data registers are quadruple buffered and transmitter data registers are double buffered for minimum MPU intervention. Each has its own independently selectable baud rate. Multifunction 6-bit input port and 8-bit output port, a 16-bit programmable counter/timer, interrupt handling capabilities, and a maximum one-megabyte per second transfer rate make the DUART an extremely powerful device for complex data communication applications. Full device functionality with an M6800 bus interface is provided by the MC2681.

MC68661P
MC2661P
Enhanced Peripheral Communication Interface, EPCI

The EPCI is a universal synchronous/asynchronous data communications controller that interfaces to the M68000 Family and most other 8- or 16-bit microprocessors. Its receiver and transmitter are double buffered for efficient full- and half-duplex operation. An internal baud rate clock (with various baud rate sets available) eliminates the need for a system clock. The EPCI converts parallel data characters accepted from the microprocessor data bus into transmit-serial data. Simultaneously, the EPCI can convert receive-serial data to parallel data characters for input to the MPU.

General Purpose I/O

MC68230LC,P,FN
Parallel Interface/Timer, PI/T

The PI/T provides versatile double-buffered parallel interfaces and a system-oriented timer for M68000 systems. The parallel interfaces operate either in a unidirectional or bidirectional mode, either 8- or 16-bit wide. The timer is 24 bits with full programmability and a 5-bit prescaler. The PI/T has a complete M68000 bus interface and is fully compatible with the MC68450 DMAC.

MC68901LC,P,FN
Multifunction Peripheral, MFP

The MFP provides basic microcomputer function requirements as a single companion chip to the M68000 Family of Micorprocessors. Features provided via a direct M68000 system bus interface include a full-function, single-channel universal serial asynchronous receiver/transmitter (USART) for data communication, an 8-source interrupt controller, eight parallel I/O lines, and four 8-bit timers.

Fiber Distributed Data Interface

Fiber Distributed Data Interface (FDDI) is defined as a dual fiber-optic token ring LAN (Local Area Network) that can support rates up to 100 Mbps. It can accommodate rings with 1,000 stations. Two Kilometers between stations, and up to 200 kilometers in total length. This technology is driven by the need to support high performance distributed computer systems which are becoming faster and more powerful, thus imposing a greater need for network speed and bandwidth. Other uses for FDDI include backbone networks connecting Ethernet, Token Bus, and Token Ring segments and back end networks connecting high-speed peripherals. FDDI is an American National Standards Institute (ANSI) standard. Motorola's FDDI chip set includes the MC68836, MC68837, MC68838, and MC68839.

MC68836FN
FDDI Clock Generator

The MC68836 FDDI Clock Generator (FCG) implements part of the Physical Layer (PHY) functions of the FDDI standard including clock recovery, data recovery, and NRZI conversions. The FCG also does a five-bit parallel to serial conversion during transmission, and a serial to five-bit parallel conversion during reception. The FCG uses the five-bit parallel interface to communicate with the MC68837 device. The FCG directly connects to fiber optic modules through differential driver/receiver pins. Features include full duplex operations, 125 MHz clock recovery from incoming serial NRZI data stream, and 125 MHz transmit clock generation.

MC68837RC,FC
Elasticity Buffer and Link Manager

The Elasticity Buffer and Link Manager (ELM) implements the remaining of the PHY functions of the FDDI standard including data framing, elasticity buffer, encoding, decoding, smoothing, line sate detection, and repeat filter. The ELM also implements some Station Management (SMT) functions which are : Connection Management (CMT), Physical Connection Management (PCM), Physical Connection Insertion (PCI), and Link Error Monitor (LEM).

See package suffix definitions on page 2-18.

MC68838RC,FC
Media Access Controller

The Media Access Controller (MAC) implements the MAC portion of the FDDI standard. The MAC protocol is the lower sublayer of the ISO OSI data link layer and provides for fair and deterministic sharing of the physical medium, address recognition, frame check sequence generation and verification, frame insertion, frame repetition, frame removal, token generation, and certain error recovery procedures. Features on the MC68838 include independent receive and transmit data paths and state machines, bridging support including a bit order reversal option, a count and void frame bridge stripping algorithm, and CRC appendage on a per frame basis. The MAC also contains an interface to Content Addressable Memory (CAM) for individual and multicast address recognition.

MC68839RC,FC
FDDI System Interface

The FDDI System Interface (FS!) is a high performance interface device which can easily connect to any bus including high speed processors, little- and big-endian busses, and multiplexed/non-multiplexed address data busses. Its primary purpose is to interface the FDDI protocol devices to the user system bus. FSI features include support for a ring buffer structure, addressing flexibility, programmable partitioned internal RAM for temporary data storage, two 32-bit ports, the ability to sustain (60 µs) bus latencies, support for synchronous and asynchronous frames, and the ability to chain multiple buffers per frame.

Development Tools

M68302ADS
Application Development System

The M68302ADS is a stand-alone board developed by Motorola that includes software modules (driver code, LAPB, LAPD, and X.25), a real-time kernel, and a monitor/debugger. The board consists of the MC68302, memory (512K bytes of RAM expandable to 1M bytes, 256 bytes of EPROM and EEPROM), and an MC68681 DUART (to allow all MC68302 serial ports to be available to the user). It is an inexpensive, ideal platform for software development and testing.

M68FADS
FDDI Chip Set

This development tool includes the FDDI ADS board and SMT source code on an Apple or MS-DOS 3.5″ diskette or DC600A cartridge tape.

M68340EVS
Evaluation System

The M68340EVS consists of a platform board (PFB), a business card computer (BCC), and a BCC development interface (BCCDI).

Support Software

M68KESW-PC1

This Intermetrics software package is for the 68K Family (68000, 68008, 68HC001, 68010, 68020, 68030, 68EC030, 68040, 683xx). The M68KESW InterTools package includes C compiler, assembler/linker, runtime libraries, and one year of support from Intermetrics.

M68040FPSP

This software provides 68040 floating point emulation of unimplemented 68881/68882 functions.

Package Definitions:

L	— Ceramic DIP	RP	— Plastic Pin Grid Array
LC	— Ceramic DIP, Gold Lead Finish	FN	— Plastic Quad Pack (PLCC)
P	— Plastic DIP	FG	— Plastic Quad Flat Pack (PQFP)
RC	— Pin Grid Array, Gold Lead Finish	FE	— Ceramic Quad (Gull Wing)
RL	— Pin Grid Array, Solder Lead Finish	FC	— Plastic Quad (Gull Wing)
R	— Pin Grid Array, Solder Lead Finish		

InterTools is a trademark of Intermetrics, Inc.

The M88000 RISC Family

In Brief . . .

The life of a successful microprocessor architecture can be expected to span decades. The 88000 RISC architecture was designed as an extensible architecture allowing generations of future product family members well into the next century. The flexible design of the 88000 allows for the addition of special function units in the future. These special function units will accelerate floating point operations, graphics, and other sophisticated applications.

	Page
Architecture, Performance, and Software Compatibility	2.3-2
Microprocessor	2.3-2
Cache/Memory Management Units	2.3-3

Motorola's 88000 RISC Microprocessors

. . . an architecture you can build on

The 88000 RISC was designed from the start for superscaler implementations. In fact, the design of the second generation 88110 microprocessor is a unique superscaler implementation called Symmetric Superscaler.™ The Symmetric Superscaler design allows you to execute multiple instructions in a single clock cycle without any restrictions on instruction ordering. So there are no wait states or performance penalties because of out of order instructions.

Also, while other RISC microprocessors may be limited in the number of instructions they can execute in a single clock cycle, future members of the 88000 will be able to deliver 6, 8, 10 or even more instructions per clock cycle, thus providing the performance edge required for next generation system designs.

Performance Plus Software Compatibility

Although high performance is recognized as a key feature for systems design, it is even more important to maintain software compatibility. Motorola's 88000 Family comes from the only company committed to long term upward software compatibility through such features as register scoreboarding and protected pipelines. Our goal is to make sure each successive generation of the 88000 RISC family delivers a significantly higher performance level while maintaining software compatibility. This gives the opportunity for designing one of the industry's highest performance systems, while leveraging your largest dollar investment in new systems, your software.

Software compatibility is also promoted through standards to provide an open systems environment benefitting system companies, software developers, and end users because 88000 based systems from different vendors will run all of the same software.

Microprocessors

MC88100RC
32-Bit RISC Microprocessor

The MC88100 is the first processor in the 88000 Family of RISC (reduced instruction set computer) microprocessors. Implemented with Motorola's HCMOS technology, the MC88100 incorporates 32-bit registers, data paths, and addresses. In designing the MC88100, Motorola has incorporated a high degree of fine-grain parallelism; four, independent execution units maintain separate, fully concurrent execution pipelines. Most instructions operate in one machine cycle or effective concurrent execution can be accomplished through internal pipelines in one machine cycle. A common register file provides data sharing and synchronization control among the execution units through register scoreboarding.

The MC88100 addresses a variety of applications requiring high operational speeds and efficient, fast-execution architectures. All data manipulation instructions are nondestructive register to register or register with immediate operations, allowing both fast operand access and operand reuse. IEEE 754 floating-point arithmetic is supported in the processor. Instruction and data memory space are accessed through separate memory ports, allowing simultaneous access to dedicated memory areas. The 88000 Family includes the MC88200 CMMU (cache/memory management unit), which adds high-speed memory caching, two-level, demand-paged memory management, and support for shared-memory multiprocessing. The 88000 Family also includes a full line of highly optimizing compilers, operating systems, development boards, and development tools.

MC88110 RC
32-Bit RISC Microprocessor

The MC88110 is the second implementation of the 88000 family of reduced instruction set computer (RISC) microprocessors. The MC88110 is a Symmetric Superscaler™ machine capable of issuing and retiring two instructions per clock without any special alignment, ordering, or type restrictions on the instruction stream. Instructions are issued to multiple execution units, execute in parallel, and can complete out of order, with the machine automatically keeping results in the correct program sequence. The Symmetric Superscaler™ design allows sustained performance to approach the peak performance capability.

The MC88110 uses dual instruction issue and simple instructions with extremely rapid execution times to yield maximum efficiency and throughput for 88000 systems. Instructions either execute in one clock cycle, or effective one clock cycle execution is achieved through internal pipelining. Ten independent execution units communicate with a general register file and an extended register file through multiple 80-bit internal buses. Each of the register files has sufficient bandwidth to supply four operands and receive two results per clock cycle. Each of the pipelined execution units, including those that execute floating-point and data movement instructions, can accept a new instruction and retire a previous instruction on every clock cycle.

In a single chip implementation, the MC88110 integrates the central processing unit, floating point unit, graphics processing unit, virtual memory address translation, instruction cache, and data cache. The MC88110 maintains compatibility with MC88110 user application software.

Cache/Memory Management Units

MC88200RC
16-Kilobyte Cache/Memory Management Unit (CMMU)

The MC88200 CMMU is a high-performance, HCMOS VLSI device providing zero-wait-state memory management and data caching. The MMU (memory management unit) efficiently supports a demand-paged virtual memory environment with two logical address ranges (user/supervisor) of 4 gigabytes each. Translated addresses are provided by one of two ATCs (address translation caches), providing address translation in one clock cycle for most memory accesses. The PATC (page address translation cache) is a 56-entry, fully associative cache containing recently used translations for 4-kilobyte memory pages and is maintained by MC88200 hardware. The BATC (block address translation cache) is a 10-entry cache, loaded by software, containing translations for 512-kilobyte memory blocks. The BATC translations are used for operating system software or for other memory-resident instructions and data. In addition, the MMU provides access control for the two logical address spaces. The CMMU data cache is a 16-kilobyte, four-way, set-associative cache for instruction or data storage. The cache incorporates memory-update policies and cache-coherency mechanisms that support multiprocessor applications. The MC88200 CMMU also includes an MC88100-compatible P bus (processor bus) interface and an M bus (memory bus) interface. A processor may use two or more CMMUs for increased data cache and ATC sizes.

MC88204RC
64K-Byte Cache/Memory Management Unit (CMMU)

The MC88204 CMMU is a high-performance, HCMOS VLSI device providing zero-wait-state memory management and data caching. The memory management unit (MMU) efficiently supports a demand-paged virtual memory environment with two logical address ranges (user/supervisor) of 4 Gbytes each. Translated addresses are provided by one of two address translation caches (ATCs), providing address translation in one clock cycle for most memory accesses. The page address translation cache (PATC) is a 56-entry, fully associative cache containing recently used translations for 4K-byte memory pages and is maintained by MC88204 hardware. The block address translation cache (BATC) is a 10-entry cache, loaded by software, containing translations for 512K-byte memory blocks. The BATC translations are used for operating system software or for other memory-resident instructions and data. In addition, the MMU provides access control for the two logical address spaces. The CMMU data cache is a 64K-byte, four-way set-associative cache for instruction or data storage. The cache incorporates memory-update policies and cache-coherency mechanisms that support multiprocessor applications. The MC88204 CMMU also includes an MC88100-compatible processor bus (P-bus) interface and memory bus (M-bus) interface.

The MC88204 CMMU is completely software and pin-level compatible with the MC88200 16K-byte CMMU. The functionality of the MC88204 is identical to that of the MC88200. With board layout constraints in mind, a central processing unit (CPU) may use up to two MC88204 CMMUs on the data P-bus and up to two MC88204 CMMUs on the instruction P-bus to increase data cache and ATC sizes.

MC88410
Secondary Cache Controller

The MC88410 is a highly integrated secondary cache controller for the MC88110 microprocessor which reduces memory latency and extends multiprocessing capability for those seeking the highest level of system performance. Used with the MCM62110 Fast Static RAM, it provides a functionally complete secondary cache solution for both uniprocessor and multiprocessor environments. The MC88410 provides tag, control and buffering for 1/4, 1/2, and 1 Mbyte secondary cache configurations, all in a single chip cache controller. The MC88410 eliminates external logic between the processor and the secondary cache, provides bus arbitration for the MC88110, and requires no external programming.

The MC88410 and MCM62110 are optimized to provide low latency memory access to the MC88110 processor. Initial accesses incur only one wait state and subsequent transactions in a burst incur zero wait states. Data streaming to the processor reduces the penalty on secondary cache misses.

The MC88410 expands the MC88110's system flexibility by providing a choice of secondary cache line size, burst byte ordering, and system clock frequency. The MC88410 extends the MC88110 multiprocessing capability by significantly reducing system bandwidth consumption. This increased available bandwidth, along with the MC88410's hardware enforced cache coherency protocol, enable the implementation of dual bus systems and scalable shared-bus multiprocessing systems.

Single-Chip Microcontrollers (MCUs)

In Brief . . .

Motorola offers the most comprehensive selection of high-performance microcontrollers anywhere—from our industry-standard 8-bit devices to the cutting-edge technology of our new 16- and 32-bit products. Just pick the family of products that meets your needs for price and performance, then select from the incredible variety of on-chip peripherals to fill the precise requirements of your design.

The sophisticated on-chip capabilities of the M68HC11, M68HC16, and M68332 Families in particular have proved ideal for the fast-response, interrupt-intensive demands of embedded control environments.

All our 8-bit families are "related", so you can change families to upgrade a system without having to start over with new architecture or software. The same upward source code compatibility exists within our 16- and 32-bit families. Not only that, but the 16-bit line is fully compatible with the 8-bit families, so you can even jump from 8- to 16-bit technology without starting from scratch.

Page

The M68300 Family 2.4-2

The M68HC16 Family 2.4-2

The M68HC11 Family 2.4-5

The M6801 Family 2.4-8

The M68HC05 Family 2.4-9

The M6804 Family 2.4-11

The M6805 Family 2.4-11

One-Time Programmable/Emulator MCUs . . . 2.4-11

8-Bit MPU/Peripherals 2.4-13

Serial Peripheral Interface 2.4-13

Hardware Development Tools 2.4-14

Software Development Tools 2.4-16

The M68300 Modular Microcontroller Family — 32-Bit, HCMOS

The high-performance M68300 family is designed for embedded control applications. Each M68300 MCU incorporates a 68000-based CPU module, a sophisticated system integration module, and a number of dedicated special-purpose modules. In addition to utilizing a bus protocol similar to that of the M68020, the system integration module generates external bus-control signals for M6800 devices, and provides a variety of programmable chip-select functions. The rapidly growing library of special-purpose modules includes programmable timers, serial communication interfaces, analog-to-digital converters, RAM, ROM, and Flash EEPROM. M68300 devices can be placed in low-power stop mode to minimize power consumption during periods of inactivity. The M68300 family provides great design flexibility, performance, and compatibility with existing hardware and software. (Refer to the MC68332 Block Diagram.)

Motorola Part Number	ROM	RAM	EEPROM	Timer/DMA	Serial	A/D	I/O	Bus Speed, MHz	Package†	EPROM or EEPROM Version	Comments
MC68330	0	0	0	RTI, WDOG	No	No	16	0-16.8	132 FC 132 FE	N/A	Available from MPU Div 32 Address Lines 2 Chip Selects
MC68331	0	0	0	General Purpose Timer: 3 or 4 IC, 4 or 5 OC, Pulse Accumulator, 2 PWM, RTI, WDOG	Queued SPI, SCI	No	43	0-16.8	132 FC 132 FE	N/A	External Bus 12 Chip Selects Synthesized Clock
MC68332	0	2K	0	TPU: 16 Intelligent μ coded channels, RTI, WDOG	Queued SPI, SCI	No	47	0-16.8	132 FC 132 FE	N/A	External Bus 12 Chip Selects Synthesized Clock
MC68340	0	0	0	2 16 bit Timers w/ 8 bit prescaler, RTI, WDOG 2 ch 32 bit DMA	2 ch UART	No	28	0-16.8	144 FE 144 RP	N/A	Available from MPU Div 32 Address Lines 2 Chip Selects

See Definitions on page 2-26.

The M68HC16 Modular Microcontroller Family — 16-Bit, HCMOS

The M68HC16 family is based on the same modular design concept as the M68300 family — many of the same special-purpose modules are available for both families. Each M68HC16 MCU incorporates a true 16-bit CPU module that is upwardly code-compatible with the M68HC11 CPU, a sophisticated system integration module, and a number of special-purpose modules. M68HC16 devices can be placed in low-power stop mode to minimize power consumption during periods of inactivity. The M68HC16 family provides the flexibility and features of the MC68300 family, and also provides a convenient way for users of MC68HC11 devices to move up to 16-bit performance. (Refer to the MCHC16Z1 Block Diagram.)

Motorola Part Number	ROM	RAM	EEPROM	Timer/DMA	Serial	A/D	I/O	Bus Speed, MHz	Package†	EPROM or EEPROM Version	Comments
MC68HC16Z1	0	1K	0	General Purpose Timer: 3 or 4 IC, 4 or 5 OC, Pulse Accumulator, 2 PWM, RTI, WDOG	Queued SPI, SCI	Yes	50	0-16.8	132 FC 132 FE	N/A	External Bus 12 Chip Selects Synthesized CLock

See Definitions on page 2-26.

MC68332 BLOCK DIAGRAM

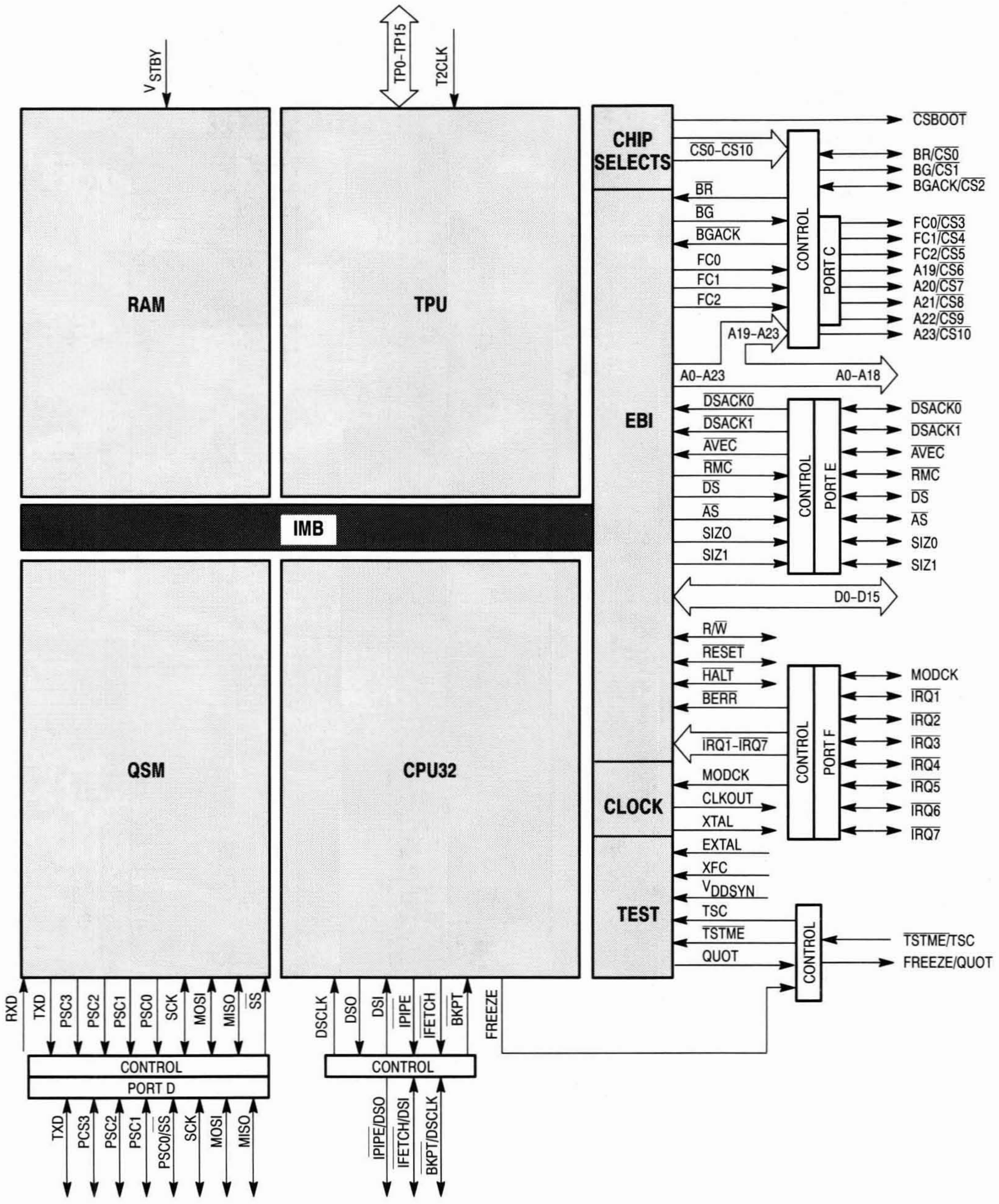

M68HC16Z1 BLOCK DIAGRAM

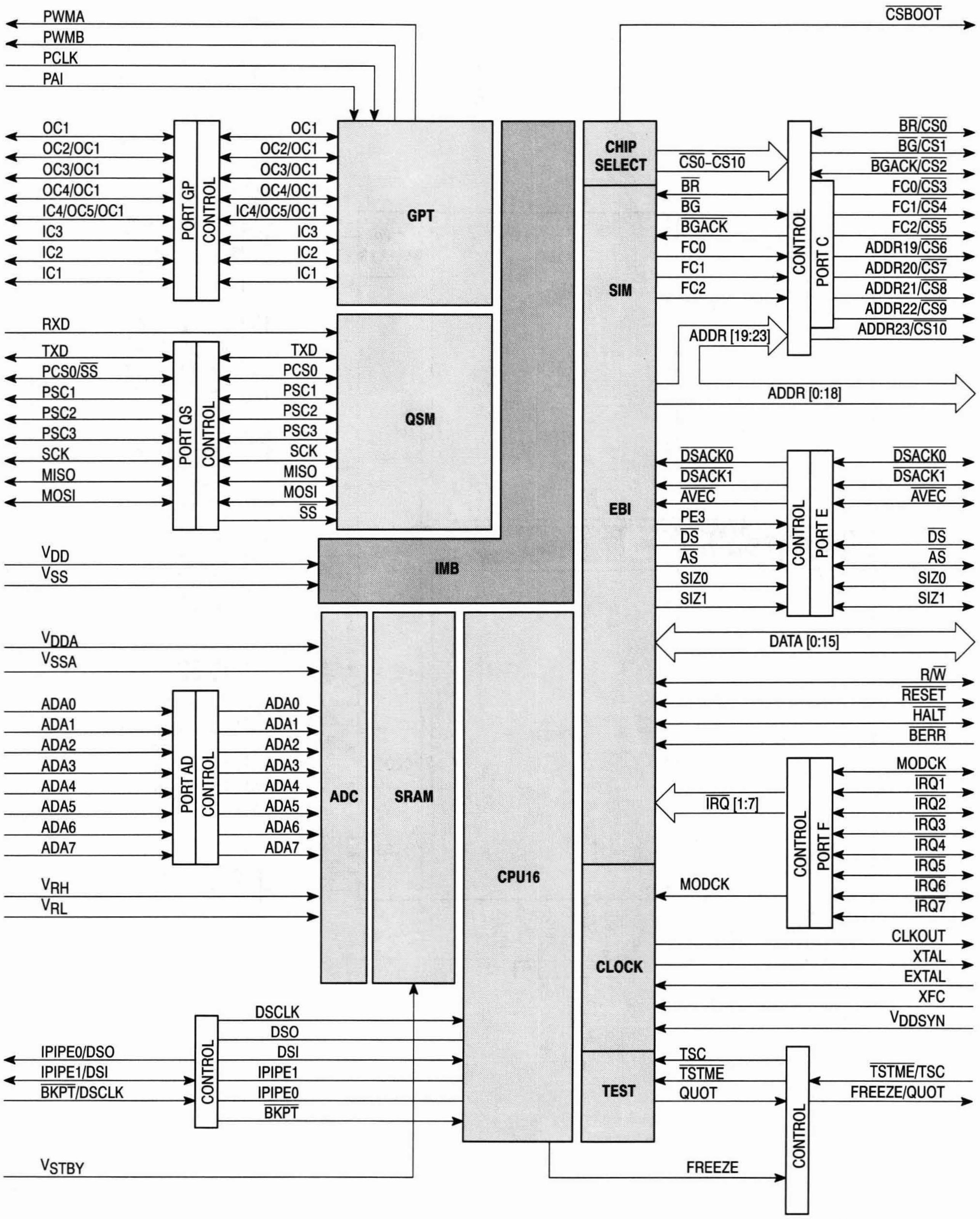

The M68HC11 Family — 8-Bit, HCMOS

M68HC11 microcontrollers incorporate a variety of on-chip capabilities. In addition to multi-use I/O ports, serial interfaces, and programmable timers, certain HC11 devices have highly-accurate A/D converters, programmable chip-select functions, and pulse-width modulators. All members of the M68HC11 family are high-speed, low-power consumption devices.

MC68HC11A8

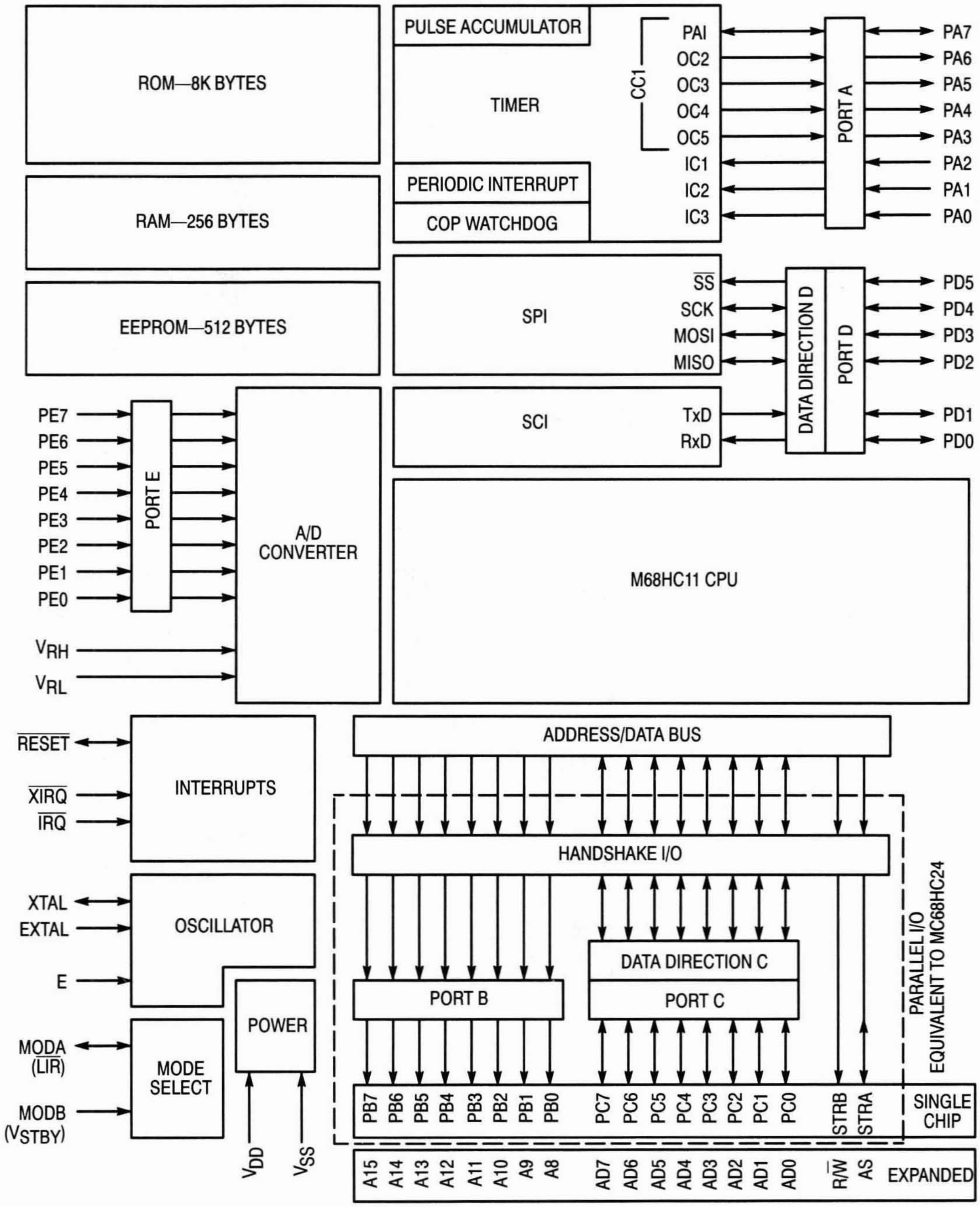

MC68HC11E9

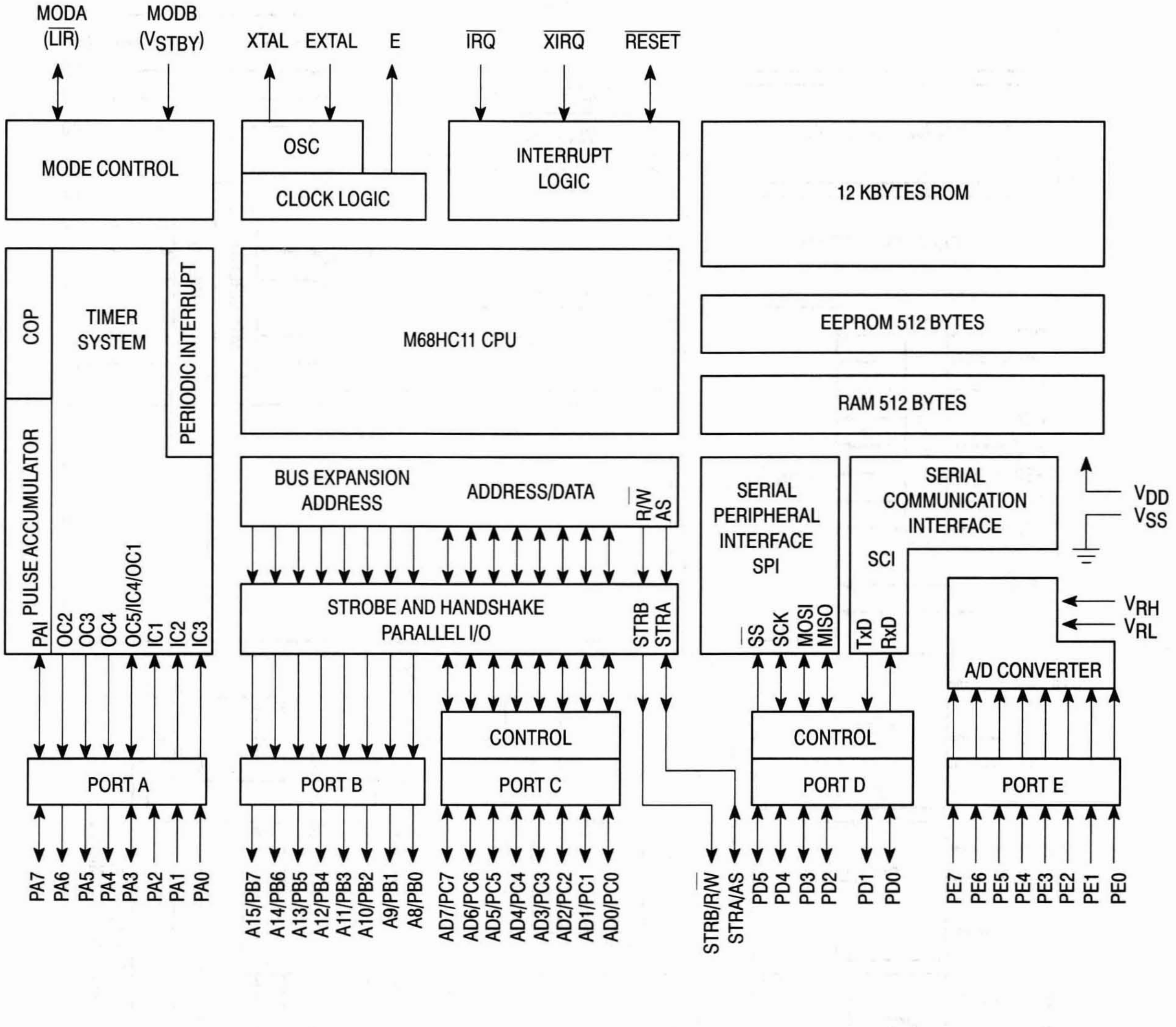
MODA
(LIR)
MODB
(VSTBY)
XTAL
EXTAL
E
IRQ
XIRQ
RESET
MODE CONTROL
OSC
CLOCK LOGIC
INTERRUPT LOGIC
12 KBYTES ROM
COP
TIMER SYSTEM
PERIODIC INTERRUPT
PULSE ACCUMULATOR
M68HC11 CPU
EEPROM 512 BYTES
RAM 512 BYTES
BUS EXPANSION ADDRESS
ADDRESS/DATA
R/W
AS
SERIAL PERIPHERAL INTERFACE SPI
SERIAL COMMUNICATION INTERFACE
SCI
VDD
VSS
STROBE AND HANDSHAKE PARALLEL I/O
STRB
STRA
PAI
OC2
OC3
OC4
OC5/IC4/OC1
IC1
IC2
IC3
SS
SCK
MOSI
MISO
TxD
RxD
VRH
VRL
A/D CONVERTER
CONTROL
CONTROL
PORT A
PORT B
PORT C
PORT D
PORT E
PA7
PA6
PA5
PA4
PA3
PA2
PA1
PA0
A15/PB7
A14/PB6
A13/PB5
A12/PB4
A11/PB3
A10/PB2
A9/PB1
A8/PB0
AD7/PC7
AD6/PC6
AD5/PC5
AD4/PC4
AD3/PC3
AD2/PC2
AD1/PC1
AD0/PC0
STRB/R/W
STRA/AS
PD5
PD4
PD3
PD2
PD1
PD0
PE7
PE6
PE5
PE4
PE3
PE2
PE1
PE0

THE M68HC11 FAMILY (continued)

Microcontrollers

Motorola Part Number	ROM	RAM	EEPROM	Timer/DMA	Serial	A/D	I/O	Bus Speed, MHz	Package†	EPROM or EEPROM Version	Comments
MC68HC11A0	0	256	0	16 bit–3 IC, 5 OC, RTI, WDOG, Pulse Accumulator	SPI, SCI	Yes	22	0-3.0	52 FN 48 P 64 FU	N/A	External Bus Port Replacement HC24
MC68HC11A1	0	256	512	16 bit–3 IC, 5 OC, RTI, WDOG, Pulse Accumulator	SPI, SCI	Yes	38	0-3.0	52 FN 48 P 64 FU	N/A	External Bus Port Replacement HC24
MC68HC11A7	8K	256	0	16 bit–3 IC, 5 OC, RTI, WDOG, Pulse Accumulator	SPI, SCI	Yes	38	0-3.0	52 FN 48 P 64 FU	711E9	
MC68HC11A8	8K	256	512	16 bit–3 IC, 5 OC, RTI, WDOG, Pulse Accumulator	SPI, SCI	Yes	38	0-3.0	52 FN 48 P 64 FU	711E9	
MC68HC11D0	0	192	0	16 bit–3 or 4 IC, 4 or 5 OC, RTI, WDOG, Pulse Accumulator	SPI, SCI	No	14	0-3.0	40 P 44 FN 44 FU	N/A	External Bus Port Replacement HC27
MC68HC11D3	4K	192	0	16 bit–3 or 4 IC, 4 or 5 OC, RTI, WDOG, Pulse Accumulator	SPI, SCI	No	32	0-3.0	40 P 44 FN 44 FU	711D3	
MC68HC11E0	0	512	0	16 bit–3 or 4 IC, 4 or 5 OC, RTI, WDOG, Pulse Accumulator	SPI, SCI	Yes	22	0-3.0	52 FN 64 FU	N/A	External Bus Port Replacement HC24
MC68HC11E1	0	512	512	16 bit–3 or 4 IC, 4 or 5 OC, RTI, WDOG, Pulse Accumulator	SPI, SCI	Yes	38	0-3.0	52 FN 64 FU	N/A	External Bus EEPROM Block Protect Port Replacement HC24
MC68HC11E8	12K	512	0	16 bit–3 or 4 IC, 4 or 5 OC, RTI, WDOG, Pulse Accumulator	SPI, SCI	Yes	38	0-3.0	52 FN 64 FU	711E9	
MC68HC11E9	12K	512	512	16 bit–3 or 4 IC, 4 or 5 OC, RTI, WDOG, Pulse Accumulator	SPI, SCI	Yes	38	0-3.0	52 FN 64 FU	711E9	EEPROM Block Protect
MC68HC811E2	0	256	2K	16 bit–3 or 4 IC, 4 or 5 OC, RTI, WDOG, Pulse Accumulator	SPI, SCI	Yes	38	0-2.0	52 FN	N/A	External Bus EEPROM Block Protect Port Replacement HC24
MC68HC11F1	0	1K	512	16 bit–3 or 4 IC, 4 or 5 OC, RTI, WDOG, Pulse Accumulator	SPI, SCI	Yes	54	0-4.0	68 FN	N/A	External Bus Programmable Chip Selects EEPROM Block Protect Port Replacement HC27
MC68HC11G5	16K	512	0		SPI, SCI	Yes			84 FN	N/A	4 PWM, Event Counter
MC68HC11G7	24K	512	0		SPI, SCI	Yes			84 FN	N/A	4 PWM, Event Counter
MC68HC11K0	0	768	0	16 bit–3 or 4 IC, 4 or 5 OC, RTI, WDOG Pulse Accumulator	SPI, SCI	Yes	37	0-3.0 0-4.0	84 FN	N/A	
MC68HC11K1	0	768	640	16 bit–3 or 4 IC, 4 or 5 OC, RTI, WDOG Pulse Accumulator	SPI, SCI	Yes	62	0-3.0 0-4.0	84 FN	N/A	
MC68HC11K3	24K	768	0	16 bit–3 or 4 IC, 4 or 5 OC, RTI, WDOG Pulse Accumulator	SPI, SCI	Yes	62	0-3.0 0-4.0	84 FN	711K4	
MC68HC11K4	24K	768	640	16 bit–3 or 4 IC, 4 or 5 OC, RTI, WDOG Pulse Accumulator	SPI, SCI	Yes	64	0-2.1	84 FN	711K4	Non-Mux Address/Data Bus
MC68HC11L0	0	512	0	16 bit–3 or 4 IC, 4 or 5 OC, RTI, WDOG, Pulse Accumulator	SPI, SCI	Yes	30	0-3.0	64 FU 68 FN	N/A	External Bus Port Replacement HC24
MC68HC11L1	0	512	512	16 bit–3 or 4 IC, 4 or 5 OC, RTI, WDOG, Pulse Accumulator	SPI, SCI	Yes	46	0-3.0	64 FU 68 FN	N/A	External Bus EEPROM Block Protect Port Replacement HC24
MC68HC11L5	16K	512	0	16 bit–3 or 4 IC, 4 or 5 OC, RTI, WDOG, Pulse Accumulator	SPI, SCI	Yes	46	0-3.0	64 FU 68 FN	711L6	
MC68HC11L6	16K	512	512	16 bit–3 or 4 IC, 4 or 5 OC, RTI, WDOG, Pulse Accumulator	SPI, SCI	Yes	46	0-3.0	64 FU 68 FN	711L6	EEPROM Block Protect

Definitions:

- DTMF —Dual-Tone Multi-Frequency
- IC —Input Capture
- I^2C —Inter-Integrated Circuit
- OC —Output Compare
- PWM —Pulse Width Modulation
- RTC —Real-Time Clock
- RTI —Real-Time Interrupt
- SCI —Serial Communications Interface
- SIOP —Simple Serial I/O Port
- SPI —Serial Peripheral Interface
- WDOG —Watch Dog Timer

† Package Definitions:

- B —Shrink Dual-in-Line Plastic
- DW —Small Outline (Wide-Body SOIC)
- FB —10x10 mm Quad Flat Pack (QFP)
- FC —Fine-Pitch Plastic Quad (PQFP)
- FN —Plastic Quad (PLCC)
- FS —Windowed Cerquad
- FT —28x28 mm Quad Flat Pack (QFP)
- FU —14x14 mm Quad Flat Pack (QFP)
- L —Ceramic
- P —Dual-in-Line Plastic
- S —Cerdip (windowed or non-windowed)

One-Time Programmable and Reprogrammable MCUs

Motorola Part Number	EPROM	RAM	EEPROM	Timer	Serial	A/D	I/O	Bus Speed, MHz	Package†	Comments
MC68HC711D3	4K	192	0	16 Bit–3 or 4 IC, 4 or 5 OC, Pulse Accumulator, RIT, WDOG	SPI, SCI	No	32	0-3.0	40 P 44 FN 40 S 44 FS	Multiplexed Bus
MC68HC711E9	12K	512	512	16 Bit–3 or 4 IC, 4 or 5 OC, Pulse Accumulator, RTI, WDOG	SPI, SCI	Yes	38	0-3.0	52 FS 52 FN	Multiplexed Bus EEPROM Block Protect
MC68HC711K4	24K	768	640	16 Bit–3 or 4 IC, 4 or 5 OC, 4 PWM Pulse Accumulator, RTI, WDOG	SPI, SCI	Yes	62	0-4.0	84 FN 84 FS	Non-Multiplexed Bus EEPROM Block Protect
MC68HC711J6	16K	512	0	16 Bit–3 or 4 IC, 4 or 5 OC, Pulse Accumulator, RTI, WDOG	SPI, SCI	No	54	0-2.0	68 FN 68 FS	Non-Multiplexed Bus
MC68HC711L6	16K	512	512	16 Bit–3 or 4 IC, 4 or 5 OC, Pulse Accumulator, RTI, WDOG	SPI, SCI	Yes	46	0-3.0	64 FU 68 FN 68 FS	Multiplexed Bus EEPROM Block Protect

See Definitions on page 2-26.

The M6801 Family — 8-Bit, HMOS

The powerful, versatile M6801 Family devices can be hardware-programmed into eight different operating modes to function in a variety of applications, and each device can function monolithically or be expanded to address up to 64K bytes of external memory.

Microcontrollers

Motorola Part Number	ROM	RAM	EEPROM	Timer/DMA	Serial	A/D	I/O	Bus Speed, MHz	Package†	EPROM or EEPROM Version	Comments
MC6801	2048	192	0	16 bit: 1 IC, 1 OC	SCI	No	29	0.5-2.0	40 P	68701	
MC6803	0	192	0	16 bit: 1 IC, 1 OC	SCI	No	13	0.5-2.0	40 P	N/A	
MC6801U4	4096	256	0	16 bit: 2 IC, 3 OC	SCI	No	29	0.5-1.25	40 P	68701U4	
MC6803U4	0	256	0	16 bit: 2 IC, 3 OC	SCI	No	13	0.5-1.25	40 P	N/A	

The M68HC05 Family — 8-Bit, HCMOS

The rapidly growing M68HC05 Family is the basis for Motorola's popular CSIC program of affordable customer-specified microcontrollers. It offers more on-chip memory and peripheral options than virtually any other microcontroller line, making it possible for designers to match "ideal" system requirements without having to invest time and money on developing a whole new device.

The following table lists the most popular devices currently available. Over 100 CSICs are available or in development, with more being designed all the time.

MC68HC05C4

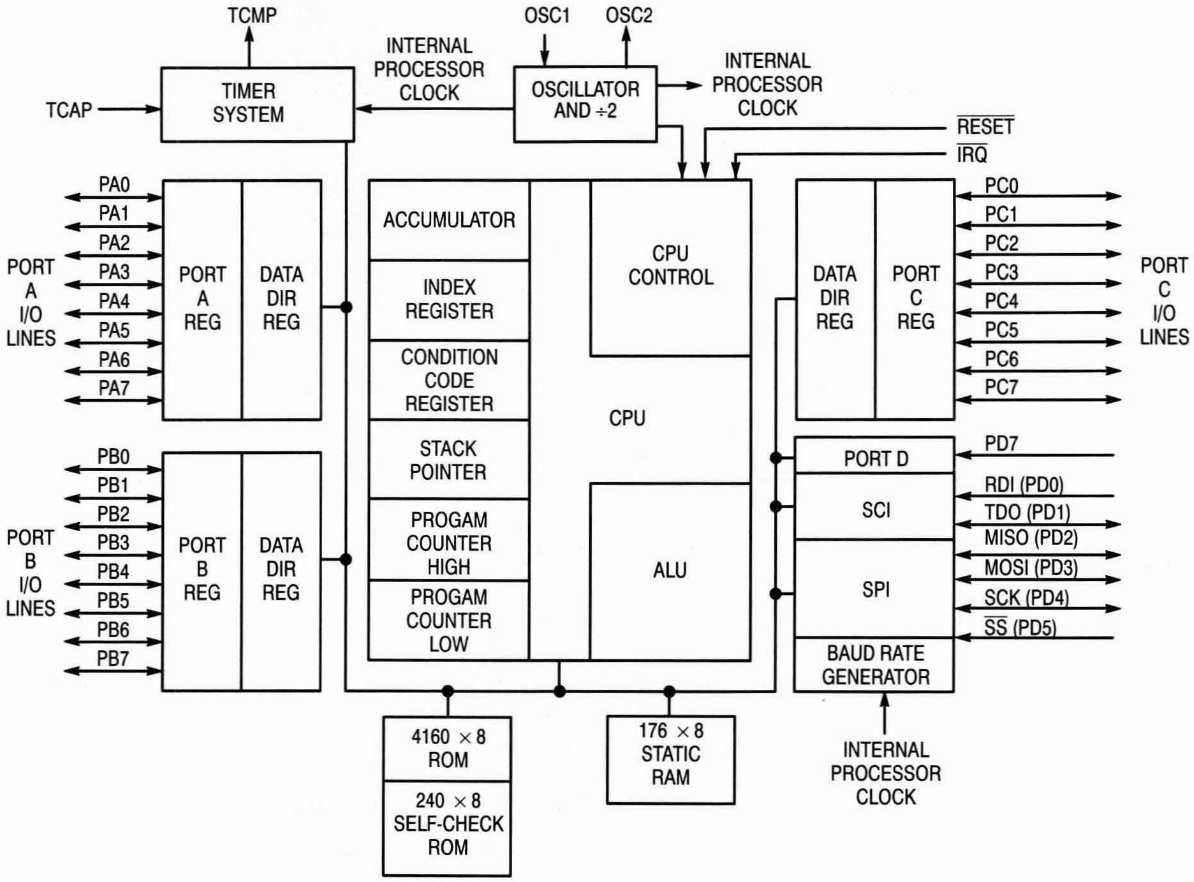

THE M68HC05 FAMILY (continued)
Microcontrollers

Motorola Part Number	ROM	RAM	EEPROM	Timer	Serial	A/D	I/O	Bus Speed, MHz	Package†	EPROM or EEPROM Version	Comments
M68HC05 (HCMOS)											
MC68HC05B4	4K	176	0	16-Bit–2 IC, 2 OC, WDOG	SCI	Yes	32	0-2.1	56-B 52-FN	705B5 805B6	2 PWMs
MC68HC05B6	6K	176	256	16-Bit–2 IC, 2 OC, WDOG	SCI	Yes	32	0-2.1	56-B 52-FN	705B5 805B6	2 PWMs
MC68HC05B8	8K	176	256	16-Bit–2 IC, 2 OC, WDOG	SCI	Yes	32	0-2.1	56-B 52-FN	N/A	2 PWMs
MC68HC05C4	4K	176	0	16-Bit–1 IC, 1 OC	SPI, SCI	No	31	0-2.1	40-P 44-FN 44-FB	705C8 805C4	Low Voltage & High Speed Versions Available
MC68HC05C5	5K	176	128	16-Bit–1 IC, 1 OC, WDOG	SIOP	No	32	0-2.1	40-P 44-FN	705C5	10 mA Sink Port, LVPI
MC68HC05C8	8K	176	0	16-Bit–1 IC, 1 OC	SPI, SCI	No	31	0-4.0	40-P 44-FN 44-FB	705C8	Low Voltage & High Speed Versions Available
MC68HC05C9	16K	352	0	16-Bit–1 IC, 1 OC, WDOG	SPI, SCI	No	31	0-2.1	40-P 44-FB 44-FN	705C9	Expanded Port D
MC68HC05D9	16K	352	0	16-Bit–1 IC, 1 OC	SCI	No	31	0-2.1	40-P 44-FN	705D9	5 PWMs, 25 mA Sink Port
MC68HC05D24	24K	352	0	16-Bit–1 IC, 1 OC, WDOG	SCI	No	31	0-2.1	40-P 44-FN	N/A	5 PWMs, 24 mA Sink Port
MC68HC05E0	0	480	0	2 Periodic Timers, WDOG	SPI or I^2C	No	36	0-4.0	68-FN	N/A	External Address
MC68HC05E1	4K	368	0	15 stage multi-function, RTC, RTI, WDOG	—	No	20	0-4.0	28-P 28-DW	705E1	Internal PLL Clock Synthesizer
XC68HC05F6	4K	320	0	16-Bit–1 IC, 1 OC	SPI	No	28	0-2.1	42-B	N/A	DTMF
XC68HC05G8	8K	172	0	15 stage multi-functional, RTC, WDOG	Dual SCI	Yes	40	0-2.1	160-FT	N/A	Power Management, PLL, Keyboard Control
MC68HC05J1	1K	64	0	15 stage multi-function, RTI, WDOG	—	No	14	0-2.1	20-P 20-DW	705J2	Low Cost
XC68HC05L5	8K	256	0	16-Bit–1 IC, 1 OC 8-Bit–1 IC, 1 OC	SIOP	No	39	0-2.1	80-FU	N/A	156-Segment LCD, External Address
XC68HC05L6	6K	176	0	16-Bit–1 IC, 1 OC	SPI	No	24	0-2.1	68-FN	N/A	96-Segment LCD
MC68HC05L7	6K	176	0	16-Bit–1 IC, 1 OC, RTC	SCI	No	27	0-2.1	128-FT Die	N/A	960 Segment LCD, External Address
MC68HC05L9	6K	176	0	16-Bit–1 IC, 1 OC, RTC	SCI	No	27	0-2.1	128-FT Die	N/A	640 Segment LCD, External Address
MC68HC05L10	13K	352	0	16-Bit–1 IC, 1 OC	SPI, SCI	No	28	0-3.6	128-FT Die	N/A	LCD Driver, MMU, External Address
XC68HC05M4	4K	128	0	8-Bit; 16-Bit–1 IC, 1 OC, WDOG	—	Yes	32	0-2.1	52-FN	N/A	24 Lines (3 Ports) VFD on Chip
MC68HC05P1	2K	128	0	16-Bit–1 IC, 1 OC	—	No	21	0-2.1	28-P 28-DW	705P9	
XC68HC05P3	3K	96	128	16-Bit–1 IC, 1 OC WDOG	—	No	22	0-2.1	28-P 28-DW	N/A	Keyboard Interrupt
MC68HC05P4	4K	176	—	16-Bit–1 IC, 1 OC, WDOG	SIOP	—	21	0-2.1	28-P 28-DW	705P6	
MC68HC05P7	2K	128	0	16-Bit–1 IC, 1 OC, WDOG	SIOP	No	21	0-2.1	28-P 28-DW	705P9	
XC68HC05P8	2K	112	32	15 stage multi-function, RTI, WDOG	—	Yes	20	0-2.1	28-P 28-DW	505P8	LVPI Option on EEPROM
XC68HC05P9	2K	128	—	16-Bit–1 IC, 1 OC, WDOG	SIOP	Yes	21	0-2.1	28-P 28-DW	705P9	Low cost
MC68HC05SC11	6K	128	0	—	—	No	5	0-2.1	Die	N/A	8K EPROM, Security
MC68HC05SC21	6K	128	3K	—	—	No	5	0-2.1	Die	N/A	Security
MC68HC05SC24	3K	128	1K	—	—	No	5	0-2.1	Die	N/A	Security
MC68HC05T1	8K	320	—	16-Bit–1 IC, 1 OC, WDOG	SIOP	Yes	30	0-2.1	40-P	705T3	On-Screen Display, 9 PWMs
XC68HC05T2	15K	320	0	16-Bit–1 IC, 1 OC, WDOG	SIOP	Yes	30	0-2.1	40-P	705T3	On-Screen Display, 9 PWMs
XC68HC05T4	5K	96	0	16-Bit–1 IC, 1 OC, WDOG	—	Yes	16	0-2.1	42-B	705T4	On-Screen Display, 6 PWMs
XC68HC05T7	8K	320	0	16-Bit–1 IC, 1 OC, RTC	I^2C	Yes	28	0-2.1	56-B	705T7	On-Screen Display, 9 PWMs

MICROCONTROLLERS (continued)

Motorola Part Number	ROM	RAM	EEPROM	Timer	Serial	A/D	I/O	Bus Speed, MHz	Package†	EPROM or EEPROM Version	Comments
M6804 (HMOS)											
MC6804J1	504	32	0	8-Bit	—	No	12	83-229 kHz	20-P	N/A	
MC6804J2	1000	32	0	8-Bit	—	No	12	83-229 kHz	20-P	N/A	
MC6804P2	1024	32	0	8-Bit	—	No	20	83-229 kHz	28-P	704P2	
M6805 (HMOS)											
MC6805P2	1K	64	0	8-Bit	—	No	20	0.1-1.0	28-P 28-FN	705P3	LVI Option
MC6805P6	2K	64	0	8-Bit	—	No	20	0.1-1.0	28-P	705P3	LVI Option
MC6805R2	2K	64	0	8-Bit	—	Yes	32	0.1-1.0	40-P 44-FN	705R3	LVI Option, Prog. Prescaler Option
MC6805R3	4K	112	0	8-Bit	—	Yes	32	0.1-1.0	40-P 44-FN	705R3	7-Bit Prescaler, LVI Option
MC6805R6	4K	112	0	8-Bit	—	Yes	32	0.1-1.0	40-P 44-FN	705R3	
MC6805S2	1K	64	0	16-Bit; 8-Bit	SPI	Yes	16	0.1-1.0	28-P	705S3	15-Bit Prescaler, LVI
MC6805S3	4K	104	0	2 8-Bit; 16-Bit	SPI	Yes	21	0.1-1.0	28-P	705S3	1 Extra 8-Bit Timer
MC6805U2	2K	64	0	8-Bit	—	No	32	0.1-1.0	40-P 44-FN	705U3	LVI Option
MC6805U3	4K	112	0	8-Bit	—	No	32	0.1-1.0	40-P 44-FN	705U3	7-Bit Prescaler LVI Option

One-Time Programmable/Emulator MCUs

Motorola Part Number	EPROM	RAM	EEPROM	Timer	Serial	A/D	I/O	Bus Speed, MHz	Package†	Comments
XC68HC705B5	6K	176	0	16-Bit–2 IC, 2 OC, WDOG	SCI	Yes	32	0-2.1	56-B 52-FN	2 PWMs
XC68HC705C5	5K	176	128	16-Bit–1 IC, 1 OC, WDOG	SIOP	No	32	0-2.1	40-P 40-S 44-FN	10 mA Sink Port, LVPI
MC68HC705C8	8K	304	0	16-Bit–1 IC, 1 OC, WDOG	SPI, SCI	No	31	0-4.0	40-P 44-FN 40-S 44-FB	Low Voltage & High Speed Versions Available
XC68HC705C9	16K	352	0	16-Bit–1 IC, 1 OC, WDOG	SPI, SCI	No	31	0-2.1	40-P 40-S 44-FN	
XC68HC705D9	16K	352	0	16-Bit–1 IC, 1 OC, WDOG	SCI	No	31	0-2.1	40-P 40-S 44-FN	5 PWMs, LED
XC68HC705E1	4K	368	0	15 stage multi-function, RTC, RTI, WDOG	—	No	20	0-4.0	28-S 28-P 28-DW	PLL
XC68HC705F6	4K	320	0	16-Bit–1 IC, 1 OC	SPI	No	26	0-2.1	42-B	
XC68HC705H2	2K	128	0	15 stage multi-function, RTC, WDOG	SIOP	No	16	0-2.1	40-P 44-FN	Dual LDMOS, PWMs, H-Bridge Drivers
MC68HC705J2	2K	112	0	15 stage multi-function, RTI, WDOG	—	No	14	0-2.1	20-P 20-DW 20-S	
MC68HC705L5	8K	256	0	16-Bit–1 IC, 1 OC 8-Bit–1 IC, 1 OC	SIOP, SPI	No	39	0-2.1	80-FU	160-Segment LCD
XC68HC705P9	2K	128	0	16-Bit–1 IC, 1 OC, WDOG	SIOP	Yes	21	0-2.1	28-P, 28-DW, 28-S	
XC68HC705T10	12K	320	0	16-Bit–1 IC, 1 OC, RTC	I²C	Yes	28	0-2.1	56-B	

ONE-TIME PROGRAMMABLE/EMULATOR MCUs (continued)

Motorola Part Number	EPROM	RAM	EEPROM	Timer	Serial	A/D	I/O	Bus Speed, MHz	Package†	Comments
MC68705R3	4K	112	0	8-Bit	—	Yes	32	0-2.1	40-P 44-FN 40-S	7-Bit Prescaler, LVI Option
MC68HC805B6	0	176	6K+256	16-Bit–2 IC, 2 OC, WDOG	SCI	Yes	32	0-2.1	52-FN	PWMs
XC68HC805C4	0	176	4K	16-Bit–1 IC, 1 OC	SPI, SCI	No	31	0-2.1	40-P 44-FN	Low Voltage & High Speed Versions Available. Not for production. For emulation only.

Microcontroller Electronic Bulletin Board
FREEWARE — (512) 891-FREE
(512) 891-3733

Definitions:

- DTMF —Dual-Tone Multi-Frequency
- IC —Input Capture
- I^2C —Inter-Integrated Circuit
- LVI —Low-Voltage Interrupt
- LVPI —Low Voltage Program Inhibit
- OC —Output Compare
- OSD —On-Screen Display
- PLL —Phase-Lock Loop
- PWM —Pulse Width Modulation
- RTC —Real-Time Clock
- RTI —Real-Time Interrupt
- SCI —Serial Communications Interface
- SIOP —Simple Serial I/O Port
- SPI —Serial Peripheral Interface
- VFD —Vacuum Fluorescent Display
- WDOG—Watch Dog Timer

†Package Definitions:

- B —Shrink Dual-in-Line Plastic
- DW —Small Outline (Wide-Body SOIC)
- FB —10x10 mm Quad Flat Pack (QFP)
- FN —Plastic Quad (PLCC)
- FS —Cerquad
- FT —28x28 mm Quad Flat Pack (QFP)
- FU —14x14 mm Quad Flat Pack (QFP)
- P —Dual-in-Line Plastic
- S —Cerdip (windowed or non-windowed)

8-Bit MPU/Peripherals

Device	Pins	Package†	Part Description
MC146818	24	P	Real Time Clock, 50 Bytes RAM, Programmable Square Wave
MC146818A	24, 28	P, FN	Enhanced Version of the MC146818
MC146823	40, 44	P, FN	Three 8-Bit Ports, Handshake Control Logic
MC146805E2	40, 44	P, FN	CMOS 8-Bit Microprocessor
XC68HC68L9	80	FU	LCD Expansion to the HC05L9

Serial Peripheral Interface

MPUs and some MCUs can be used in expandable multichip systems using Serial Peripheral Interface. SPI is a simple 2-3 wire interconnect method to allow MPUs, MCUs, and peripherals to communicate with each other, even in multimaster CPU configurations. To satisfy these system requirements, Motorola supplies a broad line of CMOS SPI peripherals.

PLL Frequency Synthesizers — Typical applications include the areas of televisions, CATV, radios, scanners, cordless telephones, and personal computers.

MC145149 — Dual PLL; dual modulus; ÷ R = 14 stages, ÷ A = 7 stages, ÷ N = 10 stages

MC145155 — Single modulus; ÷ R = 14 stages; ÷ N = 14 stages

MC145156 — Dual modulus; ÷ R = 12 stages, ÷ A = 7 stages, ÷ N = 10 stages

MC145157 — Single modulus; ÷ R = 14 stages, ÷ N = 14 stages

MC145158 — Dual modulus; ÷ R = 14 stages, ÷ A = 7 stages, ÷ N = 10 stages

MC145159 — Sample and hold detector, dual modulus; ÷ R = 14 stages, ÷ A = 7 stages, ÷ N = 10 stages

MC145167 — 60 MHz dual PLL for Cordless Phones, 10 channel pairs

MC145169 — 60 MHz dual PLL for Cordless Phones, 15 channel pairs

MC145170 — VHF single-chip device; ÷ R = 15 stages, ÷ N = 16 stages

Data Converters — These parts may be applied to instrumentation, automotive uses, industrial controls and home electronics.

MC145040 — ADC; 8 bits, 11 inputs, SAR, external clock

MC145041 — ADC; 8 bits, 11 inputs, SAR, internal clock

MC145050 — ADC; 10 bits, 11 inputs, SAR, external clock

MC145051 — ADC; 10 bits, 11 inputs, SAR, internal clock

MC145053 — ADC, 10 bits, 5 inputs, SAR, internal clock

MC144110 — DAC; six 6-bit converters

MC144111 — DAC, four 6-bit converters

Display Decoders/Drivers — These products find applications over a wide range of equipments such as automotive dash boards, home computers, appliances, radios and clocks.

MC14489 — 5-digit plus decimals 7-segment LED driver; can drive 25 lamps

MC14499 — 4-digit 7-segment LED driver

MC145000 — 48-segment LCD driver (master); multiplexed-by-four

MC145001 — 44-segment LCD driver (slave); multiplexed-by-four

MC145453 — LCD driver; 33 nonmultiplexed segments (for 4 1/2-digit, 7-segment-plus-decimal display); may be paralleled for more digits.

Hardware Development Tools

. . . for AMCU

Devices	Evaluation Boards	Evaluation Modules*	Evaluation Systems*/Kits	Programmer Boards
MC6801		M68701EVM		
MC6801U4		M68701EVM		
MC68701		M68701EVM		
MC68701U4		M68701EVM		
MC6803		M68701EVM		
MC6803U4		M68701EVM		
MC68HC11A0/A1/A8	M68HC11EVB M68HC11EVB2 M68HC11EVBU	M68HC11EVM		
MC68HC11D0/D3		M68HC11EVM	M68HC11D3EVS	
MC68HC711D3	M68HC711D3EVB	M68HC11EVM	M68HC11D3EVS	M68HC711D3PGMR
MC68HC11E0/E1/E2/E9	M68HC11EVB M68HC11EVB2 M68HC11EVBU	M68HC11EVM		
MC68HC711E9	M68HC11EVBU	M68HC11EVM		M68HC711E9PGMR
MC68HC811A8/E2	M68HC11EVB M68HC11EVBU	M68HC11EVM		
MC68HC11F1			M68HC11F1EVS	
MC68HC11G5/G7 MC68HC711G5		M68HC11G7EVM		
MC68HC711J6			M68HC11J6EVS	
MC68HC11KA4			M68HC11KA4EVS (available 3Q92)	
MC68HC11K0/K1/K4 MC68HC711K4			M68HC11K4EVS	
MC68HC11L0/L1/L6 MC68HC711L6			M68HC11L6EVS	
MC68HC11M2 MC68HC711M2			M68HC11K4EVS	
MC68HC11N4 MC68HC711N4			M68HC11K4EVS	
MC68HC11P2 MC68HC711P2			M68HC11K4EVS	
MC68HC16Y1	M68HC16Y1EVB (available 2Q92)			
MC68HC16Z1	M68HC16Z1EVB			
MC68331			M68331EVS/ M68331EVK	
MC68332			M68332EVS/ M68332EVK	

*EVSs and EVMs include an Integrated Development Environment (IDE) which contains an editor, assembler, hardware debugger and simulator.

COMPACT DEVELOPMENT SYSTEMS FOR AMCU

System	Description	Available
M68CDS8HC11	Compact Development System for the M68HC11 Family	4Q92
M68CDS16	Compact Development System for the M68HC16 Family (Requires an Active Probe)	2Q92
	Active Probe for the M68HC16Z1	2Q92
	Active Probe for the M68HC16Y1	3Q92
M68CDS32	Compact Development System for the M68300 Family (Requires an Active Probe)	3Q92
	Active Probe for the MC68331 and MC68332	3Q92

. . . for CSIC

Devices	Evaluation Modules*	Evaluation Systems*	Programmer Boards
MC68HC05A6	M68HC05EVM		
MC68HC05B4/B6	M68HC05EVM		
MC68HC705B5	M68HC05EVM		M68HC705B5PGMR
MC68HC805B6	M68HC05EVM		
MC68HC05C2/C3/C4/C8/C9	M68HC05EVM		
MC68HC05C5 MC68HC705C5		M68HC05C5EVS	
MC68HC705C8	M68HC05EVM		M68HC05PGMR
MC68HC805C4	M68HC05EVM		
MC68HC705D9	M68HC05EVM		
MC68HC05E1 MC68HC705E1		M68HC05E1EVS	
MC68HC05F6 MC68HC705F6	M68HC05F6EVM		
MC68HC05G8	M68HC05G8EVM		
MC68HC05H2 MC68HC705H2		M68HC05H2EVS	
MC68HC05J1		M68HC05P8EVS	
MC58HC705J2		M68HC05P8EVS	M68HC705J2PGMR
MC68HC05L5 MC68HC705L5		M68HC05L5EVS	
MC68HC05L6	M68HC05EVM		
MC68HC05L7/L9	M68HC05L9EVM		
MC68HC05M4	M68HC05M4EVM		
MC68HC05P1/P4/P7	M68HC05EVM	M68HC05P9EVS	
MC68HC05P9		M68HC05P9EVS	
MC68HC05P8		M68HC05P8EVS	
MC68HC705P9		M68HC05P9EVS	M68HC705P9PGMR
MC68HC05T1/T2		M68HC05T2EVS	
MC68HC05T4	M68HC05T4EVM		
MC68HC05T7 MC68HC705T10	M68HC05T7EVM		
MC6805P2/P6 MC6805R2/R3 MC6805U2/U3 MC68705P3/P5 MC68705R3/R5 MC68705U3/U5	M68705EVM		

*EVSs and EVMs include an Integrated Development Environment (IDE) which contains an editor, assembler, hardware debugger and simulator.

COMPACT DEVELOPMENT SYSTEMS

System	Description	Available
M68CDS8HC05	Compact Development System for the M68HC05 Family	Now

Software Development Tools

Description	Part Number
M6800 Family Portable Cross Assembler/Linker V1.0	M68HXBRASM
M68HC11 Family Cross C Compiler V1.0	M68HXBCC11
M68300 Family C Compiler/Assembler V1.1	M68HXBCC300
M68000 Family Structured Assembler/Linker and Tools V1.0	M68HXBASM2
M68HC16 Macro Assembler/Linker V4.0	M68HXBASM16
M68HC16 C Compiler V1.0	M68HXBCC16

PC Peripheral Products

In Brief . . .

Motorola broadens its product portfolio with an offering of VLSI support functions designed for use in Personal Computer applications. These controller, timer, interface, and receiver/driver devices enable circuit board designers to increase flexibility in integrating functionality while saving valuable board space and development costs.

These products are the initial offerings from the MOS Digital-Analog IC Division and will lead to other peripheral products in the future.

Page

Floppy Disk Controller 2.5-2

Real Time Clocks 2.5-3

Multifunction I/O Controllers 2.5-4

SCSI Devices 2.5-4

EIA-232 Driver/Receivers 2.5-4

Floppy Disk Controller

Device	Description	Leads	Suffix/Case
MCS3201	PC-XT/AT compatible. Drives 360K, 720K, 1.2M, and 1.44M drives, or any combination of these four formats or tape backup drives. Transfer rates of 250, 300, and 500 kb/s. On-chip address decoder and clock generation.	68	FN/779

PC-XT/AT are trademarks of International Business Machines Corp.

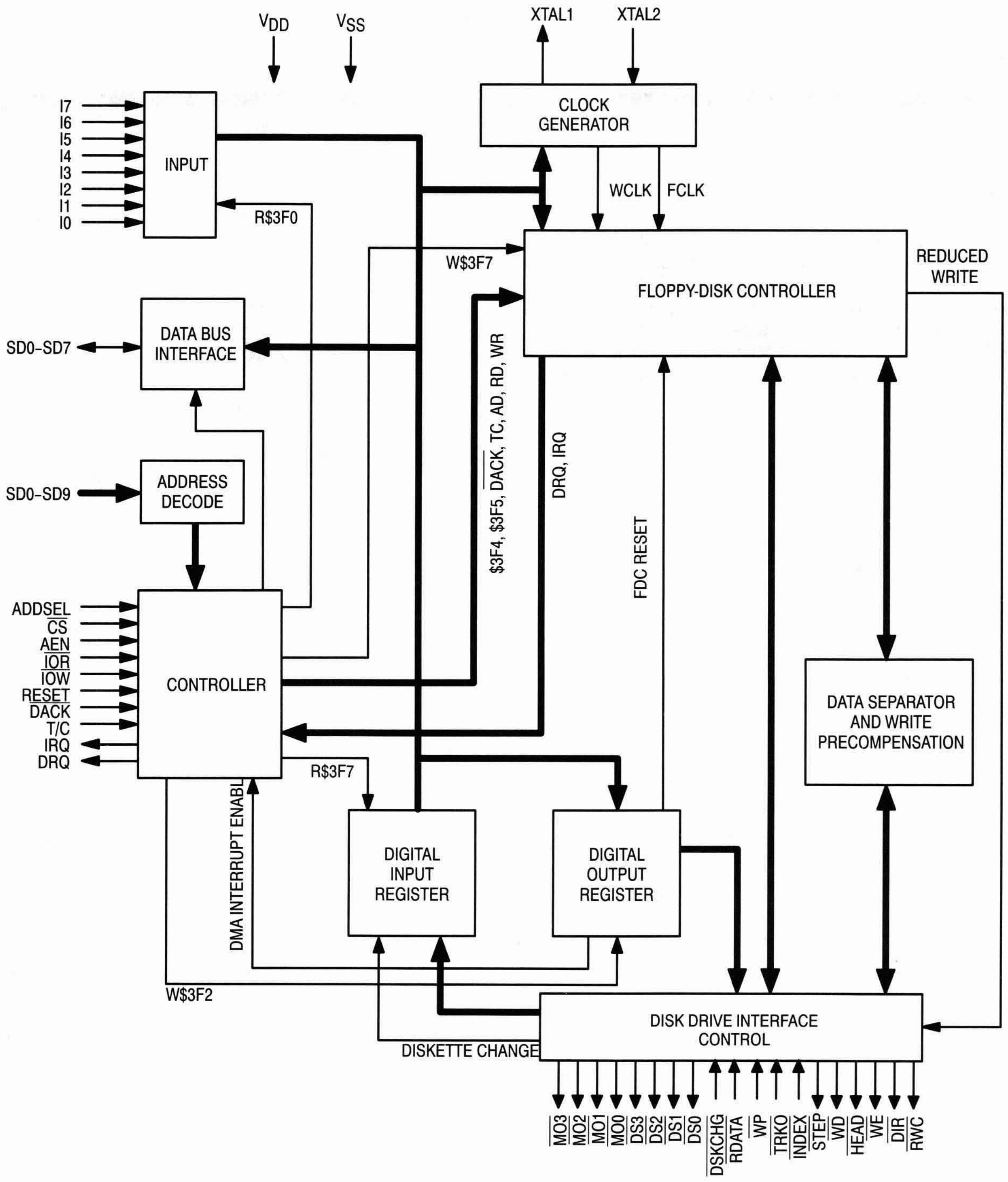

Real-Time Clocks

Device	Description	Leads	Suffix/Case
Parallel			
MCCS146818B	114 bytes of user SRAM. Low-power oscillator. Drop into the Dallas 1285.	24 28	P/709 FN/776
MCCS146818BM	114 bytes of user SRAM with crystal and battery included in the module. Low-power oscillator. Drop into the Dallas 1287.	24	Module
MCCS146818B1M	114 bytes of user SRAM with crystal and battery included in the module. Low-power oscillator. Drop into the Dallas 1287A.	24	Module
MC146818A	50 bytes of DRAM	24	P/709
MCCS156818B	114 bytes of user SRAM. Lower-power version of the MCCS146818B and drop-in replacement.	24	P/709, DW/751E
MCCS156818BM	114 bytes of user SRAM with crystal and battery included in the module. Lower-power version of the MCCS146818BM, and drop-in replacement.	24	Module
MCCS156818B1M	114 bytes of user SRAM with crystal and battery included in the module. Lower-power version of the MCCS146818B1M, and drop-in replacement.	24	Module
Serial			
MCCS1850	64 bytes of SRAM. Power switch enable circuit. Suited for workstation environments.	16	P/620 DW/
MC68HC68T1	32 × 8 SRAM. Watch dog circuitry.	16	P/648 DW/751G

MCCS is a trademark of Motorola Inc.

MCCS146818B

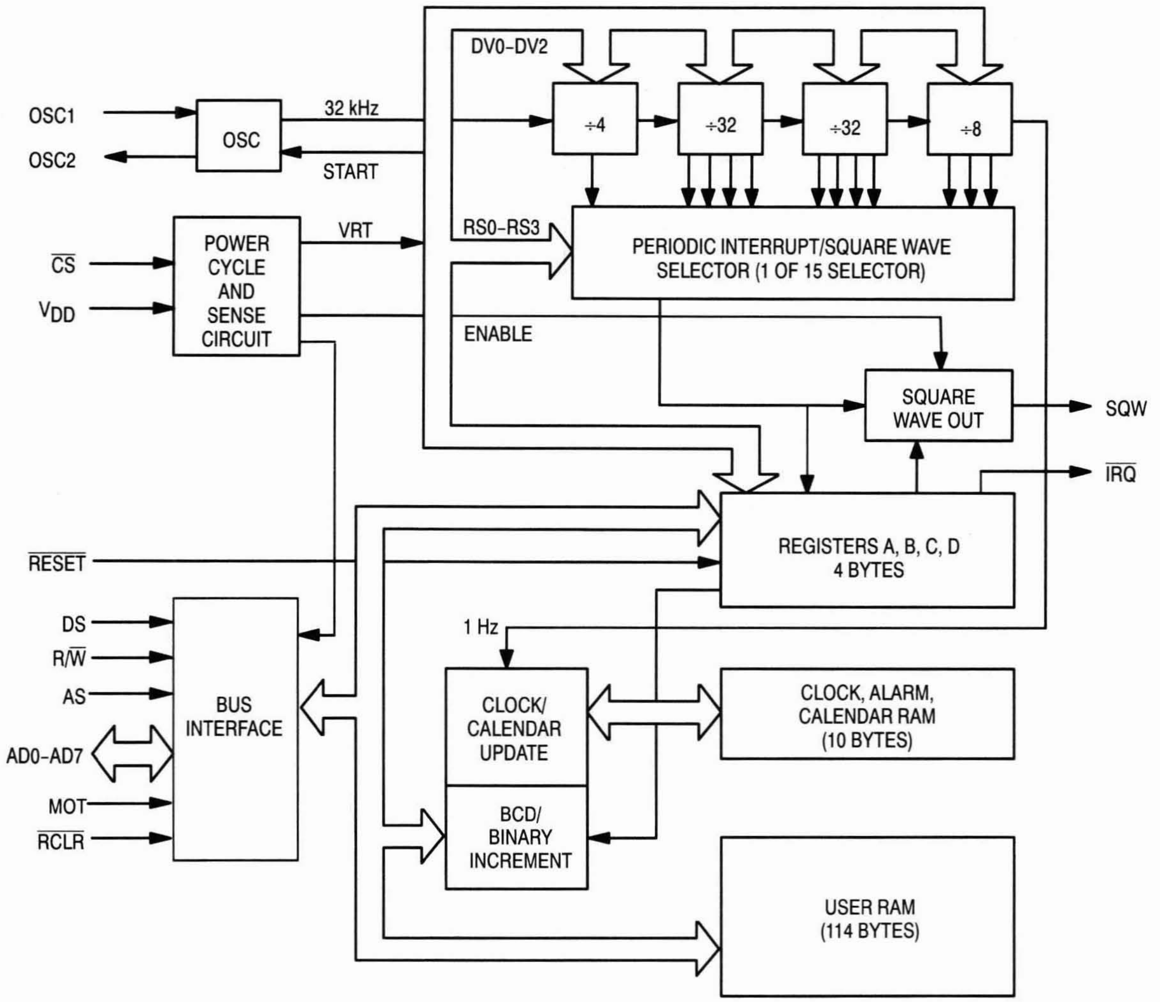

Multifunction I/O Controllers

Device	Description	Leads	Suffix/Case
MCCS16C451	Single serial/single parallel UART. Industry-standard pinout. TTL clock.	68	FN/779
MCCS16C452	Dual serial/single parallel UART. Industry-standard pinout. TTL clock.	68	FN/779
MCCS16C462	Dual serial/single parallel UART. Crystal clock.	68	FN/779

SCSI Devices

Device	Description	Leads	Suffix/Case
MCCS53C90	8-bit SCSI and SCSI-2 compatible controller. Has both initiator and target modes. 16-byte FIFO buffers data. Transfer rates up to 10M bytes/s.	68 80	FN/779 FU/TBD
MCCS142233	SCSI terminator.	20	FN/752

EIA-232 Driver/Receivers

Device	Organization	Supply Voltage	Description	Leads	Suffix/Case
MC145406	3 drivers, 3 receivers	Drivers: ± 5 to ± 12 V Receivers: ± 25 V at V_{DD} = 12 V, V_{SS} = – 12 V	EIA-232-D/V.28	16	P/648 DW/751G
MC145407	3 drivers, 3 receivers and charge pumps	5 V	Ideal for low-power operations. Drivers and receivers functionally equivalent to MC145406.	20	P/738 DW/751D
MC145705	2 drivers, 3 receivers	5 V	Integrated standby mode ideal for power management in notebook, laptop, and palmtop environments.	20	P/738 DW/751D
MC145706	3 drivers, 2 receivers	5 V		20	P/738 DW/751D
MC145707	3 drivers, 3 receivers	5 V		24	P/724 DW/751E

LON® Products

In Brief . . .

Motorola's NEURON® CHIP distributed communication and control processors are sophisticated VLSI devices that make it possible to implement low-cost Local Operating Network applications. The unique combination of hardware and firmware provides all the key functions necessary to process inputs from sensors and control devices intelligently, and propagate control information across a variety of network media.

Used in conjunction with the LONBUILDER™ developer's workbench, the NEURON CHIPS make available to a system designer an object-oriented, high-level environment providing for the easy implementation of distributed sense and control networks, flexible reconfiguration capability after network installation, and management of LONTALK™ protocol messages on the network.

Applications include distributed sense and control systems, instrumentation, machine automation, processor control, diagnostic equipment, environmental monitoring and control, power distribution and control, production control, lighting control, building automation and control, security systems, data collection/acquisition, robotics, home automation, consumer electronics, and automotive electronics.

Page

NEURON CHIPS 2.6-2

LONBUILDER Workbench 2.6-3

Echelon, LON, and NEURON are registered trademarks of Echelon Corporation.
LONBUILDER, LONTALK, and LONWORKS are trademarks of Echelon Corporation.

Neuron Chips

The MC143150 is designed for sense and control systems that require large application programs. An external memory interface allows the system designer to use 42K of the available 64K of address space for application program storage. The MC143150 has no ROM on the chip. The communications protocol, operating system, and 24 I/O function object code is supplied with the LonBuilder starter kit (MC143160EVK). The protocol and application code can be located in external ROM, EEPROM, NVRAM, or battery-backup static RAM.

MC143150FU

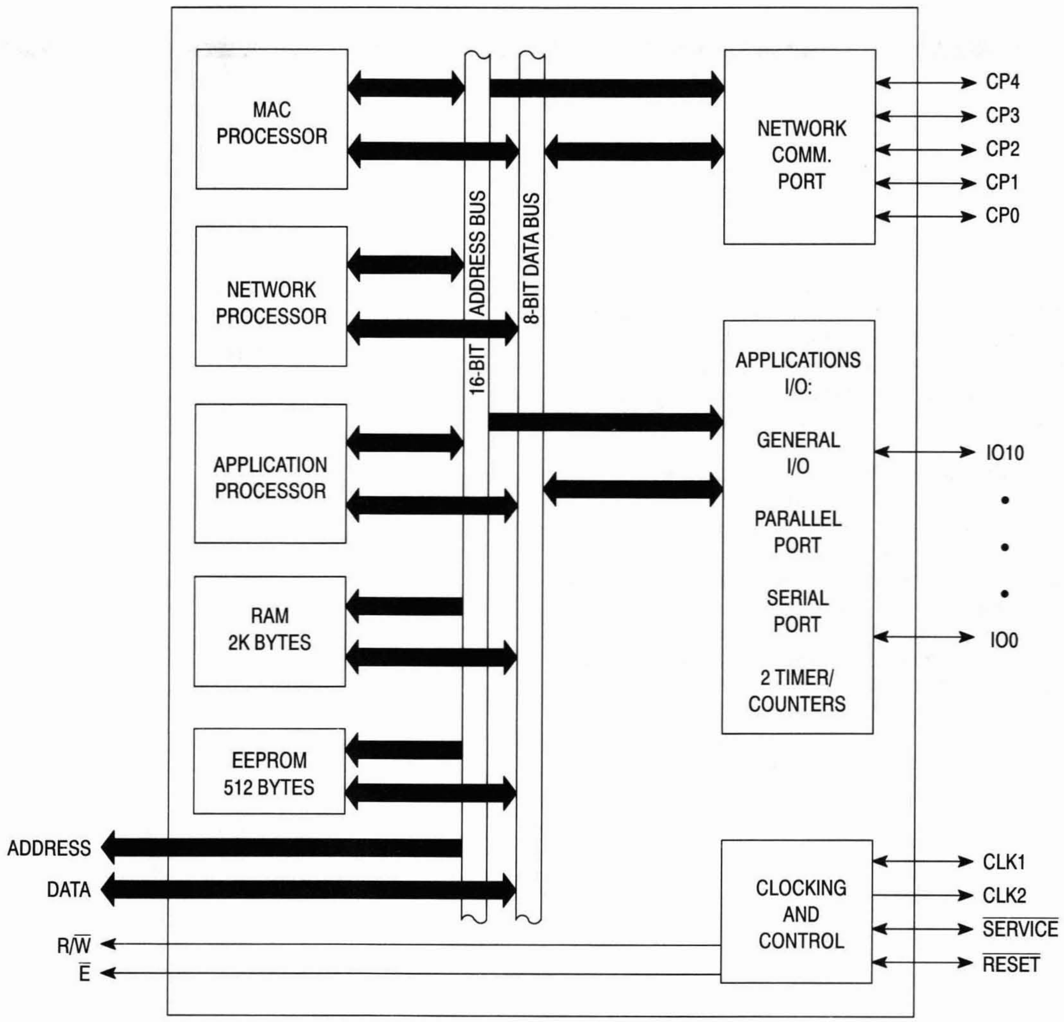

NEURON CHIPS (continued)

The MC143120 has no external memory interface, and is designed for applications that require smaller application programs. It contains 10K of mask ROM that implements the communications protocol, operating system, and the 24 I/O functions that can be accessed by the application program. The application program resides in the internal 512 bytes of EEPROM, and utilizes the firmware in the mask ROM for the specific applications.

MC143120DW

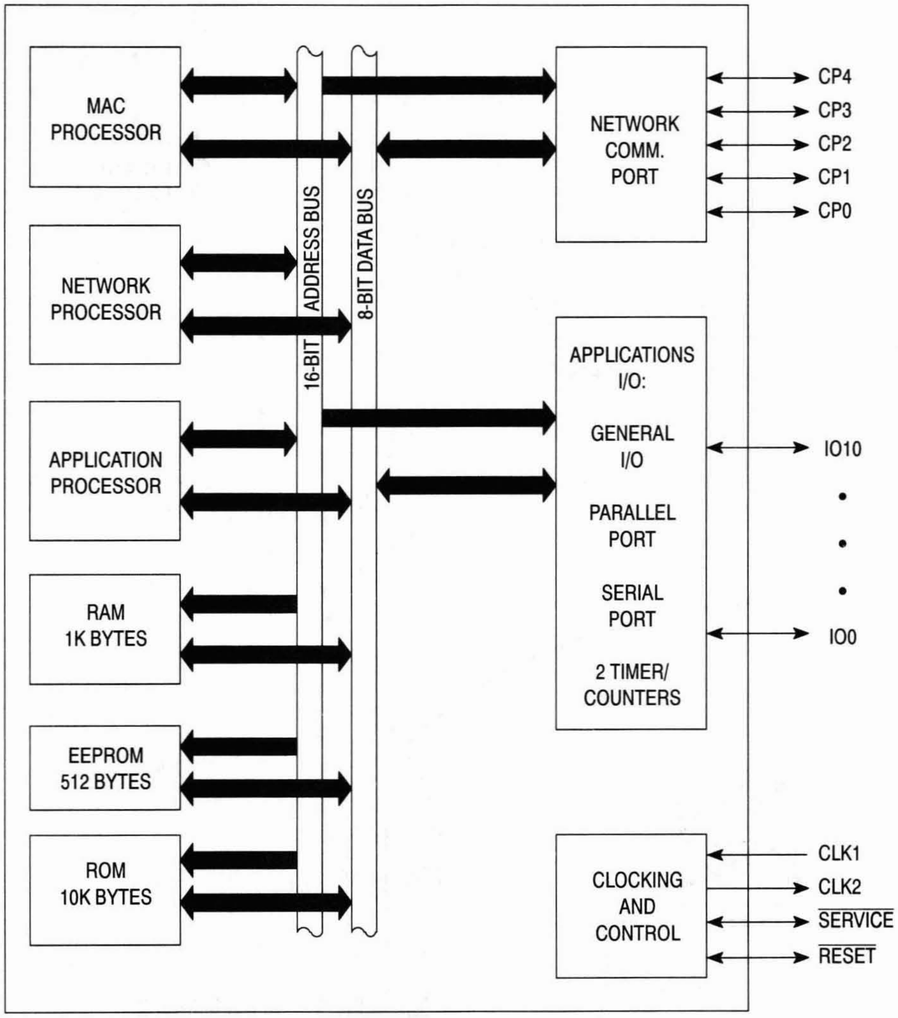

LONBUILDER Developer's Workbench

This integrated hardware and software environment provides the tools necessary to build a Local Operating Network (LON®). LONs consist of intelligent nodes that interact with their environment, and communicate with one another over a variety of communications media using a common, message-based control protocol. Each node contains sufficient computing resources to implement the protocol and perform the node's control function. In addition, each node includes a transceiver that couples the node to the communications media.

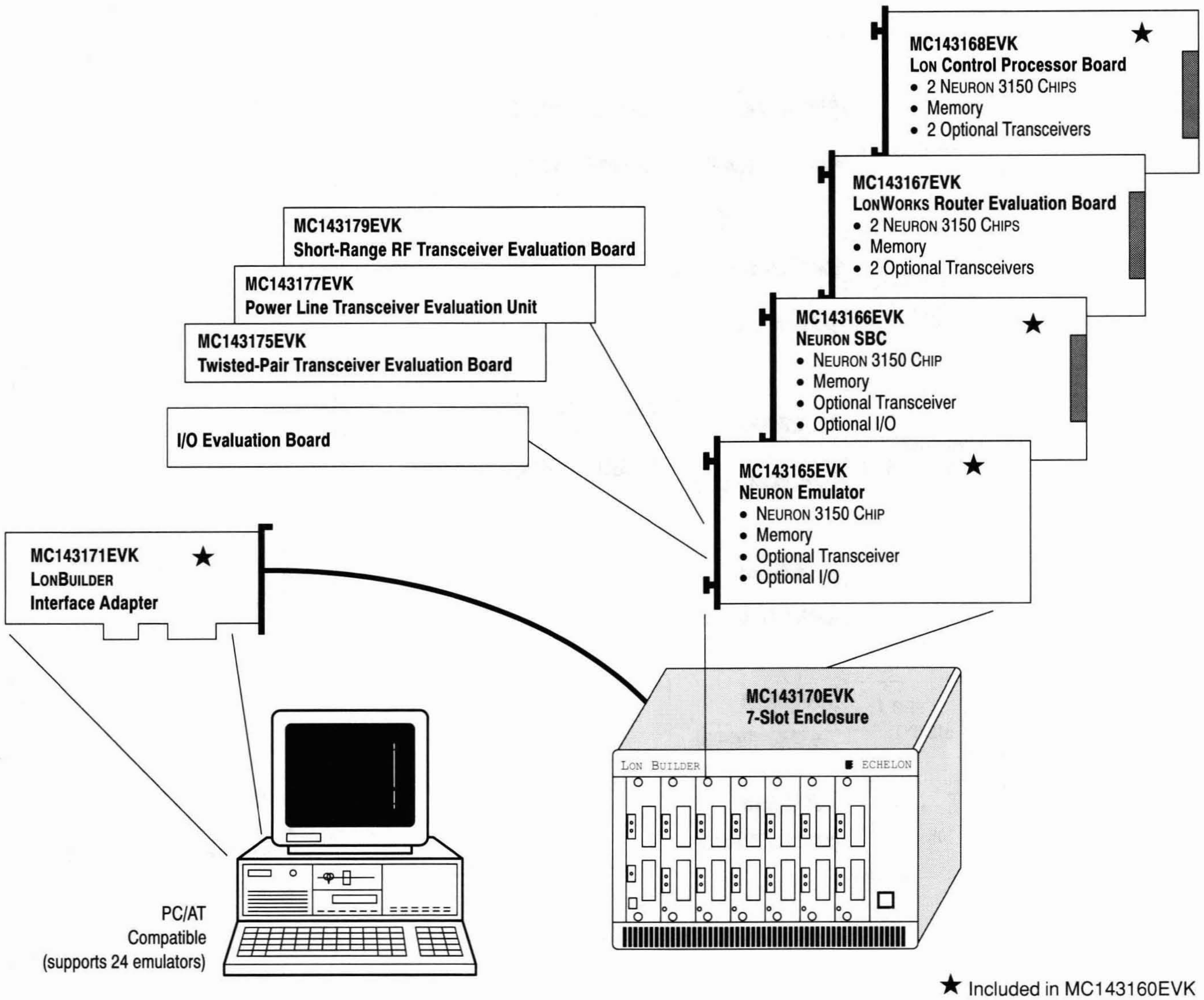

★ Included in MC143160EVK Starter Kit

LONBUILDER Starter Kit (MC143160EVK)

The LONBUILDER Starter Kit contains all the tools necessary to begin LONWORKS development on a PC/AT or compatible computer. The starter kit contains a LONBUILDER Development Station (7-slot enclosure and PC interface adapter board) and the Interactive Development Environment Software consisting of the Network Management Tools and the NEURON C Developer's Kit. The starter kit also contains two LONBUILDER NEURON CHIP Emulators. The backplane built into the enclosure can be used as an internal development network or optional LONBUILDER transceiver evaluation boards are available for external powerline, radio frequency, and twisted pair networks.

MOS Memories

In Brief . . .

Motorola's MOS memory portfolio has been expanded to support a broad range of engineering applications.

Technological leadership is the main goal for fast static RAMs. These high-density, high-speed products are targeted for specific solutions in microprocessor applications, providing access times as fast as 12 and 15 ns. Included in this portfolio are application-specific SRAMs, along with standard and custom static RAM modules. The CMOS devices, plus the BiCMOS RAMs, are the technology process drivers for the future.

The dynamic RAM operation uses alliances as a vehicle for global customer support in this highly competitive commodity memory market. The portfolio includes high-density DRAMs in a variety of operating modes and packages, and standard and custom modules up to 8M bytes to reach a broad range of responsive engineering solutions. Application-specific DRAM modules are available for many microprocessor applications that require high-density memory and implementation of byte parity logic and error detection and correction.

Page

Static RAMs 2-7.2
Fast Static RAMs 2-7.2
Fast Static RAM Modules 2-7.3
General Static RAMs 2-7.3
Application Specific Static RAMs 2-7.3
Dynamic RAMs 2-7.4
DRAMs 2-7.4
DRAM Modules 2-7.5

Static RAMs

Fast Static RAMs (10 to 55 ns)

Motorola is designing the fastest, most technologically advanced fast SRAMs. From 1.2 micron technology to sub-micron dimensions, devices are progressively smaller, faster, and lower cost. SRAMs developed with double-layer metal and BiCMOS technology will keep pace with machines of the future. Selected Fast Static RAMs are also available on 2M and 8M memory modules.

Density	Organization	Motorola Part Number	Pin Count	Packaging Package width in mils	Address/ Cycle Time (ns Max)	Technology	Comments
16K	2Kx8	MCM2018AN	24	300 (P)DIP	35/45/55	NMOS	Replaces TMM2019D, MCM2016HN, MCM2018N.
	4Kx4	MCM6268	20	300 (P)DIP	20/25/35/45	HCMOS	Not for new designs.
		MCM6269	20	300 (P)DIP	20/25/35	HCMOS	Fast Chip Select access time = 10/12/15 ns.
		MCM6270	24/22	300 (J)SOJ/(P)DIP	20/25/35	HCMOS	Fast Output Enable access time = 10/12/15 ns.
64K	8Kx8	MCM6264C	28	300 (J)SOJ/(P)DIP	12/15/20/25/35	HCMOS	12 ns available late 1Q92.
	8Kx9	MCM6265C	28	300 (J)SOJ/(P)DIP	12/15/20/25/35	HCMOS	12 ns available late 1Q92.
	16Kx4	MCM6288C	22	300 (P)DIP	12/15/20/25	HCMOS	
		MCM6290C	24	300 (J)SOJ/(P)DIP	10/12/15/20/25	HCMOS	Output Enable. 10 ns SOJ only.
	64Kx1	MCM6287	24/22	300 (J)SOJ/(P)DIP	12/15/20	HCMOS	Use 'B' device for new designs and quals.
		MCM6287B	24/22	300 (J)SOJ/(P)DIP	25/35	HCMOS	Mainframe applications, also use for parity.
256K	32Kx8	MCM6206C	28	300 (J)SOJ/(NP)DIP	15/17/20/25/30/35	HCMOS	Output Enable Access Time = 5 ns.
		MCM6706	28	300 (J)SOJ	10/12	BiCMOS	Evolutionary power pinout.
		MCM6706A	28	300 (J)SOJ	8/10/12	BiCMOS	Use for new qual and designs. Evolutionary pinout.
	32Kx9	MCM6205C	32	300 (J)SOJ/(NP)DIP	15/17/20/25/30/35	HCMOS	Output Enable Access Time = 5 ns.
		MCM6705	32	300 (J)SOJ	8/10/12	BiCMOS	Fastest 256K in the industry.
	64Kx4	MCM62L08	24	300 (J)SOJ/(P)DIP	25/35	HCMOS	Battery backup appl. I_{DR} = 50 µA. Main memory appl. I_{SB2} = 100 µA. Limited production.
		MCM6208C	24	300 (J)SOJ/(P)DIP	15/20/25/35	HCMOS	
		MCM6708	24	300 (J)SOJ	10/12	BiCMOS	
		MCM6708A	24	300 (J)SOJ	8/10/12	BiCMOS	Use for new quals and designs.
		MCM6709A	28	300 (J)SOJ/(P)DIP	8/10/12	BiCMOS	Use for new quals and designs.
		MCM62L09	28	300 (J)SOJ/(P)DIP	25/35	HCMOS	Battery backup appl. I_{DR} = 50 µA. Main memory appl. I_{SB2} = 100 µA. Limited production.
		MCM6209C	28	300 (J)SOJ/(P)DIP	15/20/25/35	HCMOS	Output Enable Access Time = 6 ns.
		MCM6709	28	300 (J)SOJ	10/12	BiCMOS	Output Enable
	256Kx1	MCM6207	24	300 (J)SOJ/(P)DIP	15/20/25	HCMOS	Separate I/O. Use 'C' device for new designs and quals.
		MCM6207C	24	300 (J)SOJ/(P)DIP	15/20/25	HCMOS	
		MCM62L07	24	300 (J)SOJ/(P)DIP	25	HCMOS	Battery backup appl. I_{DR} = 50 µA. Main memory appl. I_{SB2} = 100 µA. Limited production.
1M	128Kx8	MCM6226	32	400 (WJ)SOJ	25/30	HCMOS	Sampling now.
		MCM6226A	32	400 (WJ)SOJ	20/25/30	HCMOS	Will replace MCM6226.
		MCM6726	32	400 (WJ)SOJ	10/12/15	BiCMOS	Sampling 1Q92. Revolutionary Pinout.
	256Kx4	MCM6229	28	400 (WJ)SOJ	25/30	HCMOS	6228 Part Number changed to 6229. Limited production.
		MCM6229A	28	400 (WJ)SOJ	20/25/30	HCMOS	Will replace MCM6229.
		MCM6728	28	400 (WJ)SOJ	10/12/15	BiCMOS	Sampling 1Q92. Revolutionary Pinout.
		MCM6729	32	400 (WJ)SOJ	10/12/15	BiCMOS	WIth Output Enable. Sampling 1Q92. Revolutionary Pinout.
		MCM67282	32	400 (WJ)SOJ	10/12/15	BiCMOS	Separate I/O. Sampling 1Q92. Revolutionary Pinout.
	1Mx1	MCM6227	28	400 (WJ)SOJ	20/25/30	HCMOS	Separate I/O.
		MCM6727	28	400 (WJ)SOJ	10/12/15	BiCMOS	Separate I/O. Sampling 1Q92. Revolutionary Pinout.
		MCM101510	28	FLATPACK	10/12/15	BiCMOS	100K ECL @ – 5.2 V Compatible
	256Kx4	MCM101514	32	FLATPACK	10/12/15	BiCMOS	100K ECL @ – 5.2 V Compatible

NOTE: Package suffixes are enclosed by ( ) in packaging column.

Fast Static RAM Modules

Density	Organi-zation	Motorola Part Number	Pin Count	Packaging	Address/ Cycle Time (ns Max)	Tech-nology	Comments
2M	64Kx32	MCM3264Z	64	ZIP	15/20	HCMOS	Perfect for 32-bit system, JEDEC standard.
	256Kx8	MCM8256Z	60	ZIP	15/20	HCMOS	JEDEC standard module.
	2x32Kx36	MCM36232Z	76	ZIP	17/20/25	HCMOS	Designed for parity applications.
8M	256Kx32	MCM32257Z	64	ZIP	25/30	HCMOS	High density module using 1M fast SRAMs.

General Static RAMs (HCMOS unless otherwise noted)

Density	Organi-zation	Motorola Part Number	Pin Count	Packaging Package width in mils	Address Access Time (ns Max)	Operating Current (mA Max)	Comments
16K	2Kx8	MCM2018AN	24	300 (P)DIP	35/45/55	135	NMOS. Replaces TMM2019D, MCM2016HN, MCM2018N.
256K	32Kx8	MCM60L256A-C	28	600 (P)DIP, 330 (F)SOG	100	70	Industrial temp range (–40° to +85°C), low power.
		MCM60L256A-V	28	600 (P)DIP, 330 (F)SOG	100	70	Extended temp range (–40° to +105°C), low power.

Application Specific Static RAMs

Application specific memories are designed for high-performance microprocessors that require more specialization from memory cache than is available from standard devices. Products include those for use with digital signal processors as well as a variety of popular microprocessors.

Description	Organi-zation	Motorola Part Number	Pin Count	Packaging	Address/ Cycle Time (ns Max)	Tech-nology	Comments
Cache Tag RAM	4Kx4	MCM4180	24/22	300 (J)SOJ/(P)DIP	18/20	HCMOS	Pin and function compatible with Mostek MK41H80. Do not use for new designs.
Cache Tag RAM with Status Bit Registers	4Kx4	MCM62351	24	300 (P)DIP	20/25	HCMOS	Housekeeping bits function, open drain match output. Flash clearable. Do not use for new designs.
Synchronous Static RAM	16Kx4	MCM6294	28	300 (NJ)SOJ/(P)DIP	20/25	HCMOS	Registered outputs plus output enable, separate I/O's.
		MCM6295	28	300 (NJ)SOJ/(P)DIP	25/30	HCMOS	Transparent outputs plus output enable, separate I/O's.
	64Kx4	MCM62980	28	300 (J)SOJ	15/20	HCMOS	For RISC and CISC systems; 1-stage pipeline.
		MCM62982	28	300 (J)SOJ	12/15	HCMOS	Registered outputs for two stage pipeline.
	16Kx16	MCM62990	52	(FN) PLCC	17/20	HCMOS	Designed for advanced RISC-CISC cache applications.
		MCM62990A	52	(FN) PLCC	12/15/20/25	HCMOS	Designed for advanced RISC-CISC cache applications.
	4x64Kx1	MCM62981	32	300 (J)SOJ	15/20	HCMOS	Parity applications. Individual bit control, 1-stage pipeline.
		MCM62983	32	300 (J)SOJ	12/15	HCMOS	Parity applications. Individual bit control, 2-stage pipeline.
	4Kx10	MCM62963	44	(FN) PLCC	30	HCMOS	Registered addresses and outputs, separate I/O with Chip Enable.
		MCM62963A	44	(FN) PLCC	30	HCMOS	Will Replace MCM62963.
	4Kx12	MCM62973	44	(FN) PLCC	18/20	HCMOS	Same as MCM62963 but with 12 I/O's.
		MCM62973A	44	(FN) PLCC	18/20	HCMOS	Will Replace MCM62973.
		MCM62975	44	(FN) PLCC	25/30	HCMOS	Registered addresses with Output Enable.
		MCM62975A	44	(FN) PLCC	25/30	HCMOS	Will Replace MCM62975.
	32Kx9	MCM62940	44	(FN) PLCC	14/19/24	HCMOS	Burst mode for 040 applications.
		MCM62940A	44	(FN) PLCC	12/14/19/24	HCMOS	Will Replace MCM62940.
		MCM62950	44	(FN) PLCC	20/25	HCMOS	Designed for advanced RISC-CISC cache applications.
		MCM62950A	44	(FN) PLCC	15/20/25	HCMOS	Will Replace MCM62950.
		MCM62960	44	(FN) PLCC	17/24	HCMOS	Designed for high performance SPARC™ applications.
		MCM62960A	44	(FN) PLCC	15/17/24	HCMOS	Will Replace MCM62960.
		MCM62486	44	(FN) PLCC	14/19/24	HCMOS	Burst mode for 486 applications.
		MCM62486A	44	(FN) PLCC	12/14/19/24	HCMOS	Burst mode for 486 applications >50 MHz.
		MCM62110	52	(FN) PLCC	15/17/20	HCMOS	Dual I/O's for 88110 and other multiprocessor applications.
DSPRAM	8Kx24	MCM56824	52	(FN) PLCC	25/30/35	HCMOS	Designed for DSP56001 applications, replaces 3 8Kx8's.
		MCM56824A	52	(FN) PLCC	20/25/35	HCMOS	Designed for DSP56001 applications, replaces 3 8Kx8's.
Latched Address SRAM	8Kx20	MCM62820	52	(FN) PLCC	23	HCMOS	Designed for MIPS R3000 cache.
		MCM62820A	52	(FN) PLCC	17/23	HCMOS	Designed for MIPS R3000 cache.
	16Kx16	MCM62995	52	(FN) PLCC	17/20	HCMOS	DSP96000 and MIPS R3000 applications. Latch on address inputs use "A" for new designs and quals.
		MCM62995A	52	(FN) PLCC	12/15/20/25	HCMOS	
Asynchronous Static RAM	16Kx16	MCM62996	52	(FN) PLCC	12/15/20/25	HCMOS	Choice of 5 V or 3.3 V power supplies for output buffers. For wide bus applications.

NOTE: Package suffixes are enclosed by ( ) in packaging column.

Dynamic RAMs

DRAMs offer the lowest cost per bit of any memory. Because of this, they are very popular for a wide range of applications, particularly for high-density memories involving very high memory capacity such as mainframe computers, personal computers, and workstations. Motorola's dynamic RAM portfolio includes 1M and 4M devices with ×1 and ×4 organizations in fast page, nibble, and static column mode options that significantly reduce access time. These devices are also available on memory modules in densities to 64M, with and without parity and error correction.

All devices are fabricated using HCMOS technology and designed for single 5-volt power supply operation. All have $\overline{\text{CAS}}$ before $\overline{\text{RAS}}$ and $\overline{\text{RAS}}$ only refresh modes.

DRAMs

Density	Organization	Motorola Part Number	Pin Count	Packaging Package width in mils	Address Access Time (ns Max)	Operating Current (mA Max)	Comments
1M	1Mx1	MCM511000A	18, 20, 20/26	300 (P)DIP, 100 (Z)IP, 300 SO(J)	70/80/100	80/70/60	Fast page mode cycle time = 40/45/55 ns
		MCM511000A-C	18, 20, 20/26	300 (P)DIP, 100 (Z)IP, 300 SO(J)	70/80/100	85/75/65	Industrial temp range (–40° to +85°C)
		MCM51L1000A	18, 20, 20/26	300 (P)DIP, 100 (Z)IP, 300 SO(J)	70/80/100	80/70/60	Fast page mode with low power battery backup
		MCM51L1000A-C	18, 20, 20/26	300 (P)DIP, 100 (Z)IP, 300 SO(J)	70/80/100	85/75/65	Industrial temp range (–40° to +85°C), low power
		MCM511000B	20, 20/26	100 ZIP, 300 SOJ	60/80	90/70	Fast page mode cycle time = 40 ns
		MCM51L1000B	20, 20/26	100 ZIP, 300 SOJ	60/80	90/70	Fast page mode with low power battery backup
		MCM511001A	18, 20, 20/26	300 (P)DIP, 100 (Z)IP, 300 SO(J)	70/80/100	80/70/60	Nibble mode access time = 35/35/40 ns
		MCM511002A	18, 20, 20/26	300 (P)DIP, 100 (Z)IP, 300 SO(J)	70/80/100	80/70/60	Static column mode cycle time = 40/45/55 ns
	256Kx4	MCM514256A	20, 20, 20/26	300 (P)DIP, 100 (Z)IP, 300 SO(J)	70/80/100	80/70/60	Fast page mode cycle time = 40/45/55 ns
		MCM514256A-C	20, 20, 20/26	300 (P)DIP, 100 (Z)IP, 300 SO(J)	70/80/100	85/75/65	Industrial temp range (–40° to +85°C)
		MCM51L4256A	20, 20, 20/26	300 (P)DIP, 100 (Z)IP, 300 SO(J)	70/80/100	80/70/60	Fast page mode with low power battery backup
		MCM51L4256A-C	20, 20, 20/26	300 (P)DIP, 100 (Z)IP, 300 SO(J)	70/80/100	85/75/65	Industrial temp range (–40° to +85°C), low power
		MCM514256B	20, 20/26	100 ZIP, 300 SOJ	60/80	90/70	Fast page mode cycle time = 40 ns
		MCM51L4256B	20, 20/26	100 ZIP, 300 SOJ	60/80	90/70	Fast page mode with low power battery backup
		MCM514258A	20, 20, 20/26	300 (P)DIP, 100 (Z)IP, 300 SO(J)	70/80/100	80/70/60	Static column mode cycle time = 40/45/50 ns
4M	4Mx1	MCM54100A	20/26	300(T)SOP	60/70/80	120/100/85	Fast page mode cycle time = 45/45/50 ns
		MCM54100A	20, 20/26	100 (Z)IP, 300 SOJ(N)	60/70/80	120/100/85	Fast page mode cycle time = 45/45/50 ns
		MCM54100A-C	20, 20/26	100 (Z)IP, 300 SOJ(N)	70/80	120/100/85	Industrial temp range (–40° to +85°C)
		MCM5L4100A	20, 20/26	100 (Z)IP, 300 SOJ(N)	60/70/80	120/100/85	Fast page mode, low power
		MCM54101A	20, 20/26	100 (Z)IP, 300 SOJ(N)	60/70/80	120/100/85	Nibble mode cycle time = 40/40/40 ns
		MCM54102A	20, 20/26	100 (Z)IP, 300 SOJ(N)	60/70/80	120/100/85	Static column cycle time = 35/40/45 ns
	1Mx4	MCM54400A	20/26	300(T)SOP	60/70/80	120/100/85	Fast page mode cycle time = 45/45/50 ns
		MCM54400A	20, 20/26	100 (Z)IP, 350 SO(J), 300 SOJ(N)	60/70/80	120/100/85	Fast page mode cycle time = 45/45/50 ns
		MCM54400A-C	20, 20/26	100 (Z)IP, 350 SO(J), 300 SOJ(N)	70/80	120/100/85	Industrial temp range (–40° to +85°C)
		MCM5L4400A	20, 20/26	100 (Z)IP, 350 SO(J), 300 SOJ(N)	60/70/80	120/100/85	Fast page mode, low power
		MCM54402A	20, 20/26	100 (Z)IP, 350 SO(J), 300 SOJ(N)	60/70/80	120/100/85	Static column mode cycle time = 35/40/45 ns
		MCM54410A	20, 20/26	100 (Z)IP, 350 SO(J), 300 SOJ(N)	60/70/80	120/100/85	Write per bit
	512Kx8	MCM54800A	28	100 (Z)IP, 400 SO(J), 400(T)SOP	70/80/100	105/90/80	Fast page mode cycle time = 45/50/60 ns
		MCM5L4800A	28	100 (Z)IP, 400 SO(J), 400(T)SOP	70/80/100	105/90/80	Fast page mode with low power battery backup
		MCM5V4800A	28	100 (Z)IP, 400 SO(J), 400(T)SOP	70/80/100	105/90/80	Fast page mode with low power self refresh

NOTE: Package suffixes are enclosed by ( ) in packaging column.

DRAM Modules

Byte Density	Organi-zation	Motorola Part Number	Pin Count	Packaging	Address Access Time (ns Max)	Operating Current (mA Max)	Comments
1MB	1Mx8	MCM81000A MCM8L1000A MCM81001 MCM81002 MCM81430 MCM8L1430	30 30 30 30 30 30	(S)IMM, (L)SIP, (LH)SIP (S)IMM, (L)SIP (S)IMM, (L)SIP (S)IMM, (L)SIP (S)IMM (S)IMM	70/80/100 70/80/100 70/80/100 70/80/100 60/70/80/100 60/70/80/100	640/560/480 640/560/480 640/560/480 640/560/480 240/200/170/150 240/200/170/150	Fast page mode cycle time = 40/45/44 ns Fast page mode with lower power battery backup Nibble mode access time = 35/35/40 ns Static column mode cycle time = 40/45/55 ns Two chip derivative of MCM81000A Low power, two chip derivative of MCM81000A
1MB with Parity	1Mx9	MCM91000A MCM9L1000A MCM91001 MCM91002 MCM91430 MCM9L1430	30 30 30 30 30 30	(S)IMM, (L)SIP, (LH)SIP, (SG)-gold (S)IMM, (L)SIP, (SG)-gold (S)IMM, (L)SIP (S)IMM, (L)SIP (S)IMM (S)IMM	70/80/100 70/80/100 70/80/100 70/80/100 70/80/100 70/80/100	720/630/540 720/630/540 720/630/540 720/630/540 280/240/210 280/240/210	Fast page mode cycle time = 40/45/55 ns Fast page mode with low power battery backup Nibble mode access time = 35/35/40 ns Static column mode cycle time = 40/45/50 ns Three chip derivative of MCM91000A Low power, three chip derivative of MCM91000A
256 KB	256Kx8	MCM84256 MCM8L4256	30 30	(S)IMM (S)IMM	70/80/100 70/80/100	160/140/120 160/140/120	Fast page mode cycle time = 40/45/55 ns Fast page mode with low power battery backup
256 KB with Parity	256Kx9	MCM94256 MCM94256A MCM9L4256 MCM9L4256A	30 30 30 30	(S)IMM (S)IMM (S)IMM (S)IMM	70/80/100 70/80/100 70/80/100 70/80/100	225/195/165 240/210/180 225/195/165 240/210/180	Fast page mode cycle time = 40/45/55 ns Same as MCM94256 with 1M as parity Fast page mode with low power battery backup Same as MCM9L4256 with 1M as parity
4MB	4Mx8	MCM84000A MCM8L4000A MCM84030	30 30 30	(S)IMM (S)IMM (LH)SIP	60/70/80/100 60/70/80/100 60/70/80/100	960/800/680/600 960/800/680/600 960/800/680/600	Fast page mode cycle time = 50/60 ns Fast page mode with low power battery backup Low height 4Mx9 SIP
4MB with Parity	4Mx9	MCM94000A MCM9L4000A MCM94030	30 30 30	(S)IMM (S)IMM (LH)SIP	60/70/80/100 60/70/80/100 60/70/80/100	1080/900/765/675 1080/900/765/675 1080/900/765/675	Low height 4Mx9 using MCM54100 DRAM Low power, low height 4Mx9 Low height 4Mx9 SIP
1MB	256Kx32	MCM32256 MCM32256A	72 72	(S)IMM, (SG)-gold (S)IMM, (SG)-gold	70/80/100 70/80/100	640/560/480 640/560/480	Fast page mode cycle time = 40/45/55 ns Layout revision of MCM32256
2MB	512Kx32	MCM32512 MCM32512A	72 72	(S)IMM, (SG)-gold (S)IMM, (SG)-gold	70/80/100 70/80/100	656/576/496 656/576/496	Fast page mode cycle time = 40/45/55 ns Layout revision of MCM32512
4MB	1Mx32	MCM32130	72	(SH)IMM	60/70/80	960/800/680/600	Fast page mode cycle time = 40/45/55 ns
8MB	2Mx32	MCM32230	72	(SH)IMM	60/70/80	976/816/696/616	Fast page mode cycle time = 40/45/55 ns
1MB with Parity	256Kx36	MCM36256	72	(S)IMM, (SG)-gold	70/80/100	940/820/700	Fast page mode cycle time = 40/45/55 ns
2MB with Parity	512Kx36	MCM36512	72	(S)IMM, (SG)-gold	70/80/100	964/844/724	Fast page mode cycle time = 40/45/55 ns
4MB with Parity	1Mx36	MCM36100A	72	(S)IMM, (SG)-gold	80/100	1120/960	Fast page mode cycle time = 40/45/55 ns
8MB with Parity	2Mx36	MCM36200A	72	(S)IMM, (SG)-gold	80/100	1144/984	Fast page mode cycle time = 40/45/55 ns
1MB used for EDC	256Kx40	MCM40256	72	(S)IMM, (SG)-gold	70/80/100	800/700/600	MCM36256 with error correction applications
2MB used for EDC	512Kx40	MCM40512	72	(S)IMM, (SG)-gold	70/80/100	820/720/620	MCM36512 with error correction applications
4MB used for EDC	1Mx40	MCM40100	72	(S)IMM, (SG)-gold	60/70/80/100	1200/1000/850/750	MCM36100A with error correction applications
8MB used for EDC	2Mx40	MCM40200	72	(S)IMM, (SG)-gold	60/70/80/100	1220/1020/870/770	MCM36200A with error correction applications

NOTE: Package suffixes are enclosed by ( ) in packaging column.

LH = Low Height SIP
SG = Gold Pad SIMM
SH = Low Height SIMM
SHG = Low Height Gold Pad SIMM
Z = Zig-Zag Leaded Module

TTL, ECL, CMOS AND SPECIAL LOGIC CIRCUITS

In Brief . . .

Since the inception of IC technology, Motorola has earned a reputation as the supermarket for digital logic circuits. Although early circuit designs such as RTL, DTL, HTL, etc., have been largely supplanted by newer techniques, Motorola's reputation as a leading-edge supplier of standard logic families remains unchallenged.

Motorola currently concentrates on supplying those logic families and functions that advance the state-of-the-art as well as serving the needs of designers requiring interface circuits for more complex ICs and semicustom designs. It does so with three technologies:

ECL	(four unique families), for high speed
TTL	(two families), for high performance at lower cost
CMOS	(three families), for lowest power dissipation

This selector guide contains only devices in production at Motorola's Logic I.C. Division, accurate to the date of publication.

There are numerous new devices introduced between printings of the Master Selector Guide. Therefore, the Logic Division publishes a selector guide on a quarterly basis. This selector guide, SG366/D, can be ordered from your nearest Motorola Sales Office or from the Motorola Literature Distribution Center.

The Logic I.C. Division publishes a New Product Calendar quarterly that reflects any recent device releases and the approximate dates new devices are expected to be released.

There are many new devices in various stages of development on Motorola's Logic I.C. Division design schedule. Call your nearest Motorola Sales Office for the current status of any device not listed within this guide.

Page

Which Logic Family Is Best for You? 3.1-1
Selection By Function 3.1-5
TTL 3.1-20
MECL 3.1-29
CMOS 3.1-36
Special Logic Circuits 3.1-50
Ordering Information 3.1-55
Case Information 3.1-57
Packaging Information 3.1-61

Which Logic Family Is Best for You?

By Gary Tharalson, Motorola, Inc., Mesa, AZ

Selecting a logic family for a new design from today's rapidly changing semiconductor technologies can be a perilous task. There are huge ratios between the highest and lowest values of several characteristics — for speed it's 250:1, power 83,000:1, and output drive 24:1. With the many choices available, it is easy to under- or over-supply an application with inadequate or excessive capabilities.

Logic Families

Although many family technologies are available, they can be divided into roughly three broad categories: transistor-to-transistor logic (TTL), complementary metal-oxide semiconductor (CMOS) technology, and emitter coupled logic (ECL). TTL and ECL are bipolar technologies that differ in implementation techniques while CMOS (an MOS technology) differs in fundamental transistor structure and operation.

The designation "bipolar" refers to the basic component of TTL ICs, the bipolar npn transistor. Since the output drivers and the input buffers both use transistors, there is a direct transistor-to-transistor connection. Older technologies were interconnected via passive components like resistors and diodes.

Since the original TTL design, several enhancements have reduced power and increased speed. Common to these has been the use of Schottky diodes, which, ironically, no longer result in strictly TTL connections. The two names, Schottky and TTL, are used in combination: LS (Low power Schottky), ALS (Advanced Low power Schottky), and National Semiconductor's FAST (Advanced Schottky) TTL.

The outstanding characteristics of TTL compared to CMOS in the past have been its higher speed, output drive, and transistor gain. These advantages are rapidly diminishing.

CMOS field-effect transistors differ from bipolar transistors both in structure and operation. The primary advantages of CMOS are its low power dissipation and small physical geometry. Recent advances in design and fabrication have brought CMOS devices into the same speed and output drive arena as TTL. Again, enhancements have resulted in additional classifications: MG (Metal-Gate CMOS), HC (High-speed silicon gate CMOS), and National Semiconductor's FACT (Advanced CMOS).

ECL derives its name from the common differential-amplifier configuration in which one side of the diff-amp consists of multiple input bipolar transistors with their emitters tied together. An input bias on the opposite side of the diff-amp causes the amplifier to operate continuously, rather than saturating high or low. Consequently, ECL consumes a lot of power in either state but results in the fastest switching speeds of all the logic families listed in the *table*, "Characteristics of Logic Families."

There have also been many evolutionary advancements in ECL. Three of the most recent families are 100K (1975), 10H (1981), and Motorola's ECLinPS (1987).

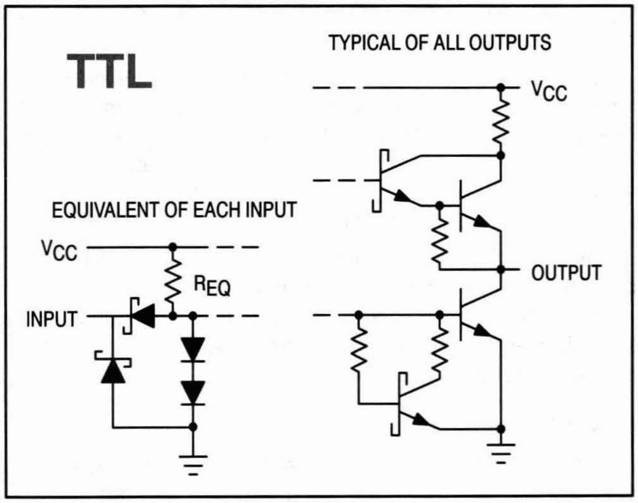

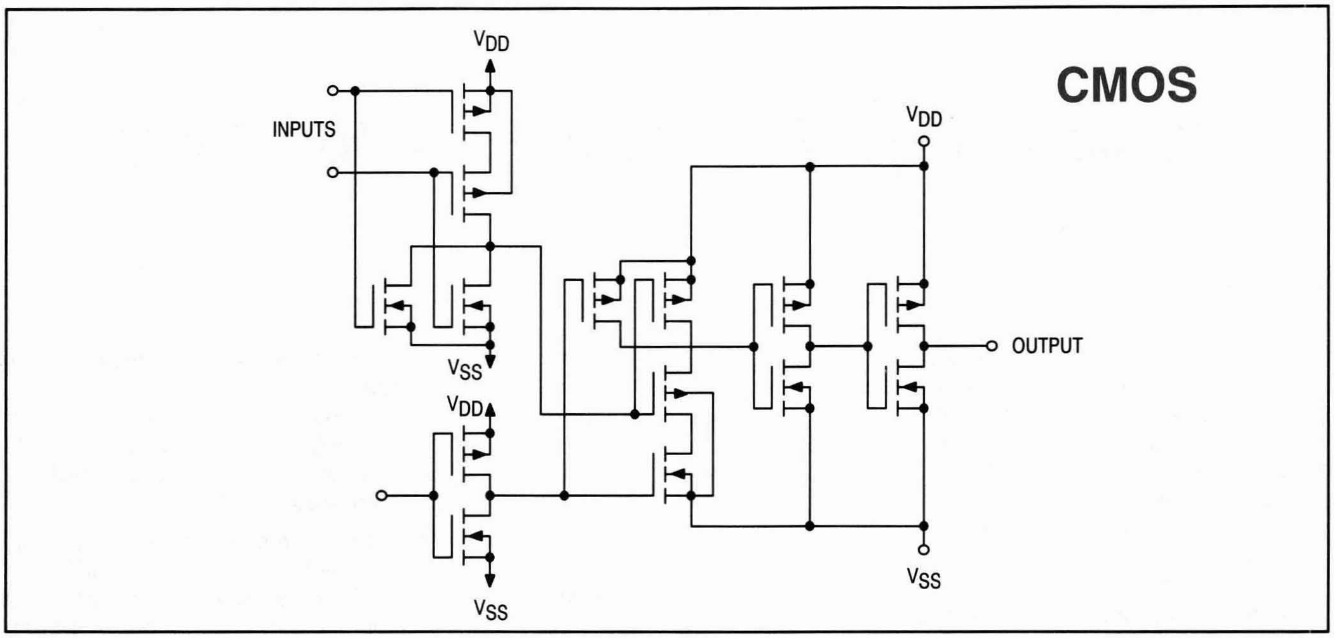

Speed

Speed is typically the first specification designers look at. When they are asked what features of a logic family they would like enhanced, usually they want more speed. But increased speed often brings potential problems, including increased noise generation, higher power consumption, increased component and system cost, and more difficult board layout. Obviously, the other family characteristics must be considered.

In the table, family speed is compared using typical values for three specs: propagation delay through a simple gate, flip-flop toggle frequency, and output switching time. Typical values can be misleading because they are frequently specified according to different vendors' criteria, but they are usually an average of minimum and maximum values.

For a final assessment of a particular component's performance, the minimum/maximum specifications in most vendors' data books should be examined. Furthermore, the switching (edge) rate is highly load dependent. Once again, data book specifics must be compared.

Power Consumption

The amount of power an application consumes and the heat generated are frequently of prime importance. Power dissipation, one of the major differences between the three families, may limit the designer's choices.

TTL power consumption is moderate and constant over operating frequencies up to about 10 MHz. It then begins to climb rapidly. Although only a few milliwatts are consumed by each device, a complete system may use substantial power.

CMOS power consumption, on the other hand, is highly frequency dependent. At quiescent (zero frequency), it consumes almost no power at all, measured in microwatts per device. However, its consumption grows almost linearly with frequency, so at maximum operating frequency it may be several milliwatts per device. The great power advantage of CMOS derives from the fact that in most applications, most of the devices will not be operating at high frequencies at any given time. Consequently, the average system power is greatly diminished.

Because of its inherent design, ECL consumes the most power at frequencies below about 30 MHz. However, at higher frequencies, TTL and CMOS can consume more. The power used by ECL is fairly constant over its entire operating frequency range. Designers of large, high-performance ECL systems may have to use more complex cooling and power distribution techniques.

CHARACTERISTICS OF LOGIC FAMILIES

TYPICAL COMMERCIAL PARAMETER (0°C TO +70°C)	LOGIC FAMILIES								
	TTL			CMOS			ECL		
	LS	ALS	FAST	MG	HC	FACT	10H	100K	ECLinPS***
SPEED									
OR gate propagation delay (t_{PLH}) (ns)	9	7	3	25	8	5	1	0.75	0.33
D flip-flop toggle rate (MHz)	33	45	125	4	45	160	330	400	1,000
Output edge rate (ns)	6	3	2	100	4	2	1	0.7	0.5
POWER CONSUMPTION PER GATE (mW)									
Quiescent	5	1.2	12.5	0.0006	0.003	0.003	25	50	25
Operating (1 MHz)	5	1.2	12.5	0.04	0.6	0.8	25	50	25
SUPPLY VOLTAGE (V)	+4.5 to +5.5	+4.5 to +5.5	+4.5 to +5.5	+3 to 18	+2 to 6	+2 to 6	–4.9 to –5.5	–4.2 to –4.8	–4.9 to –5.5/ –4.2 to –4.8
OUTPUT DRIVE (mA)	8	8	20	1	4	24	50–Ω load	50–Ω load	50–Ω load
DC NOISE MARGIN (%)*									
High Input	22	22	22	30	30	30	27	41	28/41
Low Input	10	10	10	30	30	30	31	31	31/31
Packaging									
DIP	Yes	Yes	Yes	Yes	Yes	Yes	Yes	Yes	No
SO	Yes	Yes	Yes	Yes	Yes	Yes	No	No	No
PLCC	No	Yes	Yes	No	No	Yes	Yes	No	Yes
FUNCTIONAL DEVICE TYPES	190	210	110	125	103	80**	85	44	30
RELATIVE 1–25 QTY PRICE/GATE	0.9	1	1	0.9	0.9	1.5	2	10	28

* Typical noise margin expressed as a percentage of typical output voltage swing.

** Combined Motorola and National Semiconductor Corp. offering.

*** ECLinPS is available in both 10H- and 100K-compatible versions.

Manufacturers referenced:
- (LS) Motorola Low power Schottky TTL
- (ALS) Texas Instruments Advanced Low power Schottky TTL
- (FAST) Motorola Advanced Schottky TTL
- (MG) Motorola 14000 Series Metal Gate CMOS
- (HC) Motorola High-speed silicon gate CMOS
- (FACT) Motorola Advanced CMOS
- (10H) Motorola 10H Series ECL
- (100K) National 100K Series ECL
- (ECLinPS) Motorola advanced ECL

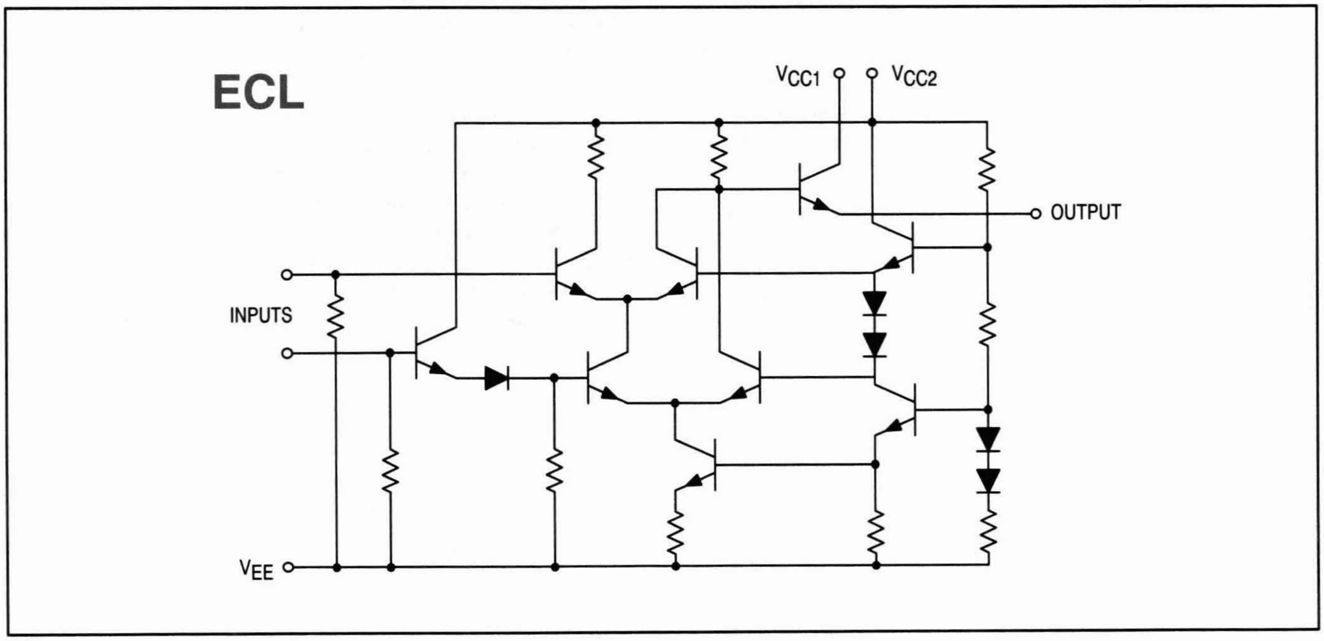

Supply Voltage

The power supply voltage required for TTL and ECL is restricted to fixed values. Only a narrow voltage variation is allowed for the device to remain within specifications. Since these families also consume substantial amounts of power, there is a large current flow through the power lines.

To avoid unacceptable voltage fluctuation, various preventive measures may be necessary, such as remote sensing of the supply regulator, heavy power buses and filters, and multilayer pc boards with separate power and ground planes. Typically, a high-speed energy-storage capacitor is required near each logic device. That capacitor maintains the correct device voltage during high current switching.

An important advantage of CMOS is the large range of supply voltage over which operation is specified, particularly at lower values. By allowing systems to be operated at voltages as low as 2 to 3 V, not only is power consumption lowered but noise generation from fast signal switching is reduced. In similar fashion, the narrow switching level swings of ECL (about 800 mV) helps to moderate its noise generation.

Output drive

An important characteristic of a logic device is its ability to drive relatively large loads directly. This eliminates the requirement for special interface buffers. The older families within TTL and especially CMOS had only limited drive capability (be low 10 mA). All of the advanced logic family versions have significantly increased drive capacity. Several (FACT and all ECL) are capable of driving 50-Ω transmission lines directly. Furthermore, because of the symmetrical sink/source capability of FACT, its rise and fall times are nearly equal, resulting in balanced delay times.

Noise Margin

Noise immunity refers to the resistance of a logic device to undesired switching. Depending on the input level, a noise glitch that causes a transient large enough to cross the input switch point can result in erroneous operation. Clearly, the larger the voltage difference between the switch point and the normal input high and low levels, the more the immunity to erroneous switching. In the table, these differences are expressed as a percentage of the swing between typical output high- and low-voltage logic levels.

The venerable dual-in-line package (DIP) has been, and still is, very popular. One reason is the ease with which prototype circuits using it can be fabricated and debugged. Particularly prominent is that an industry standard pinout arrangement, which puts power and ground on the end pins, has been adopted for all the TTL and CMOS families in the accompanying table.

Package Standardization

This standard package not only eases design procedures but also simplifies final production testing. This same standardization has been carried over to the new small-outline (SO) package for surface mounting. The SO package averages about 70% smaller in footprint than a DIP.

Fast switching of several outputs simultaneously (such as on an octal interface device) may result in a phenomenon called “ground bounce” voltage. This results partially from ground path current flow through internal lead inductance, and from the interaction between internal input and output ground paths.

Although present ground bounce voltage is well below CMOS trigger levels, TTL input devices may require special consideration. A number of approaches to internal circuit and package design have been developed to reduce ground current effects. Indications are that ground bounce will soon be reduced to nominal levels.

More Devices, Less Space

Lower product costs can result from packing more logic devices into less pc board space and then using automation to assemble and test the product. This opportunity is vastly enhanced by the ability of present technology to supply thousands of identical surface-mounting packages on a single large tape-and-reel for high-speed pick-and-place machines. A user’s package preference — SO or PLCC — is dictated mainly by the available production assembly capabilities.

Package material has also benefited from improvements in manufacturing technology. Thus, the majority of packages that are shipped today (for commercial applications) are constructed from relatively inexpensive plastic material.

Mix and match

Many designers have found that the best approach to achieving their particular application performance goal is to combine devices from several families. This is particularly easy in the TTL and CMOS families because of their industry-standard pinouts, particularly for power and ground.

The obvious advantage of mixing and matching is to optimize the requirements of selected portions of a design, whether for speed, power consumption, output drive, or cost. Some disadvantages are that devices must be analyzed and tested for compatibility, inventories may increase, and some performance parameters may be compromised.

— Reprinted from Electronic Products, May 1989.

Selection By Function

Cross-Functional Tables

Function	TTL LS	TTL FAST	CMOS STD	CMOS High Speed	CMOS FACT	MECL 10K	MECL 10H	MECL ECLinPS
AND Gates								
Quad 2-Input	08	08	081	08	08	104	104	
Quad 2-Input, Open-Collector	9							
Triple 3-Input	11	11	073	11	11			
Triple 3-Input, Open-Collector	15							
Dual 4-Input	21	21	082					
Hex						197		
Quad Differential								E404
Quint 2-Input								E104
NAND Gates								
Quad 2-Input	00	00	011	00	00			
Quad 2-Input, Open-Collector	01							
Quad 2-Input, Open-Collector	03			03				
Quad 2-Input, High-Voltage	26							
Quad 2-Input Buffer	37	37						
Quad 2-Input Buffer, Open-Collector	38	38						
13-Input	133			133				
Triple 3-Input	10	10	023	10	10			
Triple 3-Input, Open-Collector	12							
Dual 4-Input	20	20	012	20	20			
Dual 4-Input, Open-Collector	22							
Dual 4-Input Buffer	40	40						
8-Input	30		068	30				
Quad 2-Input NAND With Schmitt Trigger Inputs	132	132	093	132	132			
Quad Differential								E404
Quint 2-Input								E104
OR Gates								
Quad 2-Input	32	32	071	32	32	103	103	
Dual 3-Input 3-0utput						110		
High-Speed Dual 3-Input 3-0utput						210	210	
Triple 3-Input			075	4075				
Dual 4-Input			072					
Quad 4-Input								E101

Selection By Function (continued)

	TTL		CMOS			MECL		
Function	LS	FAST	STD	High Speed	FACT	10K	10H	ECLinPS
NOR Gates								
Quad 2-Input	02	02	001	02 36	02	102	102	
Quad 2-Input Buffer	28							
Quad 2-Input Buffer, Open-Collector	33							
Dual 5-Input	260							
Triple 3-Input	27		025	27				
Quad 2-Input With Strobe						100	100	
Triple 4-3-3 Input						106	106	
Dual 3-Input 3-0utput						111		
High-Speed Dual 3-Input 3-0utput						211	211	
Dual 3-Input, plus Inverter			000					
Dual 4-Input			002	4002				
8-Input			078	4078				
Quad 4-Input								E101
Exclusive OR Gates								
Quad 2-Input	86	86	070	86	86	113	113	
Quad 2-Input	386							
Quad, Open-Collector	136							
Quint 2-Input								E107
Exclusive NOR Gates								
Quad, 2-Input Open Drain Output	266		077					
Quad, 2-Input				7266	810			
Quint 2-Input								E107
Complex Gates								
Quad OR/NOR						101	101	
Triple 2-3-2 Input OR/NOR						105	105	
Triple 2-Input Exclusive OR/Exclusive NOR						107	107	
Dual 4-5 Input OR/NOR						109	109	
Dual 4-5 Input OR/NOR							209	
Dual 2-Wide 2-3 Input OR-AND/OR-AND-Invert						117	117	
Dual 2-Wide 3-Input OR-AND						118	118	
4-Wide 4-3-3-3 Input OR-AND Gate						119	119	
OR-AND/OR-AND-INVERT Gate						121	121	
High-Speed Dual 3-Input 3-0utput OR/NOR						212		
Dual 4-Input OR/NOR								
Dual AND-OR-INVERT Gate	51	51	506	51				
3-2-2-3 Input AND-OR-INVERT Gate	54							

Selection By Function (continued)

Function	TTL		CMOS			MECL		
	LS	FAST	STD	High Speed	FACT	10K	10H	ECLinPS
Complex Gates (continued)								
2-Wide and 4-Input AND-OR-INVERT Gate	55							
4-2-2-3 Input AND-OR-INVERT Gate		64						
Triple Gate (Dual 4-Input NAND Gate and 2-Input NOR/ OR Gate or 8-Input AND/NAND Gate)			501					
4-Bit AND/OR Selector (Quad 2-Channel Data Selector or Quad Exclusive NOR Gate)			519					
Dual 5-Input Majority Logic Gate			530					
Hex Gate (Quad Inverter plus 2-Input NOR Gate plus 2-Input NAND Gate)			572					
2-Wide, 2-Input/2-Wide, 3-Input AND-OR Gate				58				
Quint 2-Input AND-OR								E104
Quint 2-Input XOR-OR								E107
Inverters/Buffers (2-State)								
Hex Inverter	04	04	069	04	04			
Hex Inverter, Open-Collector	05				05			
Dual Complementary Pair Plus Inverter			007					
Hex Buffer			050	4050				
Strobed Hex Inverter/Buffer			502					
Hex Buffer With Enable						188	188	
Hex Inverter With Enable						189	189	
Hex Inverter/Buffer			049	4049		195		
Hex Unbuffered Inverter				U04				
9-Bit Buffer								E122
Quad Driver								E112
Translators								
Quad TTL to MECL, ECL Strobe						124	124	
Quad TTL to MECL, ECL Strobe							424	
Quad MECL to TTL						125	125	
Quad PECL to TTL, Single Supply							350	
Quad TTL/NMOS to PECL							351	
Quad CMOS to PECL							352	
Triple MECL to NMOS						177		
TTL or CMOS to CMOS Hex Level Shifter			504					
Quad MST-to-MECL 10,000						190		
Bus-Oriented 3-State Circuits								
Quad Buffer, Low Enable, 3-State	125A	125		125A	125			
Quad Buffer, High Enable, 3-State	126A	126		126A	126			
Octal Bus/Line Driver, Inverting, 3-State	240	240		240	240			

Selection By Function (continued)

Function	TTL		CMOS			MECL		
	LS	FAST	STD	High Speed	FACT	10K	10H	ECLinPS
Bus-Oriented 3-State Circuits (continued)								
Octal Bus/Line Driver, 3-State	241	241		241	241			
Quad Bus Transceiver, Inverting 3-State	242	242		242				
Quad Bus Transceiver, Noninverting, 3-State	243	243						
Octal Driver, Noninverting, 3-State	244	244		244A	244			
Octal Bus Transceiver, Noninverting, 3-State	245	245		245A	245			
Hex Buffer, Common Enable, 3-State	365A	365		365				
Hex Inverter, Common Enable, 3-State	366A	366		366				
Hex Buffer, 4-Bit and 2-Bit, 3-State	367A	367	503	367				
Hex Inverter. 4-Bit and 2-Bit, 3-State	368A	368		368				
Octal Buffer (81LS95), 3-State	795							
Octal Buffer (81LS96), 3-State	796							
Octal Buffer (81LS97), 3-State	797							
Octal Buffer (81LS98), 3-State	798							
Octal Buffer/Line Driver, 3-State	540			540	540			
Octal Buffer/Line Driver, 3-State	541			541	541			
Octal Bus Transceiver, Inverting, 3-State	640	640		640A	640			
Octal Bus Transceiver, Noninverting, 3-State	645							
Octal Transceiver With Storage, 3-State	623	623						
Octal Transceiver/Latch/Multiplexer. Noninverting, 3-State				646	646			
Octal Transceiver/Latch/Multiplexer. Inverting, 3-State				648	648			
Dual Latching Bus Driver						128		
Octal Bidirectional Transceiver With 3-State Outputs					620 623 643			
Octal Bus Transceiver/register Non-Inverting With 3-State Outputs					652			
Octal Registered Transceiver Non-Inverting, With 3-State Outputs		543						
Octal Registered Transceiver Inverting, With 3-State Outputs		544						
Octal Bus Transceiver/Inverting, With 3-State Outputs		620						
Octal Bus Transceiver With Parity Generator Checker, With 3-State Outputs		657A 657B						
Octal Bus Transceiver, Lite Load F245, With 3-State Outputs		1245						

Selection By Function (continued)

Function	TTL		CMOS			MECL		
	LS	FAST	STD	High Speed	FACT	10K	10H	ECLinPS
Bus Drivers (25Ω Outputs)								
Triple 4-3-3 Input						123	123	
Quad Driver/Receiver With 2-1 Output Multiplexer							330	
Dual Driver/Receiver With 4-to-1 Output Multiplexers							332	
Quad Driver/Receiver With Transmit and Receiver Latches							334	
Triple 3-Input Driver With Enable							423	
3-Bit Registered Transceiver								E336
3-Bit Scannable Registered Transceiver								E337
Transceivers								
Octal Bus, Noninverting, Open-Collector	641							
Octal Bus, Inverting, Open-Collector	642							
Quad Futurebus Backplane, 3-State, Open-Collector		3893A						
Quad TTL-ECL 25Ω Bus Transceiver							680	
6-Bit 50Ω ECL-TTL Transceiver							681	
Schmitt Triggers								
Quad 2-Input NAND	132	132	093	132	132			
Dual			583					
Dual 4-Input	13	13						
Hex	14	14	584 106	14	14			
Latches								
4-Bit Bi-Stable Latch With Q and Q	75		042	75				
4-Bit Bi-Stable Latch	77							
Octal Transparent Latch, 3-State, Noninverting	373	373		373	373			
Quad Latch	375					168		
Quad NAND R-S Latch	279		044					
8-Bit Addressable Latch (9334)	259	259	099	259	259			
Dual 4-Bit Addressable Latch	256	256			256			
Octal Transparent Latch, 3-State				573 563	573 563			
Octal Transparent Latch, 3-State, Inverting		533		533	533			
Dual Latch						130	130	
Quad (Negative Transition) Latch						133		
Quad (Positive Transition) Latch						153		
Quint Latch						175	175	
Quad NOR R-S Latch			043					
Dual 4-Bit Latch			508					
8-Bit, Bus-Compatible, 3-State Latches, Internal Counter			597					
8-Bit, Bus-Compatible, 3-State Latches, Binary Address			598					

Selection By Function (continued)

Function	TTL		CMOS			MECL		
	LS	FAST	STD	High Speed	FACT	10K	10H	ECLinPS
Latches (continued)								
8-Bit Addressable Latch With Bidirectional Port			599					
6-Bit D								E150
9-Bit With Parity								E175
3-Bit, 4:1 MUX								E256
3-Bit, 4:1 MUX								E156
5-Bit, 2:1 MUX								E154
6-Bit, 2:1 MUX								E155
Flip-Flops/Registers								
Dual J-K	73A		027	73				
Dual D	74A	74	013	74	74	131	131	
Dual J-K With Set and Reset	76A			76		135	135	
Dual J-K With Preset	109A	109		109	109			
Dual J-K With Clear	107A			107				
Dual J-K Edge-Triggered	112A	112		112				
Dual J-K Edqe-Triggered	113A			113				
Dual J-K Edge-Triggered	114A							
4-Bit D Register, 3-State	173		076	173				
Hex D With Clear	174	174	174	174A	174			
Hex D With Enable	378	378			378			
Quad D With Clear	175	175	175	175				
Octal D With Clear	273			273A	273			
Octal D, 3-State	374	374		374A	374			
Octal D With Enable	377	377			377			
4-Bit D With Enable	379	379						
Hex D						176	176	
Hex D Master-Slave With Reset						186	186	
Octal D, Inverting, 3-State				564	564			
Octal D, 3-State		574		574A	574			
High-Speed Dual Type D Master-Slave						231		
Octal D Flip-Flop, 3-State		534		534A	534			
3-Bit Differential Flip-Flop								E431
4-Bit D Flip-Flop								E131
6-Bit D Register								E151
6-Bit D Register, Differential Data and Clock								E451
6-Bit, 2:1 MUX Register								E167
5-Bit Differential Register								E452
9-Bit Hold Register								E143

Selection By Function (continued)

	TTL		CMOS			MECL		
Function	LS	FAST	STD	High Speed	FACT	10K	10H	ECLinPS
Counters								
Decade	90							
Divide-By-12	92							
4-Bit Binary	93					154		
Decade, Asynchronously Presettable	196							
4-Bit Binary, Asynchronously Presettable	197							
BCD Decade, Asynchronously Reset	160A	160A	160	160	160			
4-Bit Binary, Asynchronous Reset	161A	161A	161	161	161	178	016	
BCD Decade, Synchronous Reset	162A	162A	162	162	162			
4-Bit Binary, Synchronous Reset	163A	163A	163	163	163			
Up/Down Decade, With Clear	192		510					
Up/Down Binary, With Clear	193		516					
Up/Down Decade	190				190			
Up/Down Binary	191		029			136	136	
Decade (Divide By 2 and 5)	290					138		
4-Bit Binary	293							
Dual Decade	390		518	390				
Dual 4-Bit Binary	393		520	393				
Dual Decade	490							
Decade Up/Down, 3-State		568						
Binary Up/Down. 3-State	569	569						
Synchronous 4-Bit Up/Down Binary	669							
Up/Down Decade	168	168						
Up/Down Binary	169	169						
Programmable Decade			522					
Programmable Binary			526					
Seven-Stage Ripple Counter			024	4024				
Decade Counter/Divider			017	4017				
Presenable Divide-by-N			018					
14-Bit Binary Counter/Divider			060	4060				
12-Bit Binary			040	4040	4040			
14-Bit Binary			020	4020	4020			
Octal Counter/Divider			022					
Dual Programmable BCD/Binary			569					
Three-Digit BCD			553					
Real Time 5-Decade			534					
8-Bit Bidirectional Binary Counter, With 3-State Outputs		579 779						

Selection By Function (continued)

	TTL		CMOS			MECL		
Function	LS	FAST	STD	High Speed	FACT	10K	10H	ECLinPS
Counters (continued)								
8-Bit Synchronous Binary Up Counter								E016
6-Bit Universal Counter								E136
8-Bit Ripple Counter								E137
Register File								
4 x 4 Register File, Open-Collector	170							
4 x 4 Register File, 3-State	670							
16 X 4-Bit Register File						145	145	
Shift Register								
8-Bit Serial-In/Parallel-Out Shift Register	164	164	034	164				
8-Bit Parallel-In/Serial-Out Shift Register	165		021	165				
4-Bit Shift Register	95B							
8-Bit Parallel-In/Serial-Out Shift Register	166		014					
4-Bit Shift Register	195A	195		195				
4-Bit Universal Shift Register	194A	194	194	194	194	141	141	
8-Bit Shift/Storage Register, 3-State	299	299	94	299	299			
8-Bit Shift Register With Sign Extend, 3-State	322A							
8-Bit Shift/Storage Register, 3-State	323	323			323			
4-Bit Shift Register, 3-State	395							
1 8-Bit Static Shift Register			006					
1-to-64 Bit Variable Length Shift Register			557					
Dual 64-Bit Static Shift Register			517					
4-Bit Parallel-In/Parallel-Out Shift Register			035					
Dual 4-Bit Static Shift Register			015					
128-Bit Static Shift Register			562					
8-Bit Parallel to Serial S.R. With Input Latches, 3-State				589				
8-Bit Serial to Parallel S.R. 3-State				595				
8-Bit Parallel to Serial S.R. With Input Latches				597				
8-Bit Shift Register								E141
9-Bit Shift Register								E142
8-Bit Scannable Register								E241
3-Bit Scannable Registered Address Driver								E212

Selection By Function (continued)

Function	TTL		CMOS			MECL		
	LS	FAST	STD	High Speed	FACT	10K	10H	ECLinPS
Multiplexers/Data Selectors								
Quad 2-Input Multiplexer, Noninverting	157	157A	519	157A	157	158	158	
Quad 2-Input Multiplexer, Inverting	158	158A		158A	158	159	159	
Quad 2-Input Multiplexer, Noninverting, 3-State	257A	257A		257	257			
Quad 2-Input Multiplexer, Inverting, 3-State	258A	258A			258			
Quad 2-Multiplexer, With Output Register	298					173	173	
Dual 4-Input Multiplexer	153	153	539	153	153	174	174	
Dual 4-Input Multiplexer, 3-State	253	253		253	253			
8-Input Multiplexer	151	151		151	151	164	164	
8-Input Multiplexer, 3-State	251	251	512	251	251			
Dual 4-Input Multiplexer (Inverting LS153)	352	352			352			
Dual 4-Input Multiplexer (3-State LS352)	353	353			353			
QUAD 2-Input Multiplexer With Output Register	398	398						
Quad 2-Input Multiplexer With Output Register	399	399						
Synchronous Address Multiplexer (MC6883)	783							
Dual Multiplexer With Latch and Common Reset						132		
Dual Multiplexer With Latch						134		
Quad Analog Switch/Quad Multiplexer			16	4016 4316				
Quad Analog Switch/Quad Multiplexer			66	4066				
Triple 2-Channel Analog Multiplexer/Demultiplexer			53	4053 4353				
Dual 4-Channel Analog Multiplexer/Demultiplexer			52	4052 4352				
Dual 4-Channel Analog Data Selector			529					
Quad 2-Input Analog Multiplexer/Demultiplexer			551					
8-Channel Analog Multiplexer/Demultiplexer			51	4051 4351				
4-to-16 Decoder				154				
8-Input Multiplexer, 3-State				354				
Qud 2:1 Multiplexer								E157
5-Bit 2:1 Multiplexer								E158
3-Bit 4:1 Multiplexer								E171
2-Bit 8:1 Multiplexer								E163
16:1 Multiplexer								E164
Triple Differential 2:1 Multiplexer								E457
Decoders/Demultiplexers								
Dual 1-of-4 Decoder/Demultiplexer	139	139		139	139			
Dual 1-of-4 Decoder (Low)	155		556			171	171	
Dual 1-of-4 Decoder, Open-Collector	156							

Selection By Function (continued)

	TTL		CMOS			MECL		
Function	LS	FAST	STD	High Speed	FACT	10K	10H	ECLinPS
Decoders/Demultiplexers (continued)								
1-of-10 Decoder	42			42				
1-of-10 Decoder/Driver, Open-Collector	145							
1-of-8 Decoder/Demultiplexer (Low)	138	138		138A	138	161	161	
3-Line to 8-Line Decoder/Demultiplexer	137			137				
1-of-10 Decoder, 3-State		537						
1-of-8 Decoder, 3-State		538						
Dual 1-of-4 Decoder, 3-State		539						
Binary to 1-8 (High)						162	162	
Dual Binary 1-4 (High)			555			172	172	
BCD-to-Decimal/Binary-to-Octal Decoder			028					
4-Bit Latch/4-to-16 Line Decoder (High)			514	4514				
4-Bit Latch/4-to-16 Line Decoder (Low)			515					
1-of-8 Decoder/Demultiplexer With Latched Inputs				237				
Display Decode Drivers								
BCD-to-Seven Segment Decoder/Driver, Open-Collector	47							
BCD-to-Seven Segment Decoder/Driver With Pull-Ups	48		558					
BCD-to-Seven Segment Decoder/Driver, Open-Collector	247							
BCD-to-Seven Segment Decoder/Driver With Pull-Ups	248							
BCD-to-Seven Segment Latch/Decoder/Driver			511	4511				
BCD-to-Seven Segment Latch/Decoder/Driver Ripple Blanking			513					
BCD-to-Seven Segment Latch/Decoder/Driver			543					
BCD-to-Seven Segment Latch/Decoder/Driver Ripple Blanking			544					
BCD-to-Seven Segment Decoder/Driver, High Current			547					
Priority Encoders								
10-Line Decimal to 4-Line Priority Encoder	147							
8-Input to 3-Line Priority Encoder	148	148	532			165	165	
8-Input to 3-Line Priority Encoder	748							
8-Input to 3-Line Priority Encoder, 3-State	348							
8-Input to 3-Line Priority Encoder, 3-State	848							
Multivibrators								
Retriggerable Monostable Multivibrator	122					198		
Dual Retriggerable Monostable Multivibrator	123							
Dual One-Shot (Very Stable)	221							
Dual Precision Retriggerable/Resettable Monostable Multivibrator			538					

Selection By Function (continued)

Function	TTL LS	TTL FAST	CMOS STD	CMOS High Speed	CMOS FACT	MECL 10K	MECL 10H	MECL ECLinPS
Oscillators/Timers								
25-Stage Frequency Divider			521					
Programmable Timer			536					
Programmable Oscillator Timer			541					
Receivers								
Triple Line						114		
Quad Line						115	115	
Triple Line						116	116	
High-Speed Triple Line						216		
Quad Bus						129		
Quad Differential Line								E116
Quint Differential Line								E416
Comparators								
4-Bit Magnitude Comparator	85	85	585	85				
8-Bit Magnitude Comparator		521			521			
8-Bit Magnitude Comparator, 3-State	682							
8-Bit Magnitude Comparator, 3-State	684							
8-Bit Magnitude Comparator	688			688				
5-Bit Magnitude Comparator						166	166	
9-Bit Magnatude Comparator								E166
Arithmetic Operators								
4-Bit Full Adder	83A		008					
4-Bit Full Adder (Rotated LS83A)	283	283						
4-Bit ALU	181	181 381 382	581			181	181	
4-Bit Barrel Shifter		350			350			
Look Ahead Carry Generator		182	582				179	
Dual High-Speed Adder/Subtractor						180	180	
BCD Rate Multiplier			527					
2 x 2 Bit Parallel Binary Multiplier			554					
Triple Serial Adder (Positive Logic)			32					
Triple Serial Adder (Negative Logic)			38					
NBCD Adder			560					
9's Complementer			561					
Parity Generator/Checker								
9-Bit Odd/Even Parity Generator/Checker	280	280		280		170		
12-Bit Parity Generator/Checker			531			160	160	

Selection By Function (continued)

Special Logic Circuits

Timing Solutions

Function	Device	Family
Clock Drivers		
1:9 Differential Clock Driver With Low Skew, Enable, Vbb	MC10/100E111	ECLinPS
1:6 Differential Clock Distribution Chip	MC10/100E211	ECLinPS
Clock Driver, Quad D-Type Flip-Flop, With Matched Propagation Delays	MC74F803	FAST
Clock Driver, Quad D-Type Flip-Flop	MC74F1803	FAST
PECL/TTL-TTL Clock Driver (Single @ 5.0V)	MC10/100H640	MECL 10H
1-9 PECL-TTL Clock Distribution Chip (Single P.S. @ 5.0V)	MC10/100H641	MECL 10H
PECL-TTL Clock Driver (Similar to H640)	MC10/100H642	MECL 10H
1:8 ECL-TTL Clock Dist Chip (Dual Supply, H641)	MC10/100H643	MECL 10H
PECL/TTL-TTL Clock Driver	MC10/100H644	MECL 10H
1:9 TTL-TTL Clock Distribution Chip	MC10/100H645	MECL 10H
Low Skew CMOS Clock Driver	MC88913	SPECIAL LOGIC
Low Skew CMOS Clock Driver With Reset	MC88914	SPECIAL LOGIC
Low Skew CMOS PLL Clock Driver	MC88915*55	SPECIAL LOGIC
Low Skew CMOS PLL Clock Driver	MC88915*70	SPECIAL LOGIC
Programmable Delay Chips		
Programmable Delay Chip (Digitally Selectable 20ps Res)	MC10/100E195	ECLinPS
Programmable Delay Chip (Dig 20ps Anal. < lps)	MC10/100E196	ECLinPS

Phase-Locked Loop

Function	Device	Temperature Range
Prescalers		
÷2 UHF Prescaler, 750 MHz	MC12090	0° to +75°C
÷5, ÷6 Dual Modulus Prescaler, 480 MHz	MC12009	–30° to +85°C
÷8, ÷9 Dual Modulus Prescaler, 550 MHz	MC12011	–30° to +85°C
÷10, ÷11 Dual Modulus Prescaler, 550 MHz	MC12013	–30° to +85°C
÷20, ÷21 Low Power Dual Modulus Prescaler, 225 MHz	MC12019	–40° to +85°C
÷32, ÷33 Low Power Dual Modulus Prescaler, 225 MHz	MC12015	–40° to +85°C
÷32, ÷33, ÷64, ÷65 Low Power Dual Modulus Prescaler, 1.1 GHz, Negative Tigger	MC12028B	–40° to +85°C
÷32, ÷33, ÷64, ÷65 Low Power Dual Modulus Prescaler, 1.1 GHz, Positive Trigger	MC12028A	–40° to +85°C
÷32, ÷33, ÷64, ÷65 Low Power Dual Modulus Prescaler, 2.0 GHz, Negative Trigger	MC12034B	–40° to +85°C
÷32, ÷33, ÷64, ÷65 Low Power Dual Modulus Prescaler, 2.0 GHz, Positive Trigger	MC12034A	–40° to +85°C

Selection By Function (continued)

Special Logic Circuits (continued)

Phase-Locked Loop (continued)

Function	Device	Temperature Range
Prescalers (continued)		
÷40, ÷41 Low Power Dual Modulus Prescaler, 225 MHz	MC12016	–40° to +85°C
÷64 Low Power Prescaler, 1.1 GHz	MC12073	0° to +75°C
÷64 Low Power Prescaler, 225 MHz, Vcc=3.2-5.5v	MC12023	0° to +75°C
÷64, ÷65 Low Power Dual Modulus Prescaler, 520 MHz	MC12025	–40° to +85°C
÷64, ÷65 Low Power Dual Modulus Prescaler, 225 MHz	MC12017	–40° to +85°C
÷64, ÷65, ÷128, ÷129 Dual Modulus Prescaler, 1.1 GHz, Positive Trigger	MC12022A	–40° to +85°C
÷64, ÷65, ÷128, ÷129 Dual Modulus Prescaler, 1.2 GHz, Negative Trigger	MC12022B	–40° to +85°C
÷64, ÷65, ÷128, ÷129 Low Voltage Dual Modulus Prescaler, 1.1 GHz, Negative Trigger	MC12022LVB	–40° to +85°C
÷64, ÷65, ÷128, ÷129 Low Power Dual Modulus Prescaler, 1.1 GHz, Negative Trigger	MC12022SLB	–40° to +85°C
÷64, ÷65, ÷128, ÷129 Low Voltage Dual Modulus Prescaler, 1.1 GHz, Positive Trigger	MC12022LVA	–40° to +85°C
÷64, ÷65, ÷128, ÷129 Low Power Dual Modulus Prescaler, 1.1 GHz, Positive Trigger	MC12022SLA	–40° to +85°C
÷64, ÷65, ÷128, ÷129 Low Power Dual Modulus Prescaler, 1.1 GHz, SLB With X LD on Die	MC12022TSB	–40° to +85°C
÷64, ÷65, ÷128, ÷129 Low Power Dual Modulus Prescaler, 2.0 GHz, Negative Trigger	MC12032B	–40° to +85°C
÷64, ÷65, ÷128, ÷129 Low Power Dual Modulus Prescaler, 2.0 GHz, Positive Trigger	MC12032A	–40° to +85°C
÷64, ÷65, ÷128, ÷129 Low Voltage Dual Modulus Prescaler, 1.1 GHz LVA With X LD on Die	MC12022TVA	–40° to +85°C
÷64, ÷65, ÷128, ÷129 Low Voltage Dual Modulus Prescaler, 1.1 GHz, LVB With X LD on Die	MC12022TVB	–40° to +85°C
÷128, ÷129 Low Power Dual Modulus Prescaler, 520 MHz	MC12018	–40° to +85°C
÷256 Low Power Prescaler, 1.1 GHz	MC12074	0° to +75°C
÷256 Low Power Prescaler, Enhanced 12074, 1.3 GHz	MC12076	0° to +75°C
÷256 Low Power Prescaler, Enhanced 12074, 1.3 GHz	MC12078	0° to +75°C
Oscillator		
Crystal Oscillator	MC12061	0° to +75°C
Mixer		
Analog Mixer	MC12002	–30° to +85°C
Detectors		
Phase-Frequency Detector	MC4044	0° to +75°C
Phase-Frequency Detector	MC4344	–55° to +125°C
Phase-Frequency Detector	MC12040	0° to +75°C

Selection By Function (continued)

Special Logic Circuits (continued)

Phase-Locked Loop (continued)

Function	Device	Temperature Range
Counters		
Dual Voltage-Controlled Multivibrator	MC4024	0° to +75°C
Dual Voltage-controlled Multivibrator	MC4324	–55° to +125°C
Programmable Modulo-N Counters (N=0-9)	MC4016	0° to +75°C
Programmable Modulo-N Counters (N=0-9)	MC4018	0° to +75°C
Programmable Modulo-N Counters (N=0-9)	MC4316	–55° to +125°C
Counter Control Logic	MC12014	0° to +75°C

Translators

Function	Device	Family
9-Bit ECL-TTL Translator	MC10H601 MC100H601	MECL 10H
9-Bit Latch/ECL-TTL Translator	MC10H603 MC100H603	MECL 10H
9-Bit Latch/TTL-ECL Translator	MC10H602 MC100H602	MECL 10H
9-Bit TTL-ECL Translator	MC10H600 MC100H600	MECL 10H
PECL-to-TTL Translator (Single P.S. @+ 5.0V)	MC10H350	MECL 10H
Hex TTL OR CMOS to CMOS Hex Level Shifter	MC14504B	MGCMOS
Quad CMOS-to-PECL Translator (Single P.S. @+ 5.0V)	MC10H352	MECL 10H
Quad MECL-to-TTL Translator	MC10125	MECL 10K
Quad MST-to-MECL 10K Translator	MC10190	MECL 10K
Quad TTL/NMOS-to-PECL Translator (Single P.S. @+ 5.0V)	MC10H351	MECL 10H
Quad TTL-to-ECL Translator (ECL Strobe)	MC10H424	MECL 10H
Quad TTL-to-MECL Translator	MC10124	MECL 10K
Triple MECL-to-NMOS Translator	MC10177	MECL 10K

Selection By Function (continued)

Special Logic Circuits (continued)

CBM

Function	Device	Family
Carrier Band Modem	MC68194	

SCSI Bus Terminator

Function	Device	Family
9-Bit Switchable SCSI Passive Bus Terminator (220Ω to 330Ω)	MCCS142233	

Memory Support

Function	Device	Family
Dynamic Memory Controller (DMC) for 256K DRAMs	MC74F2968A	
Dynamic Memory Controller, 1 Megabit (DMC)	MC74F29368	
Error Detection and Correction Circuit	MC74F2960	
Error Detection and Correction Circuit	MC74F2960A	
Enhanced Memory Timing Controller	MC74F2969	
Memory Timing Controller	MC74F2970	
4-Bit Error Correction Multiple Bias Buffers, Inverting	MC74F2961A	
4-Bit Error Correction Multiple Bias Buffers, Non-Inverting	MC74F2962A	
Quad Dual Output ECL-TTL DRAM Driver With Latch	MC10/100H660	

Numeric Listings

TTL

Since its introduction, TTL has become the most popular form of digital logic. It has evolved from the original gold-doped saturated 7400 logic, to Schottky-Clamped logic, and finally to the modern advanced families of TTL logic. The popularity of these TTL families stems from their ease of use, low cost, medium-to-high speed operation, and good output drive capability.

Motorola offers two modern TTL logic families — LS and FAST™. They are pin and functionally compatible and can easily be combined in a system to achieve maximum performance at minimum cost.

LS (Low Power Schottky) is currently the more popular and commands by far the largest share of the total TTL logic market. It is low-cost and provides moderate performance at low power.

FAST, the state-of-the-art, high-performance TTL family, is growing rapidly and gaining a significant share of the total TTL logic market. FAST offers a 20–30 percent improvement in performance over the older Standard Schottky family (74S) with a 75–80 percent reduction in power. When compared with the Advanced Schottky family (74AS), FAST offers nearly equal performance at a 25–50 percent savings in power.

FAST is manufactured on Motorola's MOSAIC (oxide-isolated) process. This process provides FAST with inherent speed/power advantages over the older junction-isolated 74S and 74LS families. This allows the FAST family to be designed and specified with improved noise margins, reduced input currents, and superior line driving capabilities in comparison to these earlier families. Additionally, FAST designs incorporate power-down circuitry on all three-state outputs, and buffered outputs on all storage devices.

Two further advantages of FAST are the load specifications and power supply specifications. FAST ac characteristics are specified at a heavier capacitive load than the earlier families (50 pF versus 15 pF) to more accurately reflect actual in-circuit performance. Motorola's DC and AC characteristics for FAST are specified over a full 10% supply voltage range — a significant improvement over the industry standard specifications for the earlier families (5% for DC, 0% for AC).

These design and specification improvements offered by the Motorola FAST family provide the user with better system performance, enhanced design flexibility, and more reliable system operation.

TTL Family Comparisons

General Characteristics for Schottky TTL Logic (ALL MAXIMUM RATINGS)

Characteristic		Symbol	LS		FAST		Unit
			54LSxxx	74LSxxx	54Fxxx	74Fxxx	
Operating Voltage Range		V_{CC}	5 ± 10%	5 ± 5%	5 ± 10%	5 ± 10%	Vdc
Operating Temperature Range		T_A	–55 to 125	0 to 70	–55 to 125	0 to 70	°C
Input Current		I_{IN} I_{IH}	20	20	20	20	µA
		I_{IN} I_{IL}	–400	–400	–600	–600	µA
Output Drive	Standard Output	I_{OH}	–0.4	–0.4	–1.0	–1.0	mA
		I_{OL}	4.0	8.0	20	20	mA
		I_{SC}	–20 to –100	–20 to –100	–60 to –150	–60 to –150	mA
	Buffer Output	I_{OH}	–12	–15	–12	–15	mA
		I_{OL}	12	24	48	64	mA
		I_{SC}	–40 to –225	–40 to –225	–100 to –225	–100 to –225	mA

Speed/Power Characteristics for Schottky TTL Logic[1] (ALL TYPICAL RATINGS)

Characteristic	Symbol	LS	FAST	Unit
Quiescent Supply Current/Gate	I_G	0.4	1.1	mA
Power/Gate (Quiescent)	P_G	2.0	5.5	mW
Propagation Delay	t_p	9.0	3.7	ns

Characteristic	Symbol	LS	FAST	Unit
Speed Power Product	—	18	19.2	pJ
Clock Frequency (D-F/F)	f_{max}	33	125	MHz
Clock Frequency (Counter)	f_{max}	40	125	MHz

NOTES: [1] Specifications are shown for the following conditions: a) V_{CC} = 5.0 Vdc; b) T_A = 25°C and c) C_L = 50 pF for FAST; 15 pF for LS.

LS - Low Power Schottky

Numeric Listing

SN54LS/ SN74LS	Function	Pins	DIP	SM
00	Quad 2-Input NAND Gate	14	N,J	D
01	Quad 2-Input NAND Gate	14	N,J	D
02	Quad 2-Input NOR Gate	14	N,J	D
03	Quad 2-Input NAND Gate	14	N,J	D
04	Hex Inverter	14	N,J	D
05	Hex Inverter	14	N,J	D
08	Quad 2-Input AND Gate	14	N,J	D
09	Quad 2-Input AND Gate	14	N,J	D
10	Triple 3-Input NAND Gate	14	N,J	D
11	Triple 3-Input AND Gate	14	N,J	D
12	Triple 3-Input NAND Gate	14	N,J	D
13	Dual 4-Input NAND Schmitt Trigger	14	N,J	D
14	Hex Inverter Schmitt Trigger	14	N,J	D
15	Triple 3-Input AND Gate	14	N,J	D
20	Dual 4-Input NAND Gate	14	N,J	D
21	Dual 4-Input AND Gate	14	N,J	D
22	Dual 4-Input NAND Gate	14	N,J	D
26	Quad 2-Input NAND Buffer	14	N,J	D
27	Triple 3-Input NOR Gate	14	N,J	D
28	Quad 2-Input NOR Buffer	14	N,J	D
30	8-Input NAND Gate	14	N,J	D
32	Quad 2-Input OR Gate	14	N,J	D
33	Quad 2-Input NOR Buffer	14	N,J	D
37	Quad 2-Input NAND Buffer	14	N,J	D
38	Quad 2-Input NAND Buffer Open-Collector	14	N,J	D
40	Dual 4-Input NAND Buffer	14	N,J	D
42	One-of-Ten Decoder	16	N,J	D
47	Binary-Coded-Decimal to 7 Segment Decoder/Driver	16	N,J	D
48	Binary-Coded-Decimal to 7 Segment Decoder	16	N,J	D
51	Dual 2 Wide 2-Input/3-Input AND/OR Invert Gate	14	N,J	D
54	3-2-2-3-Input AND/OR Invert Gate	14	N,J	D
55	2-Wide, 4-Input AND/OR Invert Gate	14	N,J	D
73A	Dual J-K Negative Edge-Triggered Flip-Flop	14	N,J	D
74A	Dual D-Type Positive Edge-Triggered Flip-Flop	16	N,J	D
75	4-Bit D Latch	16	N,J	D

* Available in 74F only

LS - Low Power Schottky

Numeric Listing (continued)

SN54LS/ SN74LS	Function	Pins	DIP	SM
76A	Dual J-K Flip-Flop With Set and Clear	16	N,J	D
77	4-Bit D Latch	14	N,J	D
83A	4-Bit Binary Full Adder With Fast Carry	14	N,J	D
85	4-Bit Magnitude Comparator	16	N,J	D
86	Quad Exclusive OR Gate	14	N,J	D
90	Decade Counter	14	N,J	D
92	Divide By 12 Counter	14	N,J	D
93	4-Bit Binary Counter	14	N,J	D
95B	4-Bit Shift Register	14	N,J	D
107A	Dual J-K Flip-Flop	14	N,J	D
109A	Dual J-K Positive Edge-Triggered Flip-Flop	16	N,J	D
112A	Dual J-K Negative Edge-Triggered Flip-Flop	16	N,J	D
113A	Dual J-K Negative Edge-Triggered Flip-Flop	14	N,J	D
114A	Dual J-K Negative Edge-Triggered Flip-Flop	14	N,J	D
122	Retriggerable Monostable Multivibrators	14	N,J	D
123	Retriggerable Monostable Multivibrators	14	N,J	D
125A	Quad 3-State Buffers	14	N,J	D
126A	Quad 3-State Buffers	14	N,J	D
132	Quad 2-Input Schmitt Trigger NAND Gate	14	N,J	D
133	13-Input NAND Gate	16	N,J	D
136*	Quad 2-Input Exclusive OR Gate	14	N,J	D
137	3-Line to 8-Line Decoders/Demultiplexers With Address Latches	16	N,J	D
138	1-of-8 Decoder/Demultiplexer	16	N,J	D
139	Dual 1-of-4 Decoder/Demultiplexer	16	N,J	D
145	1-of-10 Decoder/Driver Open-Collector	16	N,J	D
147	10-Line to 4-Line Priority Encoder	16	N,J	D
148	8-Line to 3-Line Priority Encoder	16	N,J	D
151	8-Input Multiplexer	16	N,J	D
153	Dual 4-Input Multiplexer	16	N,J	D
155	Dual 1-of-4 Decoder	16	N,J	D
156	Dual 1-of-4 Decoder Open-Collector	16	N,J	D
157	Quad 2-Input Multiplexer	16	N,J	D
158	Quad 2-Input Multiplexer	16	N,J	D
160A	4-Bit BCD Decade Counter, Asynchronous Reset	16	N,J	D
161A	4-Bit Binary Counter, Synchronous Reset	16	N,J	D

* Available in 74F only

LS - Low Power Schottky

Numeric Listing (continued)

SN54LS/ SN74LS	Function	Pins	DIP	SM
162A	4-Bit BCD Decade Counter, Asynchronous Reset	16	N,J	D
163A	4-Bit Binary Counter, Synchronous Reset	16	N,J	D
164	8-Bit Serial-In Parallel-Out Shift Register	14	N,J	D
165	8-Bit Parallel-to-Serial Converter	16	N,J	D
166	8-Bit Shift Registers	16	N,J	D
168	BCD Decade Synchronous Bidirectional Counter	16	N,J	D
169	Modulo 16 Binary Synchronous Bidirectional Counter	16	N,J	D
170	4 X 4 Register File Open Collector	16	N,J	D
173A	4-Bit D-Type Register With 3-State Outputs	16	N,J	D
174	Hex D Flip-Flop	16	N,J	D
175	Quad D Flip-Flop	16	N,J	D
181	4-Bit Arithmetic Logic Unit	24	N,J	DW
190	Presettable BCD/Decade Up/Down Counter	16	N,J	D
191	Presettable 4-Bit Binary Up/Down Counter	16	N,J	D
192	Presettable BCD/Decade Up/Down Counter	16	N,J	D
193	Presettable 4-Bit Binary Up/Down Counter	16	N,J	D
194A	4-Bit Bidirectional Universal Shift Register	16	N,J	D
195A	Universal 4-Bit Shift Register	16	N,J	D
196	4-Stage Presettable Ripple Counters	14	N,J	D
197	4-Stage Presettable Ripple Counters	14	N,J	D
221	Dual Monstable Multivibrators With Schmitt Trigger Inputs	16	N,J	D
240	Octal Buffer/Line Driver With 3-State	20	N,J	DW
241	Octal Buffer/Line Driver With 3-State	20	N,J	DW
242	Quad Bus Transceiver/Inverting With 3-State	14	N,J	D
243	Quad Bus Transceiver/Noninverting With 3-State	14	N,J	D
244	Octal Buffer/Line Driver With 3-State	20	N,J	DW
245	Octal Bus Transceiver	20	N,J	DW
247	BCD-to-Seven-Segment Decoders/Drivers	16	N,J	D
248	BCD-to-Seven-Segment Decoders/Drivers	16	N,J	D
249	BCD-to-Seven-Segment Decoders/Drivers	16	N,J	D
251*	8-Input Multiplexer With 3-State	16	N,J	D
253	Dual 4-Input Multiplexer With 3-State	16	N,J	D
256	Dual 4-Bit Addressable Latch	16	N,J	D
257A	Quad 2-Input Multiplexer With 3-State	16	N,J	D
258A	Quad 2-Input Multiplexer, Inverting, With 3-State	16	N,J	D

* Available in 74F only

LS - Low Power Schottky

Numeric Listing (continued)

SN54LS/ SN74LS	Function	Pins	DIP	SM
259	8-Bit Addressable Latch	16	N,J	D
260	Dual 5-Input NOR Gate	14	N,J	D
266	Quad 2-Input Exclusive NOR Gate	14	N,J	D
273	Octal D Flip-Flop With Clear	20	N,J	DW
279	Quad Set-Reset Latch	16	N,J	D
280	9-Bit Odd/Even Parity Generator/Checker	14	N,J	D
283	4-Bit Binary Full Adder With Fast Carry	16	N,J	D
290	Decade Counter	14	N,J	D
293	4-Bit Binary Counter	14	N,J	D
298	Quad 2-Input Multiplexer With Storage	16	N,J	D
299	8-Bit Shift/Storage Register With 3-State	20	N,J	DW
322A	8-Bit Shift Registers With Sign Extend	20	N,J	DW
323	8-Bit Shift/Storage Register With 3-State	20	N,J	DW
348	8-Input Priority Encoder	16	N,J	D
352	Dual 4-Input Multiplexer	16	N,J	D
353	Dual 4-Input Multiplexer With 3-State	16	N,J	D
365A	Hex Buffer Gated Enable Non-Inverting With 3-State	16	N,J	D
366A	Hex Buffer Gated Enable Inverting With 3-State	16	N,J	D
367A	Hex Buffer 4/2-Bit/Non-Inverting With 3-State	16	N,J	D
368A	Hex Buffer 4/2-Bit/Inverting With 3-State	16	N,J	D
373	Octal Transparent Latch With 3-State	20	N,J	DW
374	Octal D-Type Flip-Flop With 3-State	20	N,J	DW
375	4-Bit D Latch	16	N,J	D
377	Octal D Flip-Flop With Enable, Non-Inverting	20	N,J	DW
378	Hex D Flip-Flop With Enable	16	N,J	D
379	4-Bit D Flip-Flop With Enable	16	N,J	D
386	Quad 2-Input Exclusive OR Gate	14	N,J	D
390	Dual Decade Counter	16	N,J	D
393	Dual 4-Stage Binary Counter	16	N,J	D
395*	4-Bit Shift Register With 3-State Outputs	16	N,J	D
398	Quad 2-Port Register	20	N,J	DW
399	Quad 2-Port Register	20	N,J	DW
490	Dual Decade Counter	16	N,J	D
540	Octal Buffer/Line Driver With 3-State Outputs	20	N,J	DW
541	Octal Buffer/Line Driver With 3-State Outputs	20	N,J	DW

* Available in 74F only

LS - Low Power Schottky

Numeric Listing (continued)

SN54LS/ SN74LS	Function	Pins	DIP	SM
569	4-Bit Up/Down Counter With 3-State Outputs	20	N,J	DW
623	Octal Bus Transceiver	20	N,J	DW
640	Octal Bus Transceiver/Inverting With 3-State Outputs	20	N,J	DW
641	Octal Bus Transceiver/Noninverting With Open Collector	20	N,J	DW
642	Octal Bus Transceiver/Inverting With Open Collector	20	N,J	DW
645	Octal Bus Transceiver/Noninverting With 3-State Outputs	20	N,J	DW
669	Synchronous 4-Bit Up/Down Counter	16	N,J	D
670	4 X 4 Register File With 3-State Outputs	16	N,J	D
682	8-Bit Magnitude Comparators	20	N,J	DW
684	8-Bit Magnitude Comparators	20	N,J	DW
688	8-Bit Magnitude Comparators	20	N,J	DW
748	8-Line To 3-Line Priority Encoder	16	N,J	
783*	Synchronous Address Multiplexer (MC6883)	40	N,J	
785*	Synchronous Address Multiplexer (16 X 4 DRAM Support)	40	N,J	
795	Octal Buffer (81LS95), 3-State	20	N,J	DW
796	Octal Buffer (81LS96), 3-State	20	N,J	DW
797	Octal Buffer (81LS97), 3-State	20	N,J	DW
798	Octal Buffer (81LS98), 3-State	20	N,J	DW
848	8-Input Priority Encoder (Glitchless)	16	N,J	

* Available in 74F only

FAST

Numeric Listing

MC54F/ MC74F	Function	Pins	DIP	SM
00	Quad 2-Input NAND Gate	14	N,J	D
02	Quad 2-Input NOR Gate	14	N,J	D
04	Hex Inverter	14	N,J	D
08	Quad 2-Input AND Gate	14	N,J	D
10	Triple 3-Input NAND Gate	14	N,J	D
11	Triple 3-Input AND Gate	14	N,J	D
13	Dual 4-Input NAND Schmitt Trigger	14	N,J	D
14	Hex Inverter Schmitt Trigger	14	N,J	D
20	Dual 4-Input NAND Gate	14	N,J	D
21	Dual 4-Input AND Gate	14	N,J	D
32	Quad 2-Input OR Gate	14	N,J	D
37	Quad 2-Input NAND Buffer	14	N,J	D
38*	Quad 2-Input NAND Buffer Open-Collector	14	N,J	D
40*	Dual 4-Input NAND Buffer	14	N,J	D
51*	Dual 2-Wide 2-Input, 2-Wide 3-Input AND-OR-Invert Gate	14	N,J	D
64	4-2-3-2 Input AND/OR Invert Gate	14	N,J	D
74	Dual D-Type Positive Edge-Triggered Flip-Flop	14	N,J	D
85	4-Bit Magnitude Comparator	16	N,J	D
86	Quad 2-Input Exclusive OR Gate	14	N,J	D
109	Dual J-K (Bar) Positive Edge-Triggered Flip-Flop	16	N,J	D
112*	Dual J-K Negative Edge-Triggered Flip-Flop	16	N,J	D
125	Quad Buffer, 3-State	14	N,J	D
126	Quad Buffer, 3-State	14	N,J	D
132	Quad 2-Input NAND Schmitt Trigger	14	N,J	D
138	1-of-8 Decoder/Demultiplexer	16	N,J	D
139	Dual 1-of-4 Decoder/Demultiplexer	16	N,J	D
148	8-Line to 3-Line Priority Encoder	16	N,J	D
151	8-Input Multiplexer	16	N,J	D
153	Dual 4-Input Multiplexer	16	N,J	D
157A*	Quad 2-Input Multiplexer	16	N,J	D
158A*	Quad 2-Input Multiplexer	16	N,J	D
160A*	BCD Decade Counter, Synchronous Presettable	16	N,J	D
161A*	Binary Counter, Synchronous Presettable, 4-Bit	16	N,J	D
162A*	BCD Decade Counter, Synchronous Presettable	16	N,J	D
163A*	Binary Counter, Synchronous Presettable, 4-Bit	16	N,J	D

* Available in 74F only

FAST
Numeric Listing (continued)

MC54F/ MC74F	Function	Pins	DIP	SM
164	8-Bit Serial In-Serial Out Shift Register	14	N,J	D
168	4-Stage Synchronous Bidirectional Counter	16	N,J	D
169	4-Stage Synchronous Bidirectional Counter	16	N,J	D
174	Hex D Flip-Flop With Master Reset	16	N,J	D
175	Quad D Flip-Flop	16	N,J	D
181	4-Bit Arithmetic Logic Unit	24	N,J	D
182	Carry Lookahead Generator	16	N,J	D
194*	4-Bit Bidirectional Universal Shift Register	16	N,J	D
195*	4-Bit Shift Register	16	N,J	D
240	Octal Buffer/Line Driver With 3-State Outputs	20	N,J	DW
241	Octal Buffer/Line Driver With 3-State Outputs	20	N,J	DW
242	Quad Bus Transceivers With 3-State Outputs	14	N,J	D
243	Quad Bus Transceivers With 3-State Outputs	14	N,J	D
244	Octal Buffer/Line Driver With 3-State Outputs	20	N,J	DW
245	Octal Bidirectional Transceiver With 3-State Outputs	20	N,J	DW
251	8-Input Multiplexer, With 3-State Outputs	16	N,J	D
253	Dual 4-Input Multiplexer, With 3-State Outputs	16	N,J	D
256	Dual 4-Bit Addressable Latch	16	N,J	D
257A*	Quad 2-Input Multiplexer, With 3-State Outputs	16	N,J	D
258A*	Quad 2-Input Multiplexer, With 3-State Outputs	16	N,J	D
259	8-Bit Addressable Latch	16	N,J	D
269	8-Bit Bidirectional Binary Counter	24	N,J	DW
280	9-Bit Parity Generator/Checker	14	N,J	D
283	4-Bit Binary Full Adder	16	N,J	D
299*	8-Bit Shift/Storage Register	20	N,J	DW
323*	8-Bit Universal Shift/Storage Register	20	N,J	DW
350	4-Bit Shifter, With 3-State Outputs	16	N,J	D
352	Dual 4-Input Multiplexer	16	N,J	D
353	Dual 4-Input Multiplexer, With 3-State Outputs	20	N,J	D
365	Hex Buffer/Driver Gated Enable Non-Inverting, With 3-State Outputs	16	N,J	D
366	Hex Buffer/Driver Gated Enable Non-Inverting, With 3-State Outputs	16	N,J	D
367	Hex Buffer/Driver, 4+2-Bit, Non-Inverting, 3-State	16	N,J	D
368	Hex Buffer/Driver, 4+2-Bit, Inverting, 3-State	16	N,J	D
373	Octal Transparent Latch, With 3-State Outputs	20	N,J	DW
374	Octal D Flip-Flop, With 3-State Outputs	20	N,J	DW

* Available in 74F only

FAST

Numeric Listing (continued)

MC54F/ MC74F	Function	Pins	DIP	SM
377*	Octal D Flip-Flop With Enable	20	N,J	DW
378	Hex Parallel D Register With Enable	16	N,J	D
379	Quad Parallel Register With Enable	16	N,J	D
381	4-Bit Arithmetic Logic Unit	20	N,J	DW
382	4-Bit Arithmetic Logic Unit	20	N,J	DW
398	Quad 2-Port Register	20	N,J	DW
399	Quad 2-Port Register	16	N,J	D
521	8-Bit Identity Comparator	20	N,J	DW
533	Octal Transparent Latch, With 3-State Outputs	20	N,J	DW
534	Octal D-Type Flip-Flop, With 3-State Outputs	20	N,J	DW
537	1-of-10 Decoder, With 3-State Outputs	20	N,J	DW
538	1-of-8 Decoder, With 3-State Outputs	20	N,J	DW
539	1-of-4 Decoder, With 3-State Outputs	20	N,J	DW
543*	Octal Registered Transceiver Non-Inverting, With 3-State Outputs	24	N,J	D
544*	Octal Registered Transceiver Inverting, With 3-State Outputs	24	N	DW
568	4-Bit Bidirectional Counters, With 3-State Outputs	20	N,J	DW
569	4-Bit Bidirectional Counters, With 3-State Outputs	20	N,J	DW
574	Octal D Flip-Flop 3-State/Broadside Pinout, F374	20	N,J	DW
579	8-Bit Bidirectional Binary Counter, With 3-State Outputs	20	N,J	DW
620*	Octal Bus Transceiver/Inverting, With 3-State Outputs	20	N,J	DW
623*	Octal Bus Transceiver, With 3-State Outputs	20	N,J	DW
640	Octal Bus Transceiver/Inverting, With 3-State Outputs	20		
657A	Octal Bus Transceiver With Parity Gen Chk, With 3-State Outputs	24	N,J	DW
657B	Octal Bus Transceiver With Parity Gen Chk, With 3-State Outputs	24	N,J	DW
779	8-Bit Bidirectional Binary Counter, With 3-State Outputs	16	N,J	DW
803	Clock Driver, Quad D-Type Flip-Flop, With Matched Propagation Delays	14	N	D
827	10-Bit Buffer/Line Driver (Non-Inverting), With 3-State Outputs	24	N,J	
828	10-Bit Buffer/Line Driver (Inverting), With 3-State Outputs	24	N,J	
1245*	Octal Bus Transceiver, Lite Load F245, With 3-State Outputs	20	N	DW
1803*	Clock Driver (Quad D-Type Flip-Flop)	14	N	DW
3893A*	Quad Futurebus Backplane Transceiver, With 3-State Outputs and Open Collector	20		FN

* Available in 74F only

MECL

Motorola's Emitter Coupled Logic (MECL) is a nonsaturated form of digital logic which eliminates transistor storage time as a speed limiting characteristic, permitting very high speed operation.

Motorola offers four versions of MECL: MECL 10K, MECL 10H, MECL III and the recently introduced ECLinPS (ECL in picoseconds) family.

The *MECL 10K* series has become the industry standard for high-speed applications. In order to make the circuits comparatively easy to use, edge speed was slowed to 2.0 ns while the important propagation delay was held to 2.0 ns. The slow edge speed permits use of wire-wrap and standard printed circuit lines, however, the circuits are specified to drive transmission lines for optimum performance.

The newer *MECL 10H* family features 100% improvement in propagation delay and clock speeds while maintaining power supply current equal to MECL 10K. MECL 10H is voltage compensated which allows guaranteed DC and switching parameters over a ±5% power supply range. MECL 10H is compatible with MECL 10K, MECL III, and ECLinPS, a key element in allowing users to enhance existing systems by increasing the speed in critical timing areas.

ECLinPS is the latest ECL family to enter the competition and represents a major advance in high-speed logic capabilities. With a gate propagation delay of only 0.33 ns and a flip-flop toggle frequency at least 1100 MHz it literally eclipses the performance of the earlier ECL lines while maintaining signal and power-supply compatibility with MECL 10H/100H. ECLinPS functions include both 10E (10H Equivalent) and full voltage and temperature compensated 100E (100H Equivalent) versions.

MECL III has 1.0 ns gate propagation delays and greater than 500 MHz flip-flop toggle rates. MECL III's popularity is in high-speed test and communications equipment.

Speed/power comparisons for Motorola ECL families are as follows:

Speed/Power Characteristics for MECL (ALL TYPICAL RATINGS)

Characteristic	Symbol	MECL 10K		MECL/10H	ECLinPS	MECL III	Unit
		MC101xx	MC102xx	MC10H1xx	MC10E/100E	MC16xx	
Quiescent Supply Current/Gate	I_G	5.0	5.0	5.0	5.0	10	mA
Power/Gate (Quiescent)	P_G	26	26	26	26	54	mW
Propagation Delay	t_p	2.0	1.5	1.0	0.33	1.1	ns
Rise/Fall Time	t_r, t_f	2.0	1.5	1.0	1.0	0.4	ns
Speed Power Product	—	52	39	26	8.6	59	pJ
Clock Frequency (D-F/F)	f_{max}	125	200	250	1100	550	MHz

MECL 10K

Numeric Listing

MC10	Function	Pins	DIP	SM*
100	Quad 2-Input NOR Gate With Strobe	16	P,L	FN
101	Quad OR/NOR Gate	16	P,L	FN
102	Quad 2-Input NOR Gate	16	P,L	FN
103	Quad 2-Input OR Gate	16	P,L	FN
104	Quad 2-Input AND Gate	16	P,L	FN
105	Triple 2-3-2 Input OR/NOR Gate	16	P,L	FN
106	Triple 4-3-3 Input NOR Gate	16	P,L	FN
107	Triple 2-Input Exclusive Or/Exclusive NOR Gate	16	P,L	FN
109	Dual 4-5 Input OR/NOR Gate	16	P,L	FN
110	Dual 3-Input 3-Output OR Gate	16	P,L	FN
111	Dual 3-Input 3-Output NOR Gate	16	P,L	FN
113	Quad Exclusive OR Gate	16	P,L	FN
114	Triple Line Receiver	16	P,L	FN
115	Quad Line Receiver	16	P,L	FN
116	Triple Line Receiver	16	P,L	FN
117	Dual 2-Wide 2-3-Input OR-AND/OR-AND-Invert Gate	16	P,L	FN
118	Dual 2-Wide 3-Input OR-AND Gate	16	P,L	FN
119	4-Wide 4-3-3-3 Input OR-AND Gate	16	P,L	FN
121	4-Wide OR-AND/OR-AND-Invert Gate	16	P,L	FN
123	Triple 4-3-3 Input Bus Driver (25Ω)	16	P,L	FN
124	Quad TTL-to-MECL Translator	16	P,L	FN
125	Quad MECL-to-TTL Translator	16	P,L	FN
128	Bus Driver	16	L	
129	Quad Bus Receiver	16	L	
130	Dual Latch	16	P,L	FN
131	Dual D-Type Master-Slave Flip-Flop	16	P,L	FN
132	Dual Multiplexer With Latch and Common Reset	16	P,L	
133	Quad Latch	16	P,L	FN
134	Dual Multiplexer With Latch	16	P,L	FN
135	Dual J-K Master-Slave Flip-Flop	16	P,L	FN
136	Universal Hexadecimal Counter	16	P,L	FN
138	Bi-Quinary Counter	16	P,L	FN
141	4-Bit Universal Shift Register	16	P,L	FN
153	Quad Latch	16	P,L	FN
154	Binary Counter	16	P,L	

* ≤ 20-Pin DIP = 20-Pin PLCC; > 20-Pin DIP = 28-Pin PLCC; See Conversion Table on Page 3.1-61

MECL 10K

Numeric Listing (continued)

MC10	Function	Pins	DIP	SM*
158	Quad 2-Input Multiplexer (Non-Inverting)	16	P,L	FN
159	Quad 2-Input Multiplexer (Inverting)	16	P,L	FN
160	12-Bit Parity Generator/Checker	16	P,L	FN
161	Binary to 1-8 Decoder, (Low)	16	P,L	FN
162	Binary to 1-8 Decoder, (High)	16	P,L	FN
163	Error Detection-Correction Circuit (IBM Code)	16	P,L	
164	8-Line Multiplexer	16	P,L	FN
165	8-Input Priority Encoder	16	P,L	FN
166	5-Bit Magnitude Comparator	16	P,L	FN
168	Quad Latch	16	P,L	FN
170	9 + 2-Bit Parity Generator-Checker	16	P,L	FN
171	Binary to 1-4 Decoder (Low)	16	P,L	FN
172	Dual Binary to 1-4 Decoder (High)	16	P,L	FN
173	Quad 2-Input Multiplexer/Latch	16	P,L	FN
174	Dual 4-to-1 Multiplexer	16	P,L	FN
175	Quint Latch	16	P,L	FN
176	Hex D Master-Slave Flip-Flop	16	P,L	FN
177	Triple MECL-to-NMOS Translator	16	L	
178	Binary Counter	16	P,L	FN
180	Dual 2-Bit Adder/Subtractor	16	P,L	
181	4-Bit Arithmetic Logic Unit/Function Generator	24	P,L	
186	Hex D Master Slave Flip-Flop With Reset	16	P,L	FN
188	Hex Buffer With Enable	16	P,L	FN
189	Hex Inverter With Enable	16	P,L	FN
190	Quad MST-to-MECL 10K Translator	16	P,L	FN
192	Quad Bus Driver	16	P,L	FN
193	Error Detection-Correction Circuit (Motorola Code)	16	P,L	
195	Hex Inverter/Buffer	16	P,L	FN
197	Hex AND Gate	16	P,L	FN
198	Monostable Multivibrator	16	P,L	FN
210	Dual 3-Input, 3-Output OR Gate	16	P,L	FN
211	Dual 3-Input, 3-Output NOR Gate	16	P,L	FN
212	High Speed Dual 3-Input 3-Output OR/NOR Gate	16	P,L	FN
216	High Speed Triple Line Receiver	16	P,L	FN
231	High Speed Dual D Master-Slave Flip-Flop	16	P,L	FN
804	ECL/TTL Inverting Bidirectional Transceivers With Latch (4-Bit)	16	P,L	
805	ECL/TTL Inverting Bidirectional Transceivers With Latch (5-Bit)	20	P,L	

* ≤ 20-Pin DIP = 20-Pin PLCC; > 20-Pin DIP = 28-Pin PLCC; See Conversion Table on Page 3.1-61

MECL 10H

Numeric Listing

MC10H	Function	Pins	DIP	SM*
016	4-Bit Binary Counter	16	P,L	FN
100	Quad 2-Input NOR Gate With Strobe	16	P,L	FN
101	Quad OR/NOR Gate	16	P,L	FN
102	Quad 2-Input NOR Gate	16	P,L	FN
103	Quad 2-Input OR Gate	16	P,L	FN
104	Quad 2-Input AND Gate	16	P,L	FN
105	Triple 2-3-2 Input OR/NOR Gate	16	P,L	FN
106	Triple 4-3-3 Input NOR Gate	16	P,L	FN
107	Triple 2-Input Exclusive OR/Exclusive NOR Gate	16	P,L	FN
109	Dual 4-5 Input OR/NOR Gate	16	P,L	FN
113	Quad Exclusive OR Gate	16	P,L	FN
115	Quad Line Receiver	16	P,L	FN
116	Triple Line Receiver	16	P,L	FN
117	Dual 2-Wide 2-3-Input OR-AND/OR-AND-Invert Gate	16	P,L	FN
118	Dual 2-Wide 3-Input OR-AND Gate	16	P,L	FN
119	4-Wide 4-3-3-3 Input OR-AND Gate	16	P,L	FN
121	4-Wide OR-AND/OR-AND-Invert Gate	16	P,L	FN
123	Triple 4-3-3 Input Bus Driver (25Ω)	16	P,L	FN
124	Quad TTL-to-MECL Translator	16	P,L	FN
125	Quad MECL-to-TTL Translator	16	P,L	FN
130	Dual Latch	16	P,L	FN
131	Dual Type-D Master-Slave Flip-Flop	16	P,L	FN
135	Dual J-K Master-Slave Flip-Flop	16	P,L	FN
136	Universal Hexadecimal Counter	16	P,L	FN
141	4-Bit Universal Shift Register	16	P,L	FN
145	16 X 4-Bit Register File	16	P,L	FN
158	Quad 2-Input Multiplexer, Non-Inverting Output	16	P,L	FN
159	Quad 2-Input Multiplexer, Inverting Output	16	P,L	FN
160	12-Bit Parity Generator/Checker	16	P,L	FN
161	Binary to 1-8 Decoder, (Low)	16	P,L	FN
162	Binary to 1-8 Decoder, (High)	16	P,L	FN
164	8-Line Multiplexer	16	P,L	FN
165	8-Input Priority Encoder	16	P,L	FN
166	5-Bit Magnitude Comparator	16	P,L	FN
171	Dual Binary to 1-4 Decoder (Low)	16	P,L	FN

* ≤ 20-Pin DIP = 20-Pin PLCC; > 20-Pin DIP = 28-Pin PLCC; See Conversion Table on Page 3.1-61

MECL 10H

Numeric Listing

MC10H	Function	Pins	DIP	SM*
172	Dual Binary to 1-5 Decoder (High)	16	P,L	FN
173	Quad 2 Input Multiplexer With Latch	16	P,L	FN
174	Dual 4-to-1 Multiplexer	16	P,L	FN
175	Quint Latch	16	P,L	FN
176	Hex D Master Slave Flip-Flop	16	P,L	FN
179	Look Ahead Carry Block	16	P,L	FN
180	Dual 2-Bit Adder/Subtractor	16	P,L	FN
181	4-Bit Arithmetic Logic Unit/Function Generator	24	P,L	FN
186	Hex D Master Slave Flip-Flop With Reset	16	P,L	FN
188	Hex Buffer With Enable	16	P,L	FN
189	Hex Inverter With Enable	16	P,L	FN
209	Dual 4-5-Input OR/NOR Gate	16	P,L	FN
210	Dual 3-Input, 3-Output OR Gate	16	P,L	FN
211	Dual 3-Input, 3-Output NOR Gate	16	P,L	FN
330	Quad Bus Driver/Receiver With 2-to-1 Output Multiplexer (25Ω)	24	P,L	FN
332	Dual Bus Driver/Receiver With 4-to-1 Output Multiplexer (25Ω)	20	P,L	FN
334	Quad Bus Driver/Receiver With Transmit & Receiver Latches (25Ω)	20	P,L	FN
350	PECL-to-TTL Translator (Single P.S. @+ 5.0V)	16	P,L	FN
351	Quad TTL NMOS-to-PECL Translator (Single P.S. @+ 5.0V)	20	P,L	FN
352	Quad CMOS-to-PECL Translator (Single P.S. @+ 5.0V)	20	P,L	FN
423	Triple 3-Input Bus Driver With Enable (25Ω)	16	P,L	FN
424	Quad TTL-to-ECL Translator (ECL Strobe)	16	P,L	FN
600	9-Bit TTL-ECL Translator	28		FN
601	9-Bit ECL-TTL Translator	28		FN
602	9-Bit Latch/TTL-ECL Translator	28		FN
603	9-Bit Latch/ECL-TTL Translator	28		FN
640	PECL/TTL-TTL Clock Distribution Chip (Single @ 5.0V)	28		FN
641	1-9 PECL-TTL Clock Distribution Chip (Single P.S. @ 5.0V)	28		FN
642	PECL-TTL Clock Driver (Similar To H640)	28		FN
643	1:8 ECL-TTL Clock Dist Chip (Dual Supply, H641)	28		FN
644	PECL/TTL Clock Driver	28		FN
645	1:9 TTL-TTL Clock Distribution Chip	28		FN
660	Quad Dual Output ECL-TTL Dram Driver With Latch	28		FN
680	Quad TTL-ECL 25Ω Bus Transceiver	28		FN
681	6-Bit 50Ω ECL-TTL Transceiver	28		FN

* ≤ 20-Pin DIP = 20-Pin PLCC; > 20-Pin DIP = 28-Pin PLCC; See Conversion Table on Page 3.1-61

ECLinPS

Numeric Listing

MC10E/ MC100E	Function	Pins	DIP	SM
016	8-Bit Synchronous Binary Up Counter	28		FN
101	Quad 4-Input OR/NOR Gate	28		FN
104	Quint 2-Input AND/NAND, AND/OR Gate	28		FN
107	Quint 2-Input XOR/XNOR, XOR/OR Gate	28		FN
111	1:9 Differential Clock Driver With Low Skew, Enable, Vbb	28		FN
112	Quad Driver	28		FN
116	Quint Differential Line Receiver	28		FN
122	9-Bit Buffer	28		FN
131	4-Bit D Flip-Flop Individual Clock, Reset Differential Output	28		FN
136	6-Bit Universal Counter, (Lookahead Carry)	28		FN
137	8-Bit Ripple Counter	28		FN
141	8-Bit Universal Shift Register	28		FN
142	9-Bit Shift Register, 700MHz, With Asynchronous Master Reset	28		FN
143	9-Bit Register, 700MHz, With Asynchronous Master Reset	28		FN
150	6-Bit D Latch	28		FN
151	6-Bit D Register With Common Clock, Asynchronous Master Reset, Differential Outputs	28		FN
154	5-Bit 2:1 Mux-Latch, With Common Enable, Asynchronous Master Reset Differential Output	28		FN
155	6-Bit 2:1 Mux-Latch, With Common Enable, Asynchronous Master Reset Single Ended	28		FN
156	3-Bit 4:1 Mux-Latch, With Common Enable, Asynchronous Master Reset, Differential Output	28		FN
157	Quad 2:1 Mux, Individual-Select	28		FN
158	5-Bit 2:1 Multiplexer, With Differential Output	28		FN
160	12-Bit Parity Generator/Checker, Register-Shiftable, Differential Output	28		FN
163	2-Bit 8:1 Multiplexer	28		FN
164	16:1 Multiplexer	28		FN
166	9-Bit Magnitude Comparator	28		FN
167	6-Bit 2:1 Mux-Register With Common Clock, Asynchronous Master Reset Single Ended	28		FN
171	3-Bit 4:1 Multiplexer, With Split Select Differential Output	28		FN
175	9-Bit Latch, With Parity	28		FN
193	Error Detection and Correction Circuit	28		FN
195	Programmable Delay Chip (Digitally Selectable 20ps Res)	28		FN
196	Programmable Delay Chip (Digital 80ps Analog 1.6ps/mV)	28		FN
197*	Data Separator	28		FN
211	1:6 Differential Clock Distribution Chip	28		FN
212	3-Bit Scannable Registered Address Driver, ECL	28		FN
241	8-Bit Scannable Register	28		FN

*Available in 10E only

ECLinPS
Numeric Listing

MC10E/ MC100E	Function	Pins	DIP	SM
256	3-Bit 4:1 Mux-Latch (Integrated E156 & E171)	28		FN
336	3-Bit Registered Bus Transceiver, 25Ω Cutoff Outputs	28		FN
337	3-Bit Scannable Registered Bus Transceiver	28		FN
404	Quad Differential AND/NAND Gate	28		FN
416	Quint Differential Line Receiver	28		FN
431	3-Bit Differential Flip-Flop	28		FN
445	4-Bit Serial/Parallel Converter	28		FN
446	4-Bit Parallel/Serial Converter	28		FN
451	6-Bit D Register, With Differential Inputs, (Data & Clock) , Vbb, Common Reset	28		FN
452	5-Bit Differential Register	28		FN
457	Triple Differential 2:1 Multiplexer	28		FN

* Available in 10E Only

CMOS

Motorola offers three complete CMOS families, each enhanced for different design applications. Metal Gate CMOS, for low power and wide ranging voltage applications; High–Speed CMOS for compatibility with LSTTL; and FACT (Advanced CMOS) combining the best of both families with high speed, low power and high output drive characteristics.

Metal Gate CMOS

Motorola's Standard 14000 Series Metal Gate CMOS logic family consists of a full line of 125 products which are pinout compatible with many LSTTL and High-Speed CMOS series devices. These Metal Gate CMOS devices meet or exceed the industry-standardized family specifications. Some additional features are:

- Very Low Power Dissipation
- Available Packages: Dual-in-Line Ceramic, Dual-in-Line Plastic and SOIC
- Electrical Parameters Specified –55°C to +125°C on all packages
- 3–18 Volt Operational Limits
- Parameters Specified at 5.0V, 10V and 15V Supply
- Capable of Driving Two Low-Power TTL Loads or One Low-Power Schottky TTL Load Over the Rated Temperature Range
- Direct Interface to High-Speed CMOS and Many LSTTL Devices
- Maximum Input Current of ±1.0µA at 15V Power Supply Over the Temperature Range
- Noise Margins:
  - B Series (Buffered)
    - 1.0V Min @ 5.0V Supply
    - 2.0V Min @ 10V Supply
    - 2.5V Min @ 15V Supply
  - UB Series (Unbuffered)
    - 0.5V Min @ 5.0V Supply
    - 1.0V Min @ 10V Supply
    - 1.0V Min @ 15V Supply
- 125 Functional Device Types Available
- UB Devices Have Single Inverting Stage Between Input and Output
  - Can Be Used in a Linear Mode to Form Oscillators, Monostables or Amplifiers
  - Decreased Gain Results in Increased Stability and a Cleaner Output Waveform
  - Increases Speed Since Only a Single Stage Is Involved

High-Speed CMOS

Motorola's High-Speed CMOS logic family consists of a full line of products that are pinout compatible with many LSTTL and MC14000B Stabdard CMOS series devices. Use of silicon-gate processing technology allows the High-Speed CMOS family to combine the switching speeds and operating frequencies of LSTTL with the lower power consumption and high noise immunity advantages of CMOS.

- Wide Operating Voltage Range
  - HC/HCU: 2.0–6.0V Recommended
  - HCT: 5.0V ±10% Recommended
- High Noise Immunity
- High Fanout
  - Standard Outputs Drive 10 LSTTL Loads (4mA)
  - Bus Outputs Drive 15 LSTTL Loads (6mA)
- Wide Operating Temperature Range: –55°C to +125°C
- Low Input Current
- Low Power Dissipation
- Improved ESD and Latch-Up Performance
- Direct Pin Compatibility:
  - HCXXX or HCTXXX With LSTTL
  - HC4XXX With CMOS
- Input Logic Compatible:
  - HCXXX or HC4XXX With CMOS
  - HCTXXX With LSTTL
- Availble Packages: Dual-in-Line Ceramic, Dual-in-Line Plastic and SOIC
- Proven Reliability and Process:
  - Reliability Report Availble From Your Local Motorola Sales Office

FACT CMOS

Motorola FACT is the latest advanced family of CMOS logic devices which offer system designers a solution to the problem of high speed and low power in a standard product. Until now, designers had to choose between either high speed with large power consumption, or low power with low speed.

Motorola FACT is fabricated using a sub-two micron, silicon gate process. This process has been proven in the past few years in high performance gate arrays and is the basis of the product family for future logic systems.

FACT is faster than any previous CMOS technology and approaches the speed of advanced bipolar devices. This superior speed allow direct replacement of slower speed CMOS or bipolar products with the inherent capabilities of advanced CMOS.

Low power consumption is a major advantage of CMOS. During standby operating mode, power consumption is near zero.

- High Output Drive: Sink or Source 24mA
- Providing Wide Logic Fanout and Will Drive a 50Ω Transmission Line
- Noise Immunity: Consistent, Predictable, Wide Margin Input Switching Level
- Standardized Packages/Pinouts: Available in Either Dual-in-Line or SOIC Packages
- Function Pinouts Adhere to Industry Standards for Interchangeability and Circuit Layout
- Motorola FACT Is Directly Interchangeable and Has Identical Performance Specifications With FACT From National Semiconductor Corporation

Logic Family Comparisons

General Characteristics (ALL MAXIMUM RATINGS)

Characteristics	Symbol	LS	ALS	HCMOS	FACT	Unit
Operating Voltage Range	$V_{CC/EE/DD}$	5 ± 5%	5 ± 10%	2.0 to 6.0	2.0 to 6.0	V
Operating Temperature	t_A 74 Series	0 to +70	0 to +70	–55 to +125	–40 to +85	°C
Input Voltage (limits)	V_{IH} (min)	2.0	2.0	3.15	3.15	V
	V_{IL} (max)	0.8	0.8	0.9	1.35	V
Output Voltage (limits)	V_{OH} (min)	2.7	2.7	V_{CC} – 0.1	V_{CC} – 0.1	V
	V_{OL} (max)	0.5	0.5	0.1	0.1	V
Input Current	I_{IH}	20	20	+1.0	+1.0	µA
	I_{IL}	–400	–200	–1.0	–1.0	µA
Output Current @ V_O (limit)	I_{OH}	–0.4	–0.4	–4.0 @ V_{CC} –0.8	–24 @ V_{CC} – 0.8	mA
	I_{OL}	8.0	8.0	4.0 @ 0.4 V	24 @ 0.4 V	mA
DC Noise Margin LOW/HIGH	DCM	0.3/0.7	0.4/0.7	0.8/1.25	1.25/1.25	V
DC Fanout (LSTTL Unit Loads)		20	20	10	60	Unit Loads

Speed/Power Characteristics (ALL TYPICAL RATINGS)

Characteristics	Symbol	LS	ALS	HCMOS	FACT	Unit
Quiescent Supply Current/Gate	I_G	0.4	0.2	0.0005	0.0005	mA
Power/Gate (Quiescent)	P_G	2.0	1.2	0.0025	0.0025	mW
Propagation Delay	t_P	7.0	5.0	8.0	4.8	ns
Speed Power Product	—	14	6.0	0.02	0.01	pJ
Clock Frequency D/FF	f_{max}	33	50	50	160	MHz

Standard 14000 Series

Numeric Listing

MC	Function	Pins	DIP	SM
14000UB	Dual 3-Input NOR Gate + Inverter	14	P,L	D
14001B	Quad 2-Input NOR Gate	14	P,L	D
14001UB	Quad 2-Input NOR Gate	14	P,L	D
14002B	Dual 4-Input NOR Gate	14	P,L	D
14002UB	Dual 4-Input NOR Gate	14	P,L	D
14006B	18-Bit Static Shift Register	14	P,L	D
14007UB	Dual Complementary Pair Plus Inverter	14	P,L	D
14008B	4-Bit Full Adder	16	P,L	D
14011B	Quad 2-Input NAND Gate	14	P,L	D
14011UB	Quad 2-Input NAND Gate	14	P,L	D
14012B	Dual 4-Input NAND Gate	14	P,L	D
14012UB	Dual 4-Input NAND Gate	14	P,L	D
14013B	Dual D Flip-Flop	14	P,L	D
14014B	8-Bit Static Shift Register	16	P,L	D
14015B	Dual 5-Bit Shift Register	16	P,L	D
14016B	Quad Analog Switch/Multiplexer	14	P,L	D
14017B	Decade Counter	16	P,L	D
14018B	Presettable Divide-by-N Counter	16	P,L	D
14020B	14-Bit Binary Counter	16	P,L	D
14021B	8-Bit Static Shift Register	16	P,L	D
14022B	Octal Counter	16	P,L	D
14023B	Triple 3-Input NAND Gate	14	P,L	D
14023UB	Triple 3-Input NAND Gate	14	P,L	D
14024B	7-Stage Ripple Counter	14	P,L	D
14025B	Triple 3-Input NOR Gate	14	P,L	D
14025UB	Triple 3-Input NOR Gate	14	P,L	D
14027B	Dual J-K Flip-Flop	16	P,L	D
14028B	BCD-to-Decimal/Binary-to-Octal Decoder	16	P,L	D
14029B	Presettable Binary/BCD Up/Down Counter	16	P,L	D
14032B	Triple Serial Adder (Positive Logic)	16	P,L	D
14034B	8-Bit Universal Bus Register	24	P,L	D
14035B	4-Bit Shift Register	16	P,L	D
14038B	Triple Serial Adder (Negative Logic)	16	P,L	D
14040B	12-Bit Binary Counter	16	P,L	D
14042B	Quad Transparent Latch	16	P,L	D

Standard 14000 Series

Numeric Listing (continued)

MC	Function	Pins	DIP	SM
14043B	Quad NOR R-S Latch	16	P,L	D
14044B	Quad NAND R-S Latch	16	P,L	D
14046B	Phase-Locked Loop	16	P,L	DW
14049B	Hex Invertering Buffer	16	P,L	D
14049UB	Hex Inverting Buffer	16	P,L	D
14050B	Hex Non-Inverting Buffer	16	P,L	D
14051B	8-Channel Analog Multiplexer/Demultiplexer	16	P,L	D
14052B	Dual 4-Channel Analog Multiplexer/Demultiplexer	16	P,L	D
14053B	Triple 2-Channel Analog Multiplexer/Demultiplexer	16	P,L	D
14060B	14-Bit Binary Counter and Oscillator	16	P,L	D
14066B	Quad Analog Switch/Multiplexer	14	P,L	D
14067B	16-Channel Analog Multiplexer/Demultiplexer	24	P,L	D
14068B	8-Input NAND Gate	14	P,L	D
14069UB	Hex Inverter	14	P,L	D
14070B	Quad Exclusive OR Gate	14	P,L	D
14071B	Quad 2-Input OR Gate	14	P,L	D
14072B	Dual 4-Input OR Gate	14	P,L	D
14073B	Triple 3-Input AND Gate	14	P,L	D
14075B	Triple 3-Input OR Gate	14	P,L	D
14076B	Quad D-Type Register With 3-State Outputs	16	P,L	D
14077B	Quad Exclusive NOR Gate	14	P,L	D
14078B	8-Input NOR Gate	14	P,L	D
14081B	Quad 2-Input AND Gate	14	P,L	D
14082B	Dual 4-Input AND Gate	14	P,L	D
14093B	Quad 2-Input NAND Schmitt Trigger	14	P,L	D
14094B	8-Stage Shift/Store Register With 3-State Outputs	16	P,L	D
14097B	Dual 8-Channel Analog Multiplexer/Demultiplexer	24	P,L	D
14099B	8-Bit Addressable Latch	16	P,L	DW
14106B	Hex Schmitt Trigger	14	P,L	
14160B	BCD Counter, Synchronous Presettable	16	P,L	D
14161B	4-Bit Binary Counter, Synchronous Presettable	16	P,L	D
14162B	BCD Counter, Synchronous Presettable	16	P,L	D
14163B	4-Bit Binary Counter, Synchronous Presettable	16	P,L	D
14174B	Hex D Flip-Flop	16	P,L	D
14175B	Quad D Flip-Flop	16	P,L	D
14194B	4-Bit Universal Shift Register	16	P,L	D

Standard 14000 Series

Numeric Listing (continued)

MC	Function	Pins	DIP	SM
14415B	Quad Precision Timer/Driver	16	P,L	DW
14490B	Hex Contact Bounce Eliminator	16	P,L	DW
14500B	Industrial Control Unit	16	P,L	DW
14501UB	Dual 4-Input NAND, 2-Input NOR/OR, 8-Input AND/NAND Gate	16	P,L	D
14502B	Strobed Hex Inverter/Buffer	16	P,L	DW
14503B	Hex With 3-State Outputs Buffer (Non-Inverting)	16	P,L	D
14504B	Hex TTL OR CMOS to CMOS Hex Level Shifter	16	P,L	D
14506UB	Dual Expandable AND OR Invert Gate	16	P,L	D
14508B	Dual 4-Bit Latch	24	P,L	D
14510B	Presettable BCD Up/Down Counter	16	P,L	D
14511B	BCD-to-7-Segment Latch/Decoder/Driver	16	P,L	D,DW
14512B	8-Channel Data Selector	16	P,L	D
14513B	BCD-to-7-Segment Latch/Decoder/Driver With Ripple Blanking	18	P,L	D
14514B	4-BitTransparent Latch/4-to-16 Line Decoder (High)	24	P,L	D
14515B	4-BitTransparent Latch/4-to-16 Line Decoder (Low)	24	P,L	D
14516B	Presettable Binary Up/Down Counter	16	P,L	D
14517B	Dual 64-Bit Static Shift Register	16	P,L	DW
14518B	Dual BCD Up Counter	16	P,L	DW
14519B	4-Bit AND/OR Selector	16	P,L	D
14520B	Dual Binary Up Counter	16	P,L	DW
14521B	24-Stage Frequency Divider	16	P,L	D
14522B	Programmable BCD Down Counter	16	P,L	DW
14526B	Presettable 4-Bit Binary Down Counter	16	P,L	DW
14527B	BCD Rate Multiplier	16	P,L	DW
14529B	Dual 4-Channel Analog Data Selector	16	P,L	D
14530B	Dual 5-Input Majority Logic Gate	16	P,L	D
14531B	12-Bit Parity Tree	16	P,L	D
14532B	8-Bit Priority Encoder	16	P,L	D
14534B	5 Cascaded BCD Counters	24	P,L	D
14536B	Programmable Timer	16	P,L	DW
14538B	Dual Precision Monostable Multivibrator	16	P,L	DW
14539B	Dual 4-Channel Data Selector/Multiplexer	16	P,L	D
14541B	Programmable Oscillator Timer	14	P,L	D
14543B	BCD-to-7-Segment Latch/decoder/Driver for Liquid Crystals	16	P,L	D

Standard 14000 Series

Numeric Listing (continued)

MC	Function	Pins	DIP	SM
14544B	BCD-to-7-Segment Latch/Decoder/Driver With Ripple Blanking	18	P,L	
14547B	High Current BCD-to-7-Segment Decoder/Driver	16	P,L	D
14549B	Successive Approximation Register	16	P,L	D
14551B	Quad 2-Channel Analog Multiplexer/Demultiplexer	16	P,L	D
14553B	3-Digit BCD Counter	16	P,L	DW
14554B	2 X 2-Bit Parallel Binary Multiplier	16	P,L	D
14555B	Dual Binary To 1-of-4 Decoder (Active High Outputs)	16	P,L	D
14556B	Dual Binary To 1-of-4 Decoder (Active Low Outputs)	16	P,L	D
14557B	1-to-64-Bit Variable Length Shift Register	16	P,L	DW
14558B	BCD-to-7-Segment Decoder	16	P,L	D
14559B	Successive Approximation Register	16	P,L	D
14560B	NBCD Adder	16	P,L	D
14561B	9's Complementer	14	P,L	D
14562B	128-Bit Static Shift Register	14	P,L	D
14566B	Industrial Time Base Generator	16	P,L	D
14568B	Phase Comparator and Programmable Counter	16	P,L	D
14569B	Programmable Dual Binary/BCD Counter	16	P,L	DW
14572UB	Hex NAND/NOR/Invert Gate	16	P,L	D
14580B	4 X 4 Multiport Register	24	P,L	D
14581B	4-Bit Arithmetic Logic Unit	24	P,L	D
14582B	Look-ahead Carry Block	16	P,L	D
14583B	Dual Schmitt Trigger	16	P,L	D
14584B	Hex Schmitt Trigger	14	P,L	D
14585B	4-Bit Magnitude Comparator	16	P,L	D
14597B	8-Bit Bus Compatible Counter/latch	16	P,L	DW
14598B	8-Bit Bus Compatible Addressable Latch	18	P,L	
14599B	8-Bit Addressable Latch	18	P,L	D

High-Speed

Numeric Listing

MC54/ MC74	Function	Pins	DIP	SM
HC00A	Quad 2-Input NAND Gate	14	N,J	D
HC02A	Quad 2-Input NOR Gate	14	N,J	D
HC03A	Quad 2-Input NAND Gate With Open-Drain Outputs	14	N,J	D
HCU04	Hex Unbuffered Inverter	14	N,J	D
HC04A	Hex Inverter	14	N,J	D

High-Speed

Numeric Listing (continued)

MC54/ MC74	Function	Pins	DIP	SM
HC08A	Quad 2-Input AND Gate	14	N,J	D
HC10	Triple 3-Input NAND Gate	14	N,J	D
HC11	Triple 3-Input AND Gate	14	N,J	D
HC14A	Hex Schmitt Trigger Inverter	14	N,J	D
HC20	Dual 4-Input NAND Gate	14	N,J	D
HC27	Triple 3-Input NOR	14	N,J	D
HC30	8-Input NAND Gate	14	N,J	D
HC32A	Quad 2-Input OR Gate	14	N,J	D
HC42	1-of-10 Decoder	16	N,J	D
HC51	2-Wide, 2-Input/2-Wide, 3-Input AND-NOR Gate	14	N,J	D
HC58	2-Wide, 2-Input/2-Wide, 3-Input AND-OR Gate	14	N,J	D
HC73	Dual J-K Flip-Flop With Reset	14	N,J	D
HC74A	Dual D Flip-Flop With Set and Reset	14	N,J	D
HC75	Dual 2-Bit Transparent Latch	16	N,J	D
HC76	Dual J-K Flip-Flop With Set and Reset	16	N,J	D
HC85	4-Bit Magnitude Comparator	16	N,J	D
HC86	Quad 2-Input Exclusive OR Gate	14	N,J	D
HC107	Dual J-K Flip-Flop With Reset	14	N,J	D
HC109	Dual J-K (Bar) Flip-Flop With Set and Reset	16	N,J	D
HC112	Dual J-K Flip-Flop With Set and Reset	16	N,J	D
HC113	Dual J-K Flip-Flop With Set	14	N,J	D
HC125A	Quad 3-State Non-Inverting Buffer	14	N,J	D
HC126A	Quad 3-State Non-Inverting Buffer	14	N,J	D
HC132A	Quad 2-Input NAND Gate With Schmitt Trigger Inputs	14	N,J	D
HC133	13-Input NAND Gate	16	N,J	D
HC137	1-of-8 Decoder/Demultiplexer With Address Latch	16	N,J	D
HC138A	1-of-8 Decoder/Demultiplexer	16	N,J	D
HC139A	Dual 1-of-4 Decoder/Demultiplexer	16	N,J	D
HC147	Decimal-to-BCD Encoder	16	N,J	D
HC151	8-Input Data Selector/Multiplexer	16	N,J	D
HC153	Dual 4-Input Data Selector/Multiplexer	16	N,J	D
HC154	1-of-16 Decoder/Demultiplexer	24	N,J	
HC157A	Quad 2-Input Data Selector/Multiplexer	16	N,J	D
HC158	Quad 2-Input Data Selector/Multiplexer	16	N,J	D
HC160	Presettable Counter	16	N,J	D

High-Speed

Numeric Listing (continued)

MC54/ MC74	Function	Pins	DIP	SM
HC161A	Presettable Counter	16	N,J	D
HC162	Presettable Counter	16	N,J	D
HC163A	Presettable Counter	16	N,J	D
HC164	8-Bit Serial-Input/Parallel-Output Shift Register	14	N,J	D
HC165	8-Bit Serial or Parallel-Input/Serial-Output Shift Register	16	N,J	D
HC173	Quad 3-State D Flip-Flop With Common Clock & Reset	16	N,J	D
HC174A	Hex D Flip-Flop With Common Clock & Reset	16	N,J	D
HC175	Quad D Flip-Flop With Common Clock & Reset	16	N,J	D
HC194	4-Bit Bidirectional Universal Shift Register	16	N,J	D
HC195	4-Bit Universal Shift Register	16	N,J	D
HC237	1-of-8 Decoder/Demultiplexer With Address Latch	16	N,J	D
HC240A	Octal 3-State Inverting Buffer/Line Driver/Line Receiver	20	N,J	DW
HC241A	Octal 3-State Non-Inverting Buffer/Line Driver/Line Receiver	20	N,J	DW
HC242	Quad 3-State Inverting Bus Transceiver	14	N,J	D
HC244A	Octal 3-State Non-Inverting Buffer/Line Driver/Line Receiver	20	N,J	DW
HC245A	Octal 3-State Non-Inverting Bus Transceiver	20	N,J	DW
HC251	8-Input Data Selector/Multiplexer With 3-State Outputs	16	N,J	D
HC253	Dual 4-Input Data Selector/Multiplexer With 3-State Outputs	16	N,J	D
HC257	Quad 2-Input Data Selector/Multiplexer With 3-State Outputs	16	N,J	D
HC259	8-Bit Addressable Latch/1-of-8 Decoder	16	N,J	D
HC273A	Octal D Flip-Flop With Common Clock & Reset	20	N,J	DW
HC280	9-Bit Odd/Even Parity Generator/Checker	14	N,J	D
HC299	8-Bit Bidirectional Universal Shift Register With Parallel I/O	20	N,J	DW
HC354	8-Input Data Selector/Multiplexer With Data and Address Latchs and 3-State Outputs	20	N,J	DW
HC365	Hex 3-State Non-Inverting Buffer With Separate 2-Bit/4-Bit Sections	16	N,J	
HC366	Hex 3-State Inverting Buffer With Common Enables	16	N,J	
HC367	Hex 3-State Non-Inverting Buffer With Separate 2-Bit and 4-Bit Sections	16	N,J	
HC368	Hex 3-State Inverting Buffer With separate 2-Bit and 4-Bit Sections	16	N,J	
HC373A	Octal 3-State Non-Inverting Transparent Latch	20	N,J	DW
HC374A	Octal 3-State Non-Inverting D Flip-Flop	20	N,J	DW
HC390	Dual 4-Stage Binary Ripple Counter With ÷2, ÷5 Sections	16	N,J	D
HC393	Dual 4-Stage Binary Ripple Counter	14	N,J	D
HC533A	Octal 3-State Inverting Transparent Latch	20	N,J	DW
HC534A	Octal 3-State Inverting D Flip-Flop	20	N,J	DW
HC540	Octal 3-State Inverting Buffer/Line Driver/Line Receiver	20	N,J	DW

High-Speed

Numeric Listing (continued)

MC54/ MC74	Function	Pins	DIP	SM
HC541	Octal 3-State Non-Inverting Buffer/Line Driver/Line Receiver	20	N,J	DW
HC563	Octal 3-State Inverting Transparent Latch	20	N,J	DW
HC564	Octal 3-State Inverting D Flip-Flop	20	N,J	DW
HC573A	Octal 3-State Non-Inverting Transparent Latch	20	N,J	DW
HC574A	Octal 3-State Non-Inverting D Flip-Flop	20	N,J	DW
HC589	8-Bit Serial or Parallel-Input/Serial-Output Shift Register With 3-State	16	N,J	D
HC595A	8-Bit Serial-Input/Serial or Parallel-Output Shift Register With Latched 3-State Outputs	16	N,J	D
HC597	8-Bit Serial or Parallel-Input/Serial-Output Shift Register With Input Latch	16	N,J	D
HC640A	Octal 3-State Inverting Bus Transceiver	20	N,J	DW
HC646	Octal 3-State Non-Inverting Bus Transceiver & D Flip-Flop	24	N,J	DW
HC648	Octal 3-State Inverting Bus Transceiver & D Flip-Flop	24	N,J	DW
HC688	8-Bit Equality Comparator	20	N,J	DW
HC4002	Dual 4-Input NOR Gate	14	N,J	D
HC4016	Quad Analog Switch/Multiplexer/Demultiplexer	14	N,J	D
HC4017	Decade Counter (Synchronous Clear)	16	N,J	D
HC4020	14-Stage Binary Ripple Counter	16	N,J	D
HC4024	7-Stage Binary Ripple Counter	14	N,J	D
HC4046A	Phase-Locked-Loop With VCO	16	N,J	D
HC4049	Hex Inverting Buffer/Logic-Level Down Converter	16	N,J	D
HC4050	Hex Non-Inverting Buffer/Logic-Level Down Converter	16	N,J	D
HC4051	8-Channel Analog Multiplexer/Demultiplexer	16	N,J	D
HC4052	Dual 4-Channel Analog Multiplexer/Demultiplexer	16	N,J	D
HC4053	Triple 2-Channel Analog Multiplexer/Demultiplexer	16	N,J	D
HC4060	14-Stage Binary Ripple Counter With Oscillator	16	N,J	D
HC4066	Quad Analog Switch/Multiplexer/Demultiplexer	14	N,J	D
HC4075	Triple 3-Input OR Gate	14	N,J	D
HC4078	8-Input NOR/OR Gate	14	N,J	D
HC4316	Quad Analog Switch/Multiplexer/Demultiplexer With Separate Analog/Digital Power Supplies	16	N,J	D
HC4351	8-Channel Analog Multiplexer/Demultiplexer With Address Latch	20	N,J	DW
HC4352	Dual 4-Channel Analog Multiplexer/Demultiplexer With Address Latch	20	N,J	DW
HC4353	Triple 2-Channel Analog Multiplexer/Demultiplexer With Address Latch	20	N,J	DW
HC4511	BCD-to-7 Segment Latch/Decoder/Display Driver	16	N,J	D
HC4514	1-of-16 Decoder/Demultiplexer With Address Latch	24	N,J	DW
HC4538A	Dual Precision Monostable Multivibrator (Retriggerable, Resettable)	16	N,J	D
HC7266	Quad 2-Input Exclusive NOR Gate	14	N,J	D

High-Speed - TTL Compatible Devices

Numeric Listing

MC54/ MC74	Function	Pins	DIP	SM
HCT00A	Quad 2-Input NAND Gate	14	N,J	D
HCT04A	Hex Inverter With LSTTL Compatible Inputs	14	N,J	D
HCT08A	Quad 2-Input AND Gate	14	N,J	D
HCT14A	Hex Schmitt Trigger Inverter	14	N,J	D
HCT32A	Quad 2-Input OR Gate	14	N,J	D
HCT74A	Dual D Flip-Flop With Set and Reset	14	N,J	D
HCT138A	1-of-8 Decoder/Demultiplexer	16	N,J	D
HCT157A	Quad 2-Input Data Selector/Multiplexer	16	N,J	D
HCT158A	Quad 2-Input Data Selector/Multiplexer	16	N,J	D
HCT161A	Presettable Counter	16	N,J	D
HCT163A	Presettable Counter	16	N,J	D
HCT174A	Hex D Flip-Flop With Common Clock and Reset	16	N,J	D
HCT240A	Octal 3-State Inverting Buffer/Line Driver/Receiver With LSTTL Compatible Inputs	20	N,J	DW
HCT241A	Octal 3-State Non-Inverting Buffer/Line Driver/Line Receiver With LSTTL Compatible Inputs	20	N,J	DW
HCT244A	Octal 3-State Non-Inverting Buffer/Line Driver/Line Receiver With LSTTL Compatible Inputs	20	N,J	DW
HCT245A	Octal 3-State Non-Inverting Bus Transceiver With LSTTL Compatible Inputs	20	N,J	DW
HCT273A	Octal D Flip-Flop With Common Clock & Reset	20	N,J	DW
HCT373A	Octal 3-State Non-Inverting Transparent Latch With LSTTL Compatible Inputs	20	N,J	DW
HCT374A	Octal 3-State Non-Inverting D Flip-Flop With LSTTL Compatible Inputs	20	N,J	DW
HCT533A	Octal 3-State Inverting Transparent Latch With LSTTL Compatible Inputs	20	N,J	DW
HCT534A	Octal 3-State Inverting D Flip-Flop With LSTTL Compatible Inputs	20	N,J	DW
HCT540	Octal 3-State Inverting Buffer/Line Driver/Line Receiver With LSTTL Compatible Inputs	20	N,J	DW
HCT541	Octal 3-State Non-Inverting Buffer/Line Driver/Line Receiver With LSTTL Compatible Inputs	20	N,J	DW
HCT573A	Octal 3-State Non-Inverting Transparent Latch With LSTTL Compatible Inputs	20	N,J	DW
HCT574A	Octal 3-State Non-Inverting D Flip-Flop With LSTTL Compatible Inputs	20	N,J	DW
HCT640A	Octal 3-State Inverting Bus Transceiver With LSTTL Compatible Inputs	20	N,J	DW

FACT

Numeric Listing

MC74	Function	Pins	DIP	SM
AC00	Quad 2-Input NAND Gate	14	N	D
AC02	Quad 2-Input NOR Gate	14	N	D
AC04	Hex Inverter	14	N	D
AC05	Hex Inverter With Open Drainput Output	14	N	D
AC08	Quad 2-Input AND Gate	14	N	D
AC10	Triple 3-Input NAND Gate	14	N	D
AC11	Triple 3-Input AND Gate	14	N	D
AC14	Hex Inverter Schmitt Trigger	14	N	D
AC20	Dual 4-Input NAND Gate	14	N	
AC32	Quad 2-Input OR Gate	14	N	D
AC74	Dual D Flip-Flop	14	N	D
AC86	Quad 2-Input Exclusive OR Gate	14	N	D
AC109	Dual J-K Positive Edge-Triggered Flip-Flop With Set and Clear	16	N	D
AC125	Quad Buffer 3-State	14	N	
AC126	Quad Buffer 3-State	14	N	
AC132	Quad 2-Input NAND Schmitt Trigger	14	N	D
AC138	1-of-8 Decoder/Demux	16	N	D
AC139	Dual 1-of-4 Decoder/Demux	16	N	D
AC151	1-of-8 Decoder/Multiplexer	16	N	D
AC153	Dual 4-Input Multiplexer	16	N	D
AC157	Quad 2-Input Multiplexer: Non-Inverting	16	N	D
AC158	Quad 2-Input Multiplexer: Inverting	16	N	D
AC160	Synchronous Presettable Binary-Coded-Decimal Decade Counter	16	N	
AC161	Synchronous Presettable Binary Counter	16	N	
AC162	Synchronous Presettable Binary-Coded-Decimal Decade Counter	16	N	
AC163	Synchronous Presettable Binary Counter	16	N	D
AC174	Hex D Flip-Flop With Master Reset	16	N	D
AC190	Up/Down Counter With Preset and Ripple Clock	16	N	D
AC194	4-Bit Bidirectional Universal Shift Register	16	N	
AC240	Octal Buffer/Line Driver: 3-State	20	N	DW
AC241	Octal Buffer/Line Driver: 3-State	20	N	DW
AC244	Octal Buffer/Line Driver: 3-State	20	N	DW
AC245	Octal Bidirectional Transceiver With 3-State Inputs/Outputs	20	N	DW
AC251	8-Input Multiplexer: 3-State	16	N	D
AC253	Dual 4-Input Multiplexer With 3-State Outputs	16	N	DW

FACT

Numeric Listing (continued)

MC74	Function	Pins	DIP	SM
AC256	Dual 4-Bit Addressable Latch	16	N	DW
AC257	Quad 2-Input Multiplexer Non-Inverting 3-State	16	N	
AC258	Quad 2-Input Multiplexer Inverting 3-State	16	N	DW
AC259	8-Bit Addressable Latch	16	N	
AC273	Octal D Flip-Flop	20	N	DW
AC299	8-Input Universal Shift/Storage Register With Common Parallel I/O Pins: 3-State	20	N	DW
AC323	8-Input Universal Shift/Storage Register With Syn Reset/Common Parallel I/O Pins: 3-State	20	N	
AC350	4-Bit Shifter With 3-State	16	N	
AC352	Dual 4-Input Multiplexer	16	N	DW
AC353	Dual 4-Input Multiplexer With 3-State Outputs	16	N	D
AC373	Octal Transparent Latch With 3-State Outputs	20	N	DW
AC374	Octal D-Type Flip-Flop With 3-State Outputs	20	N	DW
AC377	Octal D Flip-Flop With Clock Enable	20	N	DW
AC378	6-Bit Parallel D Register With Enable	16	N	D
AC533	Octal Transparent Latch/3-State Outputs	20	N	
AC534	Octal D Flip-Flop 3-State Outputs	20	N	
AC540	Octal Buffer/Line Driver: 3-State Outputs	20	N	DW
AC541	Octal Buffer/Line Driver: 3-State Outputs	20	N	DW
AC563	Octal D Latch With 3-State Outputs	20	N	DW
AC564	Octal D Latch With 3-State Outputs	20	N	DW
AC573	Octal D-Type Latch With 3-State Outputs	20	N	DW
AC574	Octal D-Type Latch With 3-State Outputs	20	N	DW
AC620	Octal Bidirectional Transceiver With 3-State Outputs	20	N	
AC623	Octal Bidirectional Transceiver With 3-State Outputs	20	N	
AC640	Octal Bidirectional Transceiver With 3-State Outputs	20	N	DW
AC643	Octal Bidirectional Transceiver With 3-State Outputs	20	N	
AC646	Octal Transceiver/Register With 3-State Outputs Non-Inverting	24	N	DW
AC648	Octal Transceiver/Register With 3-State Outputs Inverting	24	N	
AC652	Octal Bus Transceiver/Register Non-Inverting 3-State	24	N	
AC810	Quad 2-Input Exclusive NOR Gate	14	N	DW
AC4020	14-Stage Binary Ripple Counter	16	N	D
AC4040	12-Stage Binary Ripple Counter	16	N	D

FACT - TTL Compatible Devices
Numeric Listing

MC74	Function	Pins	DIP	SM
ACT00	Quad 2-Input NAND Gate	14	N	D
ACT02	Quad 2-Input NOR Gate	14	N	D
ACT04	Hex Inverter	14	N	D
ACT05	Hex Inverter With Open Drainput Output	14	N	D
ACT08	Quad 2-Input AND Gate	14	N	D
ACT10	Triple 3-Input NAND Gate	14	N	D
ACT11	Triple 3-Input AND Gate	14	N	D
ACT14	Hex Inverter Schmitt Trigger	14	N	D
ACT20	Dual 4-Input NAND Gate	14	N	
ACT32	Quad 2-Input OR Gate	14	N	D
ACT74	Dual D Flip-Flop	14	N	D
ACT86	Quad 2-Input Exclusive OR Gate	14	N	D
ACT125	Quad Buffer 3-State	14	N	
ACT126	Quad Buffer 3-State	14	N	
ACT132	Quad 2-Input NAND Schmitt Trigger	14	N	D
ACT138	1-of-8 Decoder/Demux	16	N	D
ACT139	Dual 1-of-4 Decoder/Demux	16	N	D
ACT151	1-of-8 Decoder/Multiplexer	16	N	D
ACT153	Dual 4-Input Multiplexer	16	N	D
ACT157	Quad 2-Input Multiplexer: Non-Inverting	16	N	D
ACT160	Synchronous Presettable Binary-Coded-Decimal Decade Counter	16	N	
ACT161	Synchronous Presettable Binary Counter	16	N	
ACT162	Synchronous Presettable Binary-Coded-Decimal Decade Counter	16	N	
ACT163	Synchronous Presettable Binary Counter	16	N	D
ACT174	Hex D Flip-Flop With Master Reset	16	N	D
ACT194	4-Bit Bidirectional Universal Shift Register	16	N	
ACT240	Octal Buffer/Line Driver: 3-State	20	N	DW
ACT241	Octal Buffer/Line Driver: 3-State	20	N	DW
ACT244	Octal Buffer/Line Driver: 3-State	20	N	DW
ACT245	Octal Bidirectional Transceiver With 3-State Inputs/Outputs	20	N	DW
ACT251	8-Input Multiplexer: 3-State	16	N	D
ACT253	Dual 4-Input Multiplexer With 3-State Outputs	16	N	DW
ACT256	Dual 4-Bit Addressable Latch	16	N	DW
ACT258	Quad 2-Input Multiplexer Inverting 3-State	16	N	DW
ACT259	8-Bit Addressable Latch	16	N	

FACT - TTL Compatible Devices

Numeric Listing (continued)

MC74	Function	Pins	DIP	SM
ACT273	Octal D Flip-Flop	20	N	DW
ACT299	8-Input Universal Shift/Storage Register With Common Parallel I/O Pins: 3-State	20	N	
ACT323	8-Input Universal Shift/Storage Register With Syn Reset/Common Parallel I/O Pins: 3-State	20	N	
ACT350	4-Bit Shifter With 3-State	16	N	
ACT352	Dual 4-Input Multiplexer	16	N	DW
ACT353	Dual 4-Input Multiplexer With 3-State Outputs	16	N	D
ACT373	Octal Transparent Latch With 3-State Outputs	20	N	DW
ACT374	Octal D-Type Flip-Flop With 3-State Outputs	20	N	DW
ACT377	Octal D Flip-Flop With clock Enable	20	N	DW
ACT378	6-Bit Parallel D Register With Enable	16	N	D
ACT521	8-Bit Identity Comparator	20	N	
ACT533	Octal Transparent Latch With 3-State Outputs	20	N	
ACT534	Octal D Flip-Flop With 3-State Outputs	20	N	
ACT540	Octal Buffer/Line Driver: 3-State Outputs	20	N	DW
ACT541	Octal Buffer/Line Driver: 3-State Outputs	20	N	DW
ACT563	Octal D Latch With 3-State Outputs	20	N	DW
ACT564	Octal D Latch With 3-State Outputs	20	N	DW
ACT573	Octal D-Type Latch With 3-State Outputs	20	N	DW
ACT574	Octal D-Type Latch With 3-State Outputs	20	N	DW
ACT620	Octal Bidirectional Transceiver With 3-State Outputs	20	N	
ACT623	Octal Bidirectional Transceiver With 3-State Outputs	20	N	
ACT640	Octal Bidirectional Transceiver With 3-State Outputs	20	N	DW
ACT643	Octal Bidirectional Transceiver With 3-State Outputs	20	N	
ACT646	Octal Transceiver/Register With 3-State Outputs, Non-Inverting	24	N	
ACT648	Octal Transceiver/Register With 3-State Outputs, Inverting	24	N	
ACT652	Octal Bus Transceiver/Register, Non-Inverting 3-State	24	N	
ACT810	Quad 2-Input Exclusive NOR Gate	14	N	DW

Special Logic Circuits

Timing Solutions

Numeric Listing

MC	Function	Pins	DIP	SM
Clock Drivers				
10/100E111	1:9 Differential Clock Driver With Low Skew, Enable, Vbb	28		
10/100E211	1:6 Differential Clock Distribution Chip	28		
74F803	Clock Driver, Quad D-Type Flip-Flop, With Matched Propagation Delays	14	N,D	
74F1803	Clock Driver, Quad D-Type Flip-Flop	14	N,D	
10/100H640	PECL/TTL-TTL Clock Distribution Chip (Single @ 5.0V)	28		FN
10/100H641	1-9 /PECL-TTL Clock Distribution Chip (Single P.S. @ 5.0V)	28		FN
10/100H642	PECL-TTL Clock Driver (Similar to H640)	28		FN
10/100H643	1:8 ECL-TTL Clock Dist Chip (Dual Supply, H641)	28		FN
10/100H644	PECL/TTL Clock Driver	28		FN
10/100H645	1:9 TTL-TTL Clock Distribution Chip	28		FN
88913	Low Skew CMOS Clock Driver	14	N	D
88914	Low Skew CMOS Clock Driver With Reset	14	N	D
88915*55	Low Skew CMOS PLL Clock Driver	28		FN
88915*70	Low Skew CMOS PLL Clock Driver	28		FN
Programmable Delay Chips				
10/100E195	Programmable Delay Chip (Digitally Selectable 20ps Res)	28		FN
10/100E196	Programmable Delay Chip (Dig 20ps Anal. < lps)	28		FN

Phased-Locked Loop

Numeric Listing

MC	Function	Pins	DIP	SM
4016	Programmable Modulo-N Counters (N = 0–9)	16	P,L	
4018	Programmable Modulo-N Counters (N = 0–9)	16	P,L	
4024	Dual Voltage-Controlled Multivibrator	16	P,L	
4044	Phase-Frequency Detector	14	P,L	
4316	Programmable Modulo-N Counters (N = 0–9)	16	P,L	
4324	Dual Voltage-Controlled Multivibrator	16	P,L	
4344	Phase-Frequency Detector	14	P,L	
12002	Analog Mixer	14	P,L	
12009	÷5, ÷6 Dual Modulus Prescaler, 480 MHz	16	P,L	D, FN
12011	÷8, ÷9 Dual Modulus Prescaler, 550 MHz	16	P,L	D, FN

Special Logic Circuits

Phased-Locked Loop (continued)

Numeric Listing (continued)

MC	Function	Pins	DIP	SM
12013	÷10, ÷11 Dual Modulus Prescaler, 550 MHz	16	P,L	D, FN
12014	Counter Control Logic	16	P,L	
12015	÷32, ÷33, Low Power Dual Modulus Prescaler, 225 MHz	8	P	D
12016	÷40, ÷41, Low Power Dual Modulus Prescaler, 225 MHz	8	P	D
12017	÷64, ÷65, Low Power Dual Modulus Prescaler, 225 MHz	8	P	D
12018	÷128, ÷129 Low Power Dual Modulus Prescaler, 520 MHz	8	P	D
12019	÷20, ÷21 Low Power Dual Modulus Prescaler, 225 MHz	8	P	D
12022A	÷64, ÷65, ÷128, ÷129 Dual Modulus Prescaler, 1.1 GHz, Positive Trigger	8	P	D
12022B	÷64, ÷65, ÷128, ÷129 Dual Modulus Prescaler, 1.2 GHz, Negative Trigger	8	P	D
12022LVA	÷64, ÷65, ÷128, ÷129 Low Voltage Dual Modulus Prescaler, 1.1 GHz, Positive Trigger	8	P	D
12022LVB	÷64, ÷65, ÷128, ÷129 Low Voltage Dual Modulus Prescaler, 1.1 GHz, Negative Trigger	8	P	D
12022SLA	÷64, ÷65, ÷128, ÷129 Low Power Dual Modulus Prescaler, 1.1 GHz, Positive Trigger	8	P	D
12022SLB	÷64, ÷65, ÷128, ÷129 Low Power Dual Modulus Prescaler, 1.1 GHz, Negative Trigger	8	P	D
12022TSB	÷64, ÷65, ÷128, ÷129 Low Power Dual Modulus Prescaler, 1.1 GHz, SLB With X LD Die	8	P	D
12022TVA	÷64, ÷65, ÷128, ÷129 Low Voltage Dual Modulus Prescaler, 1.1 GHz LVA With X LD Die	8	P	D
12022TVB	÷64, ÷65, ÷128, ÷129 Low Voltage Dual Modulus Prescaler, 1.1 GHz, LVB With X LD Die	8	P	D
12023	÷64 Low Power Prescaler, 225 MHz, V_{CC} = 3.2 to 5.5V	8	P	D
12025	÷64, ÷65 Low Power Dual Modulus Prescaler, 520 MHz	8	P	D
12028A	÷32, ÷33, ÷64, ÷65 Low Power Dual Modulus Prescaler, 1.1 GHz, Positive Trigger	8	P	D
12028B	÷32, ÷33, ÷64, ÷65 Low Power Dual Modulus Prescaler, 1.1 GHz, Negative Tigger	8	P	D
12032A	÷64, ÷65, ÷128, ÷129 Low Power Dual Modulus Prescaler, 2.0 GHz, Positive Trigger	8	P	D
12032B	÷64, ÷65, ÷128, ÷129 Low Power Dual Modulus Prescaler, 2.0 GHz, Negative Trigger	8	P	D
12034A	÷32, ÷33, ÷64, ÷65 Low Power Dual Modulus Prescaler, 2.0 GHz, Positive Trigger	8	P	D
12034B	÷32, ÷33, ÷64, ÷65 Low Power Dual Modulus Prescaler, 2.0 GHz, Negative Trigger	8	P	D
12040	Phase-Frequency Detector	14	P,L	FN
12061	Crystal Oscillator	16	P,L	FN
12073	÷64 Low Power Prescaler, 1.1 GHz	8	P	D
12074	÷256 Low Power Prescaler, 1.1 GHz	8	P	D
12076	÷256 Low Power Prescaler, Enhanced 12074, 1.3 GHz	8	P	D
12078	÷256 Low Power Prescaler, Enhanced 12074, 1.3 GHz	8	P	D
12090	÷2 UHF Prescaler, 750 MHz	16	P,L	FN

Special Logic Circuits

Translators

Numeric Listing

MC	Function	Pins	DIP	SM*
10177	Triple MECL-to-NMOS Translator	16	L	
10190	Quad MST-to-MECL 10K Translator	16	P,L	FN
14504B	Hex TTL OR CMOS to CMOS Hex Level Shifter	16	P,L	D
10/100H124	Quad TTL-to-MECL Translator	16	P,L	FN
10/100H125	Quad MECL-to-TTL Translator	16	P,L	FN
10H350	PECL-to-TTL Translator (Single P.S. @+ 5.0V)	16	P,L	FN
10H351	Quad TTL/NMOS-to-PECL Translator (Single P.S. @+ 5.0V)	20	P,L	FN
10H352	Quad CMOS-to-ECL Translator (Single P.S. @+ 5.0V)	20	P,L	FN
10H424	Quad TTL-to-ECL Translator (ECL Strobe)	16	P,L	FN
10/100H600	9-Bit TTL-ECL Translator	28		FN
10/100H601	9-Bit ECL-TTL Translator	28		FN
10/100H602	9-Bit Latch/TTL-ECL Translator	28		FN
10/100H603	9-Bit Latch/ECL-TTL Translator	28		FN

* ≤ 20-Pin DIP = 20-Pin PLCC; > 20-Pin DIP = 28-Pin PLCC; See Conversion Table on Page 3.1-61

CBM

Numeric Listing

Device	Function	Pins	DIP	SM
MC68194	CBM – Carrier Band Modem	52		*FJ

* FJ = Ceramic Leadless Chip Carrier (CLCC)

SCSI Bus Terminator

Numeric Listing

Device	Function	Pins	DIP	SM
MCCS142233	9–Bit Switchable SCSI Bus Term (220Ω & 330Ω: Passive)	20		FN

Special Logic Circuits

Memory Support

Numeric Listing

MC	Function	Pins	DIP	SM*
10/100H660	Quad Dual Output ECL-TTL DRAM Driver With Latch	28		FN
74F2960	Error Detection and Correction Circuit	48	J,N	
74F2960A	Error Detection and Correction Circuit	48	J,N	
74F2961A	4-Bit Error Correction Multiple Bias Buffers, Inverting	24	J,N	
74F2962A	4-Bit Error Correction Multiple Bias Buffers, Non-Inverting	24	J,N	
74F2968A	Dynamic Memory Controller (DMC) for 256K DRAMs	48	J	FN**
74F2969	Enhanced Memory Timing Controller	48	J	FN**
74F2970	Memory Timing Controller	24	N,J	FN
74F29368	Dynamic Memory Controller, 1 Megabit (DMC)	68		FN

* ≤ 20-Pin DIP = 20-Pin PLCC; > 20-Pin DIP = 28-Pin PLCC; See Conversion Table on Page 3.1-61
** 48-Pin DIP = 68-Pin PLCC

MECL III

Numeric Listing

MC	Function	Pins	DIP	SM*
1648	Voltage Controlled Oscillator	14	P,L	D, FN
1650	Dual A/D Converter	16	L	
1651	Dual A/D Converter	16	L	FN
1652	Dual Analaog Comparator With Latch	16	L	FN
1658	Voltage Controlled Multivibrator	16	P,L	D, FN
1660	Dual 4-Input OR/NOR Gate	16	L	
1662	Quad 2-Input NOR Gate	16	L	
1670	Master-Slave Flip-Flop	16	L	
1672	Triple 2-Input Exclusive-OR Gate	16	L	
1692	Quad Line Receiver	16	L	

* ≤ 20-Pin DIP = 20-Pin PLCC; > 20-Pin DIP = 28-Pin PLCC; See Conversion Table on Page 3.1-61

HTL/DTL Circuits

Motorola still supplies a large selection of HTL (High-Threshold Logic) and DTL (Diode-Transistor Logic) circuits. These are recommended primarily for replacement purposes. A list of available type numbers is given below.

DTL

Device Number	Function
MC830	Expandable NAND Gate
MC832	Expandable Buffer
MC833	Dual Expander
MC835	Hex Inverter (without output resistors)
MC836	Hex Inverter
MC837	Hex Inverter
MC838	Decade Counter
MC840	Hex Inverter (without input diodes)
MC841	Hex Inverter (without output resistors and input diodes)
MC844	Expandable Dual Power Gate
MC845	Clocked Flip-Flop
MC846	Quad 2-Input NAND Gate
MC848	Clocked Flip-Flop
MC849	Quad 2-Input NAND Gate
MC936	Hex Inverter
MC937	Hex Inverter
MC938	Decade Counter
MC940	Hex Inverter (without input diodes)
MC944	Expandable Dual Power Gate
MC945	Clocked Flip-Flop
MC946	Quad 2-Input NAND Gate
MC948	Clocked Flip-Flop
MC949	Quad NAND Gate
MC951	Monostable Multivibrator
MC952	Dual J-K Flip-Flop (common clock and CD Separate SD)
MC953	Dual J-K Flip-Flop (separate clock and SD, No CD)
MC955	Dual J-K Flip-Flop (common clock and CD, separate SD, 2K pullup resistor)

HTL

Device Number	Function
MC660	Expandable Dual 4-Input Gate (active pullup)
MC661	Expandable Dual 4-Input Gate (passive pullup)
MC662	Expandable Dual 4-Input Line Driver
MC663	Dual J-K Flip-Flop
MC664	Master-Slave R-S Flip-Flop
MC667	Dual Monostable Multivibrator
MC668	Quad 2-Input Gate (passive pullup)
MC669	Dual 4-Input Expander
MC670	Triple 3-Input Gate (passive pullup)
MC671	Triple 3-Input Gate (active pullup)
MC672	Quad 2-Input Gate (active pullup)
MC675	Dual Pulse Stretcher
MC677	Hex Inverter With Strobe (active pullup)
MC678	Hex Inverter With Strobe (without output resistors)

Ordering Information

Device Nomenclatures

LS – Low Power Schottky

SN VV WW XXXX Y

Standard Prefix — SN

Temperature Range — VV
- 74 Series (–55 to +125°C)
- 54 Series (–55 to +125°C)

Family — WW
- LS = Low Power Schottky

Function Type — XXXX

Package Type — Y
- N for Plastic (74 Series Only)
- J for Ceramic (54 Series Only)
- D for 150 mil Plastic SOIC (74 Series Only)
- DW for 300 mil Plastic SOIC (74 Series Only)

FAST

MC VV W XXXX Y

Motorola Circuit Identifier — MC

Temperature Range — VV
- 74 Series (–55 to +125°C)
- 54 Series (–55 to +125°C)

Family — W
- F = FAST

Function Type — XXXX

Package Type — Y
- N for Plastic (74 Series Only)
- J for Ceramic (54 Series Only)
- D for 150 mil Plastic SOIC (74 Series Only)
- DW for 300 mil Plastic SOIC (74 Series Only)

MECL 10K/MECL 10H

MC WWW XXX YY

Motorola Circuit Identifier — MC

Temperature Range — WWW
- 10 = 10K (–30 to +85°C)
- 10H = 10H (0 to +75°C)

Function Type — XXX

Package Type — YY
- P for Plastic
- L for Ceramic
- FN for PLCC

ECLinPS

MC WWW E XXX YY

Motorola Circuit Identifier — MC

Compatability Identifier — WWW
- 10 = 10H Compatible (0 to +75°C)
- 100 = 100K Compatible (0 to +85°C)

ECLinPS Family Identifier — E

Function Type — XXX

Package Type — YY
- FN for PLCC

High-Speed CMOS

MC VV WWW XXXX Y

- **MC** — Motorola Circuit Identifier
- **VV** — Temperature Range
  - 74 Series (–55 to +125°C)
  - 54 Series (–55 to +125°C)
- **WWW** — High-Speed CMOS Specification Identifier
  - HC = Buffered High-Speed CMOS
  - HCU = Unbuffered High-Speed CMOS*
  - HCT = High-Speed CMOS TTL Compatible
- **XXXX** — Function Type
  - XX(X) Same Function and Pin Configuration as LSTTL
  - 4XXX Same Function and Pin Configuration as CMOS 14000
  - 7XX(X) Variation of LSTTL or CMOS 14000 Device
- **Y** — Package Type
  - N for Plastic (74 Series Only)
  - J for Ceramic (54 Series Only)
  - D for 150 mil Plastic SOIC (74 Series Only)
  - DW for 300 mil Plastic SOIC (74 Series Only)

***Not Available On All Devices**

14000 Series CMOS

MC1 4xxx Y ZZ

- **MC1** — Motorola Circuit Identifier
- **4xxx** — Function Type
- **Y** — Identifier (per JEDEC Standard)
  - B = Buffered Outputs
  - UB = Unbuffered Outputs
- **ZZ** — Package and Temperature Range
  - CL for Cerdip (Frit-Seal Ceramic) –55°C to +125°C
  - CP for Epoxy (Plastic) –55°C to +125°C
  - D/DW for Small Outline Package (Plastic) –55°C to +125°C

FACT

MC WWWWW XXX YY

- **MC** — Motorola Circuit Identifier
- **WWWWW** — Temperature Range Family
  - 74AC = FACT (–40 to +85°C)
  - 74ACT = TTL Compatible (–40 to +85°C)
- **XXX** — Function Type
- **YY** — Package Type
  - N for Plastic
  - D for Narrow SOIC
  - DW for Wide SOIC

SPECIAL LOGIC CIRCUITS

VVVV WWWWWW X YY ZZ

- **VVVV** — MC / MCCS
- **WWWWWW** — Function Type
- **X** — Option Suffix Indicator
- **YY** — Option Type
- **ZZ** — Package Type
  - N for Plastic
  - D for Narrow SOIC
  - FN for PLCC
  - FJ for CLCC

MECL III/HTL/DTL

MC XXXX Y

- **MC** — Motorola Circuit Identifier
- **XXXX** — Function Type
- **Y** — Package Type
  - P for Plastic
  - L for Ceramic
  - D for Narrow SOIC
  - FN for PLCC

Case Information

8-Pin Packages

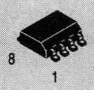

D SUFFIX
SOIC PACKAGE
CASE 751-03

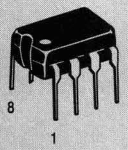

P SUFFIX
PLASTIC PACKAGE
CASE 626-04

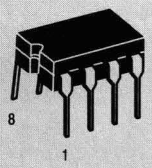

L SUFFIX
CERAMIC PACKAGE
CASE 693-03

14-Pin Packages

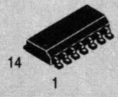

D SUFFIX
SOIC PACKAGE
CASE 751A-02

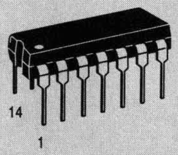

P,N SUFFIX
PLASTIC PACKAGE
CASE 646-06

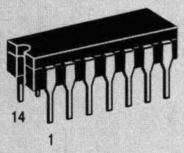

L,J SUFFIX
CERAMIC PACKAGE
CASE 632-08

16-Pin Packages

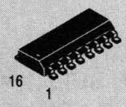

D SUFFIX
SOIC PACKAGE
CASE 751B-03

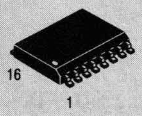

DW SUFFIX
SOIC PACKAGE
CASE 751G-01

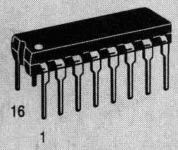

P,N SUFFIX
PLASTIC PACKAGE
CASE 648-08

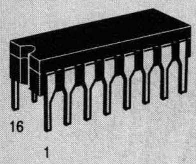

L,J SUFFIX
CERAMIC PACKAGE
CASE 620-09

Case Information (continued)

18-Pin Packages

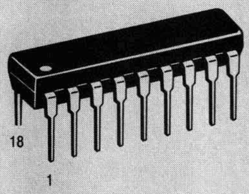

P,N SUFFIX
PLASTIC PACKAGE
CASE 707-02

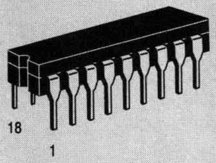

L,J SUFFIX
CERAMIC PACKAGE
CASE 726-04

20-Pin Packages

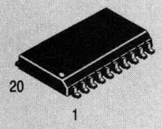

DW SUFFIX
SOIC PACKAGE
CASE 751D-03

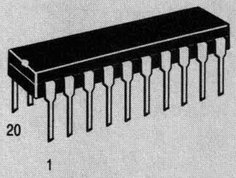

P,N SUFFIX
PLASTIC PACKAGE
CASE 738-03

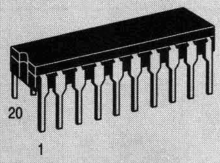

L,J SUFFIX
CERAMIC PACKAGE
CASE 732-03

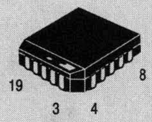

FN SUFFIX
PLASTIC LEADLESS
CHIP CARRIER (PLCC)
CASE 775-02

22-Pin Packages

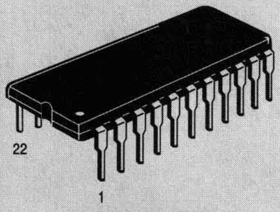

N SUFFIX
PLASTIC PACKAGE
CASE 708-04

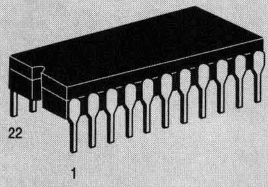

J SUFFIX
CERAMIC PACKAGE
CASE 736-05

Case Information (continued)

24-Pin Packages

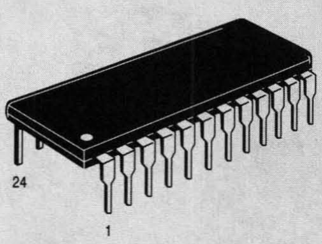

N SUFFIX
PLASTIC PACKAGE
CASE 709-02

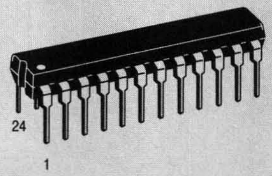

P,N SUFFIX
PLASTIC PACKAGE
CASE 724-03

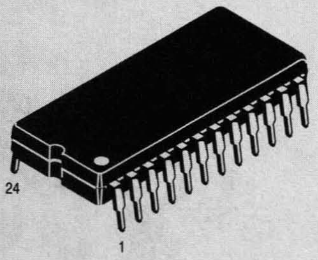

P,N SUFFIX
PLASTIC PACKAGE
CASE 649-03
(PW FOR 10H181 ONLY)

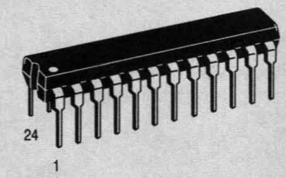

L,J SUFFIX
CERAMIC PACKAGE
CASE 758-01

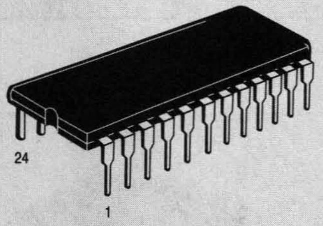

L,J SUFFIX
CERAMIC PACKAGE
CASE 623-05
(LW FOR 10H181 ONLY)

28-Pin Packages

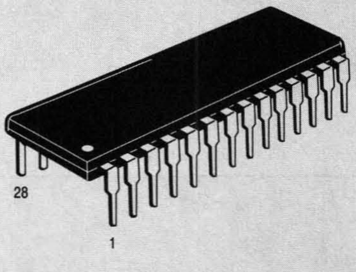

N SUFFIX
PLASTIC PACKAGE
CASE 710-02

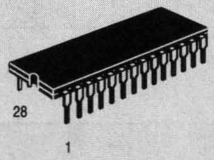

J SUFFIX
CERAMIC PACKAGE
CASE 733-04

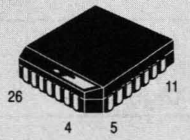

FN SUFFIX
PLASTIC LEADLESS
CHIP CARRIER (PLCC)
CASE 776-02

Case Information (continued)

40-Pin Packages

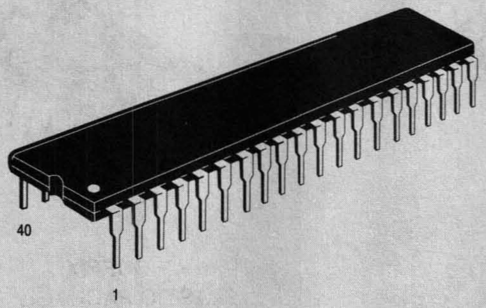

N SUFFIX
PLASTIC PACKAGE
CASE 711-03

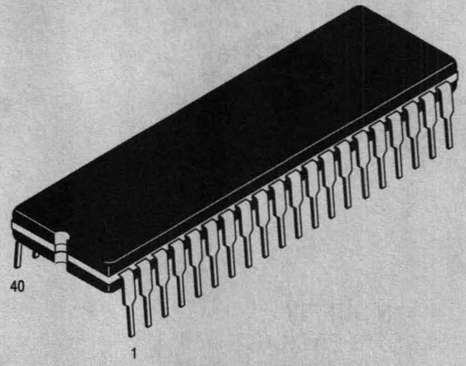

J SUFFIX
CERAMIC PACKAGE
CASE 734-04

48-Pin Package

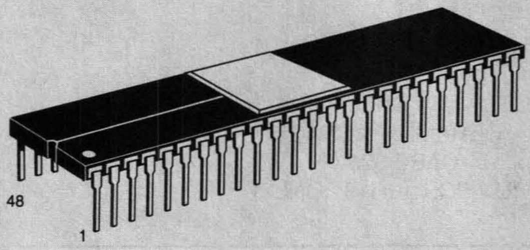

J SUFFIX
CERAMIC PACKAGE
CASE 740-03

52-Pin Package

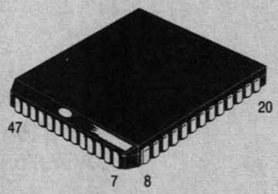

FJ SUFFIX
CERAMIC LEADLESS
CHIP CARRIER (CLCC)
CASE 778B-01

68-Pin Package

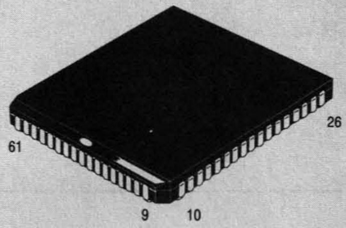

FN SUFFIX
PLASTIC LEADLESS
CHIP CARRIER (PLCC)
CASE 779-02

Packaging Information

Surface Mount

Why Surface Mount?

Surface Mount Technology is now being utilized to offer answers to many problems that have been created in the use of insertion technology.

Limitations have been reached with insertion packages and PC board technology. Surface Mount Technology offers the opportunity to continue to advance the State-of-the-Art designs that cannot be accomplished with Insertion Technology.

Surface Mount Packages allow more optimum device performance with the smaller Surface Mount configuration. Internal lead lengths, parasitic capacitance and inductance that placed limitations on chip performance have been reduced.

The lower profile of Surface Mount Packages allows more boards to be utilized in a given amount of space. They are stacked closer together and utilize less total volume than insertion populated PC boards.

Printed circuit costs are lowered with the reduction of the number of board layers required. The elimination or reduction of the number of plated through holes in the board, contributes significantly to lower PC board prices.

Automatic placement equipment is available that can place Surface Mount components at the rate of a few thousand per hour to hundreds of thousands of components per hour.

Surface Mount Technology is cost effective, allowing the manufacturer the opportunity to produce smaller units and/or offer increased functions with the same size product.

Surface Mount assembly does not require the preparation of components that are common on insertion technology lines. Surface Mount components are sent directly to the assembly line, eliminating an intermediate step.

For additional surface mount information, order Surface Mount Products Selector guide (SG127/D).

Pin Conversion Tables

Dual-in-Line Package to PLCC Pin Conversion Data

The following table gives the equivalent I/O pinouts of Dual-In-Line Package (DIP) configuration and Plastic Leaded Chip Carrier (PLCC) packages.

Conversion Tables

8 PIN DIP	1	2	3	4	5	6	7	8
20 PIN PLCC	2	5	7	10	12	15	17	20

14 PIN DIP	1	2	3	4	5	6	7	8	9	10	11	12	13	14
20 PIN PLCC	2	3	4	6	8	9	10	12	13	14	16	18	19	20

16 PIN DIP	1	2	3	4	5	6	7	8	9	10	11	12	13	14	15	16
20 PIN PLCC	2	3	4	5	7	8	9	10	12	13	14	15	17	18	19	20

20 PIN DIP	1	2	3	4	5	6	7	8	9	10	11	12	13	14	15	16	17	18	19	20
20 PIN PLCC	1	2	3	4	5	6	7	8	9	10	11	12	13	14	15	16	17	18	19	20

24 PIN DIP	1	2	3	4	5	6	7	8	9	10	11	12	13	14	15	16	17	18	19	20	21	22	23	24
28 PIN PLCC	2	3	4	5	6	7	9	10	11	12	13	14	16	17	18	19	20	21	23	24	25	26	27	28

Tape and Reel

Standard Bipolar Logic Integrated Circuits

Motorola has now added the convenience of Tape and Reel packaging for Motorola's growing family of standard Integrated Circuit products. The packaging fully conforms to the latest EIA RS-481A specification. The antistatic embossed tape provides a secure cavity sealed with a peel-back cover tape.

Mechanical Polarization

PLCC DEVICES

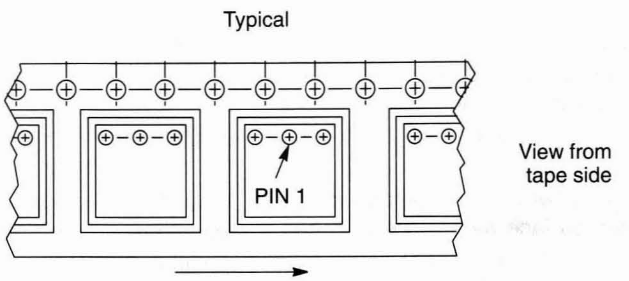

SOIC DEVICES

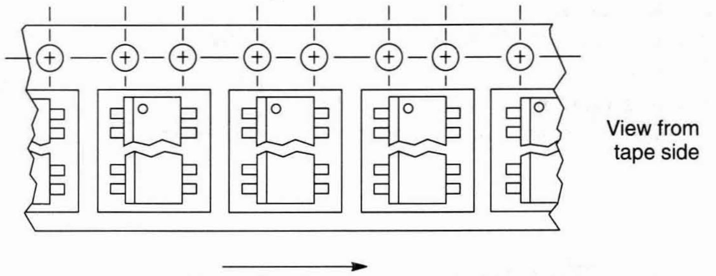

GENERAL INFORMATION

— Reel Size 13 inch (330 mm) Suffix: R2
— Units/Reel 500 to 5000 (see table)
— Tape Width 12 mm to 24 mm (see table)

ORDERING INFORMATION

To order devices which are to be delivered in Tape and Reel, add the suffix R2 to the device number being ordered.

Tape and Reel Data

Device Type	Tape Width (mm)	Device/Reel	Reel Size (inch)	Min Lot Size Per Part No. Tape and Reel
PLCC-20	16	1,000	13	3,000
PLCC-28	24	500	13	500
SO-8	12	2,500	13	5,000
SO-14	16	2,500	13	5,000
SO-16	16	2,500	13	5,000
SO-16 Wide	16	1,000	13	5,000
SO-20 Wide	24	1,000	13	5,000

Linear and Interface Integrated Circuits

In Brief . . .

Motorola linear and interface integrated circuits cover a much broader range of products than the traditional "op amps, regulators and consumer-image" associated with linear suppliers. Linear circuit technology currently influences the design and architecture of equipment for all major markets. As with other integrated circuit technologies, linear circuit design techniques and processes have been continually refined and updated to meet the needs of these diversified markets.

Operational amplifiers have utilized JFET inputs for improved performance, plus innovative design and trimming concepts have evolved for improved high performance and precision characteristics. In linear power ICs, basic voltage regulators have been refined to include higher current levels and more precise three-terminal fixed and adjustable voltages. The power area continues to expand into switching regulators, power supply control and supervisory circuits, and motor controllers.

Linear designs also offer a wide array of line drivers, receivers and transceivers for many of the EIA, European, IEEE and IBM interface standards. Peripheral drivers for a variety of devices are also offered. In addition to these key interface functions, a variety of magnetic and semiconductor memory read, write, sense and RAM control circuits are also available.

In data conversion, the original A-D and D-A converters have been augmented with high performance video speed and multiplying designs. Linear circuit technology has also provided precision low-voltage references for use in data conversion and other low temperature drift applications.

A host of special purpose linear devices have also been developed. These circuits find applications in telecom, radio, television, automotive, RF communications, and data transmission. These products have reduced the cost of RF communications, and have provided capabilities in telecommunications which make the telephone line convenient for both voice and data communications. Linear developments have also reduced the many discrete components formerly required for consumer functions to a few IC packages, and have made significant contributions to the rapidly growing market for electronics in automotive applications.

The table of contents provides a perspective of the many markets served by linear/interface ICs and of Motorola's involvement in these areas.

Page

Amplifiers and Comparators 4.1-1
Power Supply Circuits 4.2-1
Power/Motor Control Circuits 4.3-1
Voltage References 4.4-1
Data Conversion 4.5-1
Interface Circuits 4.6-1
Communication Circuits 4.7-1
Consumer Electronic Circuits 4.8-1
Automotive Electronic Circuits 4.9-1
Other Linear Circuits 4.10-1
Surface Mount Technology 4.11-1

Amplifiers and Comparators

In Brief . . .

For over two decades, Motorola has continually refined and updated integrated circuit technologies, analog circuit design techniques and processes in response to the needs of the marketplace. The enhanced performance of newer operational amplifiers and comparators has come through innovative application of these technologies, designs and processes. Some early designs are still available but are giving way to the new, higher performance operational amplifier and comparator circuits. Motorola has pioneered in JFET inputs, low temperature coefficient input stages, Miller loop compensation, all NPN output stages, dual-doublet frequency compensation and analog "in-the-package" trimming of resistors to produce superior high performance operational amplifiers and comparators, operating in many cases from a single supply with low input offset, low noise, low power, high output swing, high slew rate and high gain-bandwidth product at reasonable cost to the customer.

Present day operational amplifiers and comparators find application in all market segments including motor controls, instrumentation, aerospace, automotive, telecommunication, medical and consumer products.

Page

Operational Amplifiers 4.1-2
High Frequency Amplifiers 4.1-7
Miscellaneous Amplifiers 4.1-8
Comparators 4.1-9

Amplifiers and Comparators

Operational Amplifiers

Motorola offers a broad line of bipolar operational amplifiers to meet a wide range of applications. From low-cost industry-standard types to high precision circuits, the span encompasses a large range of performance capabilities. These linear integrated circuits are available as single, dual and quad monolithic devices in a variety of temperature ranges and package styles. Most devices may be obtained in unencapsulated "chip" form as well. For price and delivery information on chips, please contact your Motorola Sales Representative or Distributor.

Operational Amplifiers
- Single 4.1-2
- Dual 4.1-4
- Quad 4.1-5

High Frequency Amplifiers
- AGC 4.1-7

Miscellaneous Amplifiers
- Bipolar
  - Dual Operational Amplifier/Comparator 4.1-8
- CMOS
  - Quad Programmable Operational Amplifier 4.1-8
  - Dual Video Amplifiers 4.1-8
  - Dual Programmable Operational Amplifier/Dual Programmable Comparator 4.1-8

Comparators
- Single 4.1-9
- Dual 4.1-9
- Quad 4.1-9

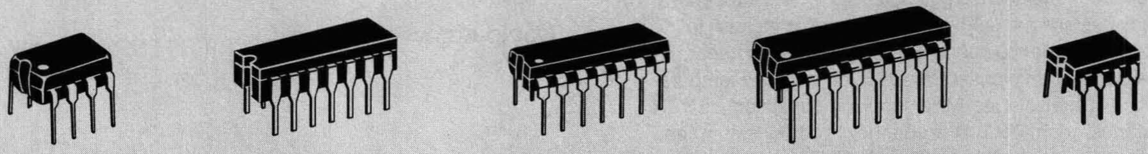

CASE 626
PLASTIC
N, P OR P1 SUFFIX

CASE 632
CERAMIC
J, L SUFFIX

CASE 646
PLASTIC
N, N-14, P OR P2 SUFFIX

CASE 648C
PLASTIC
P2 SUFFIX

CASE 693
CERAMIC
J OR J-8, U, JG SUFFIX

Single Operational Amplifiers

Device	I_{IB} (µA) Max	V_{IO} (mV) Max	TC_{VIO} (µV/°C) Typ	I_{IO} (nA) Max	A_{vol} (V/mV) Min	BW (A_V = 1) (MHz) Typ	SR (A_V = 1) (V/µs) Typ	Supply Voltage (V) Min	Supply Voltage (V) Max	Description	Suffix/Package
Noncompensated											
Commercial Temperature Range (0°C to +70°C)											
LM301A	0.25	7.5	10	50	25	1.0	0.5	±3.0	±18	General Purpose	N/626, J/693
LM308A	7.0	0.5	5.0	1.0	80	1.0	0.3	±3.0	±18	Precision	N/626
MC1748C	0.5	6.0	15	200	20	1.0	0.5	±3.0	±18	General Purpose	P1
Industrial Temperature Range (–25°C to +85°C)											
LM201A	0.075	2.0	10	10	50	1.0	0.5	±3.0	±22	General Purpose	N/626, J/693
Military Temperature Range (–55°C to +125°C)											
LM101A	0.075	2.0	10	10	50	1.0	0.5	±3.0	±22	General Purpose	J/693

Operational Amplifiers (continued)

Internally Compensated

Commercial Temperature Range (0°C to +70°C)

Device	I_{IB} (µA) Max	V_{IO} (mV) Max	TC_{VIO} (µV/°C) Typ	I_{IO} (nA) Max	A_{vol} (V/mV) Min	BW (A_V = 1) (MHz) Typ	SR (A_V = 1) (V/µs) Typ	Supply Voltage (V) Min	Supply Voltage (V) Max	Description	Suffix/Package
LF351	200 pA	10	10	100 pA	25	4.0	13	±5.0	±18	JFET Input	N/626
LF356	200 pA	10	5.0	50 pA	50	2.0	15	±5.0	±18	JFET Input	J/693
LF356B	100 pA	5.0	5.0	20 pA	50	5.0	12	±5.0	±22	JFET Input	J/693
LF357	200 pA	10	5.0	50 pA	50	3.0	75	±5.0	±18	Wideband FET Input	J/693
LF357B	100 pA	5.0	5.0	20 pA	50	20	50	±5.0	±22	JFET Input	J/693
LF441C	100 pA	5.0	10	50 pA	25	2.0	6.0	±5.0	±18	Low Power JFET Input	N/626
LM11C	100 pA	0.6	2.0	10 pA	250	1.0	0.3	±3.0	±20	Precision	N/626
LM11CL	200 pA	5.0	3.0	25 pA	50	1.0	0.3	±3.0	±20	Precision	N/626
LM307	0.25	7.5	10	50	25	1.0	0.5	±3.0	±18	General Purpose	N/626
MC1436	0.04	10	12	10	70	1.0	2.0	±15	±34	High Voltage	U
MC1741C	0.5	6.0	15	200	20	1.0	0.5	±3.0	±18	General Purpose	P1, U
MC1776C	0.003	6.0	15	3.0	100	1.0	0.2	±1.2	±18	µPower, Programmable	P1, U
MC3476	0.05	6.0	15	25	50	1.0	0.2	±1.5	±18	Low Cost µPower, Programmable	P1, U
MC34001	200 pA	10	10	100 pA	25	4.0	13	±5.0	±18	JFET Input	P/626, U
MC34001B	200 pA	5.0	10	100 pA	50	4.0	13	±5.0	±18	JFET Input	P/626, U
MC34071	0.5	5.0	10	75	25	4.5	10	+3.0	+44	High Performance,	P/626, U
MC34071A	500 nA	3.0	10	50	50	4.5	10	+3.0	+44	Single Supply	P/626, U
MC34080	200 pA	1.0	10	100 pA	25	16	55	±5.0	±22	Decompensated	P/626, U
MC34081	200 pA	1.0	10	100 pA	25	8.0	30	±5.0	±22	High Speed JFET Input	P/626, U
MC34181	0.1 nA	2.0	10	0.05	25	4.0	10	±2.5	±18	Low Power JFET Input	P/626
TL071AC	200 pA	6.0	10	50 pA	50	4.0	13	±5.0	±18	Low Noise JFET Input	P/626, JG
TL071C	200 pA	10	10	50 pA	25	4.0	13	±5.0	±18	Low Noise JFET Input	P/626, JG
TL081AC	200 pA	6.0	10	100 pA	50	4.0	13	±5.0	±18	JFET Input	P/626, JG
TL081C	400 pA	15	10	200 pA	25	4.0	13	±5.0	±18	JFET Input	P/626, JG

Automotive Temperature Range (–40°C to +85°C)

Device	I_{IB} (µA) Max	V_{IO} (mV) Max	TC_{VIO} (µV/°C) Typ	I_{IO} (nA) Max	A_{vol} (V/mV) Min	BW (A_V = 1) (MHz) Typ	SR (A_V = 1) (V/µs) Typ	Supply Voltage (V) Min	Supply Voltage (V) Max	Description	Suffix/Package
MC33071	0.5	5.0	10	75	25	4.5	10	+3.0	+44	High Performance,	P/626, U
MC33071A	500 nA	3.0	10	50	50	4.5	10	+3.0	+44	Single Supply	P/626, U
MC33171	0.1	4.5	10	20	50	1.8	2.1	+3.0	+44	Low Power Single Supply	P/626
MC33181	0.1 nA	2.0	10	0.05	25	4.0	10	±2.5	±18	Low Power JFET Input	P/626

Military Temperature Range (–55°C to +125°C)

Device	I_{IB} (µA) Max	V_{IO} (mV) Max	TC_{VIO} (µV/°C) Typ	I_{IO} (nA) Max	A_{vol} (V/mV) Min	BW (A_V = 1) (MHz) Typ	SR (A_V = 1) (V/µs) Typ	Supply Voltage (V) Min	Supply Voltage (V) Max	Description	Suffix/Package
MC1536	0.02	5.0	10	3.0	100	1.0	2.0	±15	±40	High Voltage	U
MC1741	0.5	5.0	15	200	50	1.0	0.5	±3.0	±22	General Purpose	U
MC1776	0.0075	5.0	15	3.0	200	1.0	0.2	±1.2	±18	µPower, Programmable	L
MC35001B	100 pA	5.0	10	50 pA	50	4.0	13	±5.0	±22	JFET Input	U
MC35071	0.5	5.0	10	75	25	4.5	10	+3.0	+44	High Performance,	U
MC35071A	500 nA	3.0	10	50	50	4.5	10	+3.0	+44	Single Supply	U
MC35080	200 pA	1.0	10	100 pA	25	16	55	±5.0	±22	Decompensated	U
MC35081	200 pA	1.0	10	100 pA	25	8.0	30	±5.0	±22	High Speed JFET Input	U
MC35171	0.1	4.5	10	20	50	1.8	2.1	+3.0	+44	Low Power Single Supply	U
TL081M	200 pA	6.0	10	100 pA	25	4.0	13	±5.0	±18	JFET Input	JG

Dual Operational Amplifiers

Internally Compensated

Commercial Temperature Range (0°C to +70°C)

Device	I_{IB} (µA) Max	V_{IO} (mV) Max	TC_{VIO} (µV/°C) Typ	I_{IO} (nA) Max	A_{vol} (V/mV) Min	BW (A_V = 1) (MHz) Typ	SR (A_V = 1) (V/µs) Typ	Supply Voltage (V) Min	Supply Voltage (V) Max	Description	Suffix/Package
LF353	200 pA	10	10	100 pA	25	4.0	13	±5.0	±18	JFET Input	N/626
LF422C	100 pA	5.0	10	50 pA	25	2.0	6.0	±5.0	±18	Low Power JFET Input	N/626
LM358	0.25	6.0	7.0	50	25	1.0	0.6	±1.5 +3.0	±18 +36	Single Supply, Low Power Consumption	N/626, J/693
LM833	1.0	5.0	2.0	200	31.6	15	7.0	±2.5	±18	Low Noise, Audio	N/626
MC1458	0.5	6.0	10	200	20	1.1	0.8	±3.0	±18	Dual MC1741	P1, U
MC1458C	0.7	10	10	300	20	1.1	0.8	±3.0	±18	General Purpose	P1
MC1747C	0.5	6.0	10	200	25	1.0	0.5	±3.0	±18	Dual MC1741	L, P2
MC3458	0.5	10	7.0	50	20	1.0	0.6	±1.5 +3.0	±18 +36	Split Supplies Single Supply Low Crossover Distortion	P1, U
MC4558AC	0.5	5.0	10	200	50	2.8	1.6	±3.0	±22	High Frequency	P1
MC4558C	0.5	6.0	10	200	20	2.8	1.6	±3.0	±18	High Frequency	P1, U
MC34002	100 pA	10	10	100 pA	25	4.0	13	±5.0	±18	JFET Input	P/626
MC34002B	100 pA	5.0	10	70 pA	25	4.0	13	±5.0	±18	JFET Input	P/626
MC34072	0.5	5.0	10	75	25	4.5	10	+3.0	+44	High Performance,	P/626, U
MC34072A	500 nA	3.0	10	50	50	4.5	10	+3.0	+44	Single Supply	P/626, U
MC34082	200 pA	3.0	10	100 pA	25	8.0	30	±5.0	±22	High Speed JFET Input	P/626
MC34083	200 pA	3.0	10	100 pA	25	16	55	±5.0	±22	Decompensated	P/626
MC34182	0.1 nA	3.0	10	0.05	25	4.0	10	±2.5	±18	Low Power JFET Input	P/626
TL062AC	200 pA	6.0	10	100 pA	4.0	2.0	6.0	±2.5	±18	Low Power JFET Input	P/626
TL062C	200 pA	15	10	200 pA	4.0	2.0	6.0	±2.5	±18	Low Power JFET Input	P/626
TL072AC	200 pA	6.0	10	50 pA	50	4.0	13	±5.0	±18	Low Noise JFET Input	P/626, JG/693
TL072C	200 pA	10	10	50 pA	25	4.0	13	±5.0	±18	Low Noise JFET Input	P/626, JG/693
TL082AC	200 pA	6.0	10	100 pA	50	4.0	13	±5.0	±18	JFET Input	P/626, JG/693
TL082C	400 pA	15	10	200 pA	25	4.0	13	±5.0	±18	JFET Input	P/626, JG/693

Industrial Temperature Range (–25°C to +85°C)

Device	I_{IB} (µA) Max	V_{IO} (mV) Max	TC_{VIO} (µV/°C) Typ	I_{IO} (nA) Max	A_{vol} (V/mV) Min	BW (A_V = 1) (MHz) Typ	SR (A_V = 1) (V/µs) Typ	Supply Voltage (V) Min	Supply Voltage (V) Max	Description	Suffix/Package
LM258	0.15	5.0	10	30	50	1.0	0.6	±1.5 +3.0	±18 +36	Split or Single Supply Op Amp	N/626, J/693

Automotive Temperature Range (–40°C to +85°C)

Device	I_{IB} (µA) Max	V_{IO} (mV) Max	TC_{VIO} (µV/°C) Typ	I_{IO} (nA) Max	A_{vol} (V/mV) Min	BW (A_V = 1) (MHz) Typ	SR (A_V = 1) (V/µs) Typ	Supply Voltage (V) Min	Supply Voltage (V) Max	Description	Suffix/Package
LM2904	0.25	7.0	7.0	50	100 typ	1.0	0.6	±1.5 +3.0	±13 +26	Split Supplies Single Supply	N/626, J/693
MC3358	5.0	8.0	10	75	20	1.0	0.6	±1.5 +3.0	±18 +36	Split Supplies Single Supply	P1/626
MC33072	0.50	5.0	10	75	25	4.5	10	+3.0	+44	High Performance,	P/626, U
MC33072A	500 nA	3.0	10	50	50	4.5	10	+3.0	+44	Single Supply	P/626, U
MC33076	0.5	4.0	2.0	70	25	7.4	2.6	±2.0	±18	High Output Current	P1/626 P2/648C
MC33077	1.0	1.0	2.0	180	150	37	11	±2.5	±18	Low Noise	P/626
MC33078	750 nA	2.0	2.0	150	31.6	16	7.0	±5.0	±18	Low Noise	N/626
MC33172	0.10	4.5	10	20	50	1.8	2.1	+3.0	+44	Low Power Single Supply	P/626
MC33178	0.5	3.0	2.0	50	50	5.0	2.0	±2.0	±18	High Output Current	P/626
MC33182	0.1 nA	3.0	10	0.05	25	4.0	10	±2.5	±18	Low Power JFET Input	P/626
MC33272	650 nA	1.0	0.56	25 nA	31.6	5.5	11.5	±1.5	±18	High Performance	P/626
MC33282	100 pA	200µV	5.0	50 pA	50	30	12	±2.5	±18	Low Input Offset JFET	P/646
TL062V	200 pA	6.0	10	100 pA	4.0	2.0	6.0	±2.5	±18	Low Power JFET Input	P/626

Operational Amplifiers (continued)

Device	I_{IB} (µA) Max	V_{IO} (mV) Max	TC_{VIO} (µV/°C) Typ	I_{IO} (nA) Max	A_{vol} (V/mV) Min	BW (A_V = 1) (MHz) Typ	SR (A_V = 1) (V/µs) Typ	Supply Voltage (V) Min	Supply Voltage (V) Max	Description	Suffix/ Package
Military Temperature Range (–55°C to +125°C)											
LM158	0.15	5.0	10	30	50	1.0	0.6	±1.5	±18	Split Supplies	J/693
								+3.0	+36	Single Supply	
										Low Power Consumption	
MC1558	0.5	5.0	10	200	50	1.1	0.8	±3.0	±22	Dual MC1741	U
MC1747	0.5	5.0	10	200	50	1.0	0.5	±3.0	±22	Dual MC1741	L
MC3558	0.5	5.0	10	50	50	1.0	0.6	±1.5	±18	Split Supplies	U
								+3.0	+36	Single Supply	
MC4558	0.5	5.0	10	200	50	2.8	1.6	±3.0	±22	High Frequency	U
MC35002	100 pA	10	10	100 pA	25	4.0	13	±5.0	±22	JFET Input	U
MC35002B	100 pA	5.0	10	50 pA	50	4.0	13	±5.0	±22	JFET Input	U
MC35072	0.5	5.0	10	75	25	4.5	10	+3.0	+44	High Performance,	U
MC35072A	500 nA	3.0	10	50	50	4.5	10	+3.0	+44	Single Supply	U
MC35172	0.1	4.5	10	20	50	1.8	2.1	+3.0	+44	Low Power Single Supply	U
TL062M	200 pA	6.0	10	100 pA	4.0	2.0	6.0	±2.5	±18	Low Power JFET Input	JG
TL072M	200 pA	6.0	10	50 pA	35	4.0	13	±5.0	±18	Low Noise JFET Input	JG
TL082M	200 pA	6.0	10	100 pA	25	4.0	13	±5.0	±18	JFET Input	JG

Quad Operational Amplifiers

Device	I_{IB} (µA) Max	V_{IO} (mV) Max	TC_{VIO} (µV/°C) Typ	I_{IO} (nA) Max	A_{vol} (V/mV) Min	BW (A_V = 1) (MHz) Typ	SR (A_V = 1) (V/µs) Typ	Supply Voltage (V) Min	Supply Voltage (V) Max	Description	Suffix/ Package
Internally Compensated											
Commercial Temperature Range (0°C to +70°C)											
LF347	200 pA	10	10	100 pA	25	4.0	13	±5.0	±18	JFET Input	N/646
LF347B	200 pA	5.0	10	100 pA	50	4.0	13	±5.0	±18	JFET Input	N/646
LF444C	100 pA	10	10	50 pA	25	2.0	6.0	±5.0	±18	Low Power JFET Input	N/646
LM324	0.25	6.0	7.0	50	25	1.0	0.6	±1.5	±16	Low Power	J/632, N/646
								+3.0	+32	Consumption	
LM348	0.2	6.0	—	50	25	1.0	0.5	±3.0	±18	Quad MC1741	J/632, N/646
MC3401/	0.3	—	—	—	1.0	5.0	0.6	±1.5	±18	Norton Input	J/632, N/646
LM3900								+3.0	+36		
MC3403	0.5	10	7.0	50	20	1.0	0.6	±1.5	±18	No Crossover	L, P/646
								+3.0	+36	Distortion	
MC4741C	0.5	6.0	15	200	20	1.0	0.5	±3.0	±18	Quad MC1741	L, P/646
MC34004	200 pA	10	10	100 pA	25	4.0	13	±5.0	±18	JFET Input	L, P/646
MC34004B	200 pA	5.0	10	100 pA	50	4.0	13	±5.0	±18	JFET Input	L, P/646
MC34074	0.5	5.0	10	75	25	4.5	10	+3.0	+44	High Performance,	L, P/646
MC34074A	500 nA	3.0	10	50	50	4.5	10	+3.0	+44	Single Supply	L, P/646
MC34084	200 pA	12	10	100 pA	25	8.0	30	±5.0	±22	High Speed JFET Input	P/646
MC34085	200 pA	12	10	100 pA	25	16	55	±5.0	±22	Decompensated	P/646
MC34184	0.1 nA	10	10	0.05	25	4.0	10	±2.5	±18	Low Power JFET Input	P/646
TL064AC	200 pA	6.0	10	100 pA	4.0	2.0	6.0	±2.5	±18	Low Power JFET Input	N/646
TL064C	200 pA	15	10	200 pA	4.0	2.0	6.0	±2.5	±18	Low Power JFET Input	N/646
TL074AC	200 pA	6.0	10	50 pA	50	4.0	13	±5.0	±18	Low Noise JFET Input	J/632, N/646
TL074C	200 pA	10	10	50 pA	25	4.0	13	±5.0	±18	Low Noise JFET Input	J/632, N/646
TL084AC	200 pA	6.0	10	100 pA	50	4.0	13	±5.0	±18	JFET Input	J/632, N/646
TL084C	400 pA	15	10	200 pA	25	4.0	13	±5.0	±18	JFET Input	J/632, N/646

Operational Amplifiers (continued)

Device	I_{IB} (µA) Max	V_{IO} (mV) Max	TC_{VIO} (µV/°C) Typ	I_{IO} (nA) Max	A_{vol} (V/mV) Min	BW (A_V = 1) (MHz) Typ	SR (A_V = 1) (V/µs) Typ	Supply Voltage (V) Min	Supply Voltage (V) Max	Description	Suffix/ Package
Industrial Temperature Range (–25°C to +85°C)											
LM224	0.15	5.0	7.0	30	50	1.0	0.6	±1.5 +3.0	±16 +32	Split Supplies Single Supply	J/632, N/646
LM248	0.2	6.0	—	50	25	1.0	0.5	±3.0	±18	Quad MC1741	J/632, N/646
Automotive Temperature Range (–40°C to +85°C)											
MC3301/ LM2900	0.3	—	—	—	1.0	4.0	0.6	±2.0 +4.0	±15 +28	Norton Input	P/646 N/646
LM2902	0.5	10	—	50	—	1.0	0.6	±1.5 +3.0	±13 +26	Differential Low Power	J/632, N/646
MC3303	0.5	8.0	10	75	20	1.0	0.6	±1.5 +3.0	±18 +36	Differential General Purpose	P/646
MC33074	0.5	4.5	10	75	25	4.5	10	+3.0	+44	High Performance, Single Supply	L, P/646
MC33074A	500 nA	3.0	10	50	50	4.5	10	+3.0	+44	High Performance	L, P/646
MC33079	750 nA	2.5	2.0	150	31.6	9.0	7.0	±5.0	±18	Low Noise	N/646
MC33174	0.1	4.5	10	20	50	1.8	2.1	+3.0	+44	Low Power Single Supply	P/646
MC33179	0.5	3.0	2.0	50	50	5.0	2.0	±2.0	±18	High Output Current	P/646
MC33184	0.1 nA	10	10	0.05	25	4.0	10	±2.5	±18	Low Power JFET Input	P/646
MC33274	650 nA	1.0	0.56	25 nA	31.6	5.5	11.5	±1.5	±18	High Performance	P/646
MC33284	100 pA	2.0	5.0	50 pA	50	30	12	±2.5	±18	Low Input Offset JFET	P/646
TL064V	200 pA	9.0	10	100 pA	4.0	2.0	6.0	±2.5	±18	Low Power JFET Input	N/646
Telecommunications Temperature Range (–40°C to +85°C)											
MC143403	1.0 nA	30	—	200 pA	45 dB	0.8	1.5	4.75	12.6	CMOS Low Power, Drives Low-Impedance Loads	L, P/646
MC143404	1.0 nA	30	—	200 pA	60 dB	0.8	1.0	4.75	12.6	CMOS Very Low Power	L, P/646
Military Temperature Range (–55°C to +125°C)											
LM124	0.15	5.0	7.0	30	50	1.0	0.6	±1.5 +3.0	±16 +32	Low Power Consumption	J/632, N/646
MC3503	0.5	5.0	7.0	50	50	1.0	0.6	±1.5 +3.0	±18 +36	General Purpose, Low Power	L, P/646
MC4741	0.5	5.0	15	200	50	1.0	0.5	±3.0	±22	Quad MC1741	L
MC35004	100 pA	10	10	100 pA	25	4.0	13	±5.0	±22	JFET Input	L
MC35004B	100 pA	5.0	10	50 pA	50	4.0	13	±5.0	±22	JFET Input	L
MC35074	0.5	5.0	10	75	25	4.5	10	+3.0	+44	High Performance, Single Supply	L
MC35074A	500 nA	3.0	10	50	50	4.5	10	+3.0	+44	High Performance	L
MC35084	200 pA	12	10	100 pA	25	8.0	30	±5.0	±22	High Speed JFET Input	L
MC35085	200 pA	12	10	100 pA	25	16	55	±5.0	±22	Decompensated	L
MC35174	0.1	4.5	10	20	50	1.8	2.1	+3.0	+44	Low Power, Single Supply	L
TL064M	200 pA	9.0	10	100 pA	4.0	2.0	6.0	±2.5	±18	Low Power JFET Input	J/632
TL074M	200 pA	9.0	10	50 pA	35	4.0	13	±5.0	±18	Low Noise JFET Input	J/632
TL084M	200 pA	9.0	10	100 pA	25	4.0	13	±5.0	±18	JFET Input	J/632

High Frequency Amplifiers

A variety of high frequency circuits with features ranging from low cost simplicity to multi-function versatility marks Motorola's line of integrated amplifiers. Devices described here are intended for industrial and communications applications. For devices especially dedicated to consumer products, i.e., TV and entertainment radio, see the "Consumer Electronics" section.

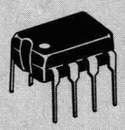

CASE 626
PLASTIC
P SUFFIX

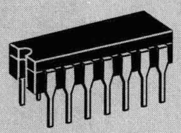

CASE 632
CERAMIC
F, L SUFFIX

CASE 751
PLASTIC
D SUFFIX

AGC Amplifiers

MC1490P/MC1350P Family Wideband General Purpose Amplifiers

The MC1490 and MC1350 family are basic building blocks — AGC (Automatic Gain Controlled) RF/Video Amplifiers. These parts are recommended for applications up through 70 MHz. The best high frequency performance may be obtained by using the physically smaller SOIC version (shorter leads) — MC1350D. There are currently no other RF ICs like these, because other manufacturers have dropped their copies. Applications include variable gain video and instrumentation amplifiers, IF (Intermediate Frequency) amplifiers for radio and TV receivers, and transmitter power output control. Many uses will be found in medical instrumentation, remote monitoring, video/graphics processing, and a variety of communications equipment. The family of parts using the same basic die (identical circuit with slightly different test parameters) is listed in the following table.

MC1545/1445 Gated 2-Channel Input

Differential input and output amplifier with gated 2-channel input provides for a wide variety of switching purposes. Typical 50 MHz bandwidth makes it suitable for high frequency applications such as video switching, FSK circuits, multiplexers, etc. Gating circuit is useful for AGC control.

High-Frequency Amplifier Specifications

Operating Temperature Range			A_V (dB)	Bandwidth @ MHz	V_{CC}/V_{EE} (Vdc)		Suffix/ Package
–55° to +125°C	–40° to +85°C	0° to +70°C	Typ		Min	Max	
—	—	MC1350	50 50	45 45	+ 6.0	+ 18	P/626, D/751
—	MC1490	—	50 35	10 100	+ 6.0	+ 18	P/626
MC1545	—	MC1445	19	50	± 4.0	± 12	L/632

Miscellaneous Amplifiers

Motorola provides several Bipolar and CMOS special purpose amplifiers which fill specific needs. These devices range from low power CMOS programmable amplifiers and comparators to variable-gain bipolar power amplifiers.

CASE 632
CERAMIC
L SUFFIX

CASE 646
PLASTIC
P SUFFIX

CASE 648
PLASTIC
P SUFFIX

CASE 751B
PLASTIC
D SUFFIX

Bipolar

MC3405/MC3505 Dual Operational Amplifier and Dual Voltage Comparator

This device contains two Differential Input Operational Amplifiers and two Comparators; each set capable of single supply operation. This operational amplifier-comparator circuit will find its applications as a general purpose product for automotive circuits and as an industrial "building block."

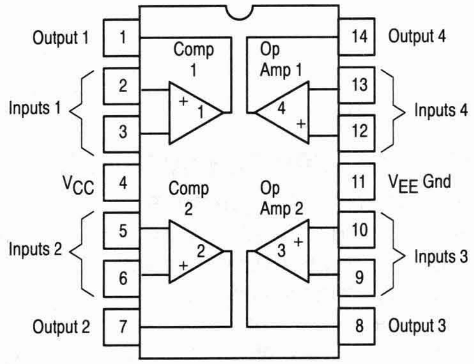

Device	I_{IB} (µA) Max	V_{IO} (mV) Max	I_{IO} (nA) Max	A_{vol} (V/mV) Min	Response (µs) Typ	Supply Voltage		Suffix/ Package
						Single	Dual	
MC3405	0.5	10	50	20	1.3	3.0 to 36	± 1.5 to ± 18	L/632, P/646
MC3505		5.0						L/632

CMOS

MC14573 Quad Programmable Operational Amplifier
MC14576B/MC14577B Dual Video Amplifiers
MC14575 Dual Programmable Operational Amplifier and Dual Programmable Comparator

Function	Quantity Per Package	Single Supply Voltage Range	Dual Supply Voltage Range	Frequency Range	Device Number	Suffix/ Package
Operational Amplifiers	4	3 to 15 V	± 1.5 to ± 7.5 V	DC to 1 MHz	**MC14573**	D/751B,P/648
Video Amplifiers	2	5 to 12 V*	± 2.5 to ± 6 V♦	Up to 10 MHz	**MC14576B MC14577B**	P/626,F/TBD**
Operational Amplifiers and Comparators	2 and 2	3 to 15 V	± 1.5 to ± 7.5 V	DC to 1 MHz	**MC14575**	D/751B, P/648

*5 to 10 V for surface mount package
♦± 2.5 to ± 5 V for surface mount package
**To Be Determined

Comparators

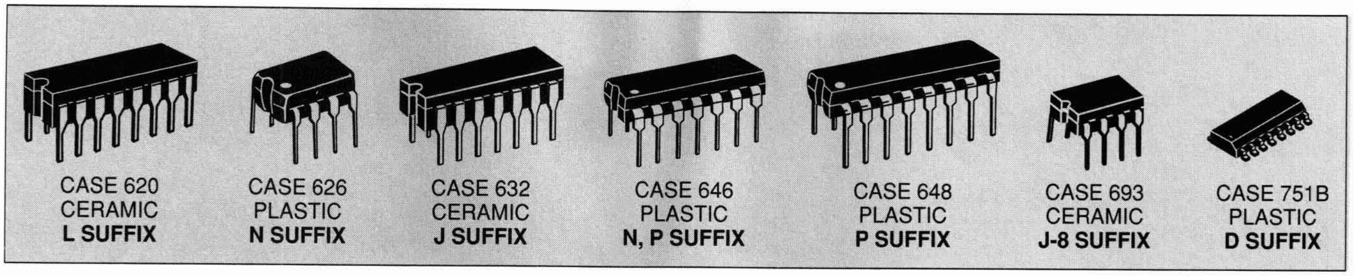

Device	I_{IB} (µA) Max	V_{IO} (mV) Max	I_{IO} (µA) Max	A_V (V/V) Typ	I_{IO} (mA) Min	Response Time (ns)	Supply Voltage (V)	Description	Temperature Range (°C)	Suffix/ Package

Single

BIPOLAR

Device	I_{IB} (µA) Max	V_{IO} (mV) Max	I_{IO} (µA) Max	A_V (V/V) Typ	I_{IO} (mA) Min	Response Time (ns)	Supply Voltage (V)	Description	Temperature Range (°C)	Suffix/ Package
LM111	0.1	3.0	0.01	200 k	8.0	200	+ 15, – 15	With strobe, will operate from single supply	– 55 to + 125	J-8
LM211	0.1	3.0	0.01	200 k	8.0	200	+ 15, – 15		– 25 to + 85	J-8
LM311	0.25	7.5	0.05	200 k	8.0	200	+ 15, – 15		0 to + 70	N/626, J-8

CMOS

Device	I_{IB} (µA) Max	V_{IO} (mV) Max	I_{IO} (µA) Max	A_V (V/V) Typ	I_{IO} (mA) Min	Response Time (ns)	Supply Voltage (V)	Description	Temperature Range (°C)	Suffix/ Package
MC14578	1.0 pA	50	—	—	1.1	—	3.5 to 14	Requires only 10 µA from single-ended supply	– 30 to + 70	P/648 D/751B

Dual

BIPOLAR

Device	I_{IB} (µA) Max	V_{IO} (mV) Max	I_{IO} (µA) Max	A_V (V/V) Typ	I_{IO} (mA) Min	Response Time (ns)	Supply Voltage (V)	Description	Temperature Range (°C)	Suffix/ Package
LM393	0.25	5.0	0.05	200 k	6.0	1300	± 1.5 to ± 18 or 3.0 to 36	Designed for single or split supply operation, input common mode includes ground (negative supply)	0 to + 70	N/626
LM393A	0.25	2.0	0.05	200 k	6.0	1300			0 to + 70	N/626
LM2903	0.25	7.0	0.05	200 k	6.0	1500			– 40 to + 85	N/626
MC3405	0.5	10	0.05	200 k	6.0	1300	± 1.5 to ± 7.5 or 3.0 to 15	This device contains 2 op amps and 2 comparators in a single package	0 to + 70	L, P/646
MC3505	0.5	5.0	0.05	200 k	6.0	1300			– 55 to + 125	L

CMOS

Device	I_{IB} (µA) Max	V_{IO} (mV) Max	I_{IO} (µA) Max	A_V (V/V) Typ	I_{IO} (mA) Min	Response Time (ns)	Supply Voltage (V)	Description	Temperature Range (°C)	Suffix/ Package
MC14575	0.001	30	0.0001	20 k	3.0	1000	± 1.5 to ± 7.5 or 3.0 to 15	This device contains 2 op amps and 2 comparators in a single package	– 40 to + 85	P/648 D/751B

Quad

BIPOLAR

Device	I_{IB} (µA) Max	V_{IO} (mV) Max	I_{IO} (µA) Max	A_V (V/V) Typ	I_{IO} (mA) Min	Response Time (ns)	Supply Voltage (V)	Description	Temperature Range (°C)	Suffix/ Package
LM139	0.1	5.0	0.025	200 k	6.0	1300	± 1.5 to ± 18 or 3.0 to 36	Designed for single or split supply operation, input common mode includes ground (negative supply)	– 55 to + 125	J
LM139A	0.1	2.0	0.025	200 k	6.0	1300			– 55 to + 125	J
LM239	0.25	5.0	0.05	200 k	6.0	1300			– 25 to + 85	J, N/646
LM239A	0.25	2.0	0.05	200 k	6.0	1300			– 25 to + 85	J, N/646
LM339	0.25	5.0	0.05	200 k	6.0	1300			0 to + 70	J, N/646
LM339A	0.25	2.0	0.05	200 k	6.0	1300			0 to + 70	J, N/646
LM2901	0.25	7.0	0.05	100 k	6.0	1300			– 40 to + 85	N/646
MC3302	0.5	20	0.5	30 k	6.0	1300			– 40 to + 85	P/646
MC3430	40	6.0	1.0 Typ	1.2 k	16	33	+ 5.0, – 5.0	High speed comparator/ sense-amplifier	0 to + 70	L, P/648
MC3431	40	10	1.0 Typ	1.2 k	16	33	+ 5.0, – 5.0		0 to + 70	L, P/648
MC3432	40	6.0	1.0 Typ	1.2 k	16	40	+ 5.0, – 5.0		0 to + 70	L, P/648
MC3433	40	10	1.0 Typ	1.2 k	16	40	+ 5.0, – 5.0		0 to + 70	L, P/648

CMOS

Device	I_{IB} (µA) Max	V_{IO} (mV) Max	I_{IO} (µA) Max	A_V (V/V) Typ	I_{IO} (mA) Min	Response Time (ns)	Supply Voltage (V)	Description	Temperature Range (°C)	Suffix/ Package
MC14574	0.001	30	0.0001	20 k	3.0	1000	± 1.5 to ± 7.5 or 3.0 to 15	Externally programmable power dissipation with 1 or 2 resistors	– 40 to + 85	P/648 D/751B

Power Supply Circuits

In Brief . . .

In most electronic systems some form of voltage regulation is required. In the past, the task of voltage regulator design was tediously accomplished with discrete devices, and the results were quite often complex and costly. Today, with bipolar monolithic regulators, this task has been significantly simplified. The designer now has a wide choice of fixed, low V_{diff}, adjustable, and tracking series-type voltage regulators. These devices incorporate many built-in protection features, making them virtually immune to the catastrophic failures encountered in older discrete designs.

The Switching Power Supply continues to increase in popularity and is one of the fastest growing markets in the world of power conversion. They offer the designer several important advantages over linear series-pass regulators. These advantages include significant advancements in the areas of size and weight reduction, improved efficiency, and the ability to perform voltage step-up, step-down, and voltage-inverting functions. Motorola offers a diverse portfolio of full featured switching regulator control circuits which meet the needs of today's modern compact electronic equipment.

Power supplies, MPU/MCU-based systems, industrial controls, computer systems and many other product applications are requiring power supervisory functions which monitor voltages to ensure proper system operation. Motorola offers a wide range of power supervisory circuits that fulfill these needs in a cost effective and efficient manner. MOSFET drivers are also provided to enhance the drive capabilities of first generation switching regulators or systems designed with CMOS/TTL logic devices. These drivers can also be used in DC-to-DC converters, motor controllers or virtually any other application requiring high speed operation of power MOSFETs.

	Page
Linear Voltage Regulators	4.2-2
Special Regulators	4.2-5
Switching Regulator Control Circuits	4.2-6
Special Switching Regulator Controllers	4.2-9
Power Supervisory Circuits	4.2-10
MOSFET Drivers	4.2-13

Power Supply Circuits

Linear Voltage Regulators

Fixed Output

These low cost monolithic circuits provide positive and/or negative regulation at currents from 100 mA to 3.0 A. They are ideal for on-card regulation employing current limiting and thermal shutdown. Low V_{diff} devices are offered for battery powered systems.

Although designed primarily as fixed voltage regulators, these devices can be used with external components to obtain adjustable voltages and currents.

Linear Voltage Regulators
- Fixed Output 4.2-2
- Adjustable Output 4.2-4

Special Regulators 4.2-5
Switching Regulator Control Circuits
- Single-Ended 4.2-6
- Double-Ended 4.2-8

Special Switching Regulator Controllers
- Dual Channel Current Mode 4.2-9
- Universal Microprocessor 4.2-9

Power Supervisory Circuits
- Overvoltage "Crowbar" Sensing 4.2-10
- Over/Undervoltage Protection 4.2-10
- Undervoltage Sensing 4.2-11
- Microprocessor Voltage Regulator and Supervisory ... 4.2-12
- Universal Voltage Monitor 4.2-12

MOSFET Drivers 4.2-13

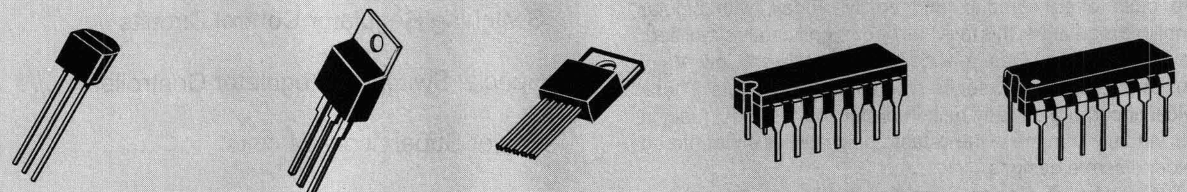

CASE 29 PLASTIC **P, Z SUFFIX** — CASE 221A PLASTIC POWER **T, KC SUFFIX** — CASE 314D PLASTIC **T SUFFIX** — CASE 632 CERAMIC **CL, L SUFFIX** — CASE 646 PLASTIC **CP SUFFIX**

Fixed-Voltage, 3-Terminal Regulators for Positive or Negative Polarity Power Supplies

V_{out} (V)	Tol.* (V)	I_O (mA) Max	Output Device		V_{in} Min/Max	Reg_{line} (mV)	Reg_{load} (mV)	$\Delta V_O/\Delta T$ (mV/°C) Typ	Suffix/ Package
			Positive	Negative					
5.0	±0.5	100	LM2931-5.0	—	5.6/40	30	50	1.0	Z,T
			MC78L05C	MC79L05C	6.7/30	200	60		P
	±0.25		LM2931A-5.0	—	5.6/40	30	50		Z, T
			MC78L05AC	MC79L05AC, AB	6.7/30	150	60		P, D
		500	MC78M05C	MC79M05C	7.0/35	100	100		DT, T
	±0.5	750, 10	LM2935	—	5.6/26	30	50		T/314D
	±0.25	1500	MC7805B#	—	8.0/35	100	100	1.0	T
			MC7805C	MC7905C	7.0/35				
	±0.2		MC7805AC	MC7905AC	7.5/35	10		0.6	
	±0.25		LM340-5	—	7.0/35	50	50		
	±0.2		LM340A-5	—		10	25		
	±0.1		TL780-05C	—		5.0		0.06	KC
	±0.25	3000	MC78T05C	—	7.3/35	25	30	0.1	T
	±0.2		MC78T05AC	—		10	25		
	±0.25		LM323	—	7.5/20	25	100		
	±0.2		LM323A	—		15	50		
5.2	±0.26	1500	—	MC7905.2C	7.2/35	105	105	1.0	T

#T_J = –40° to +125°C

*Output Voltage Tolerance for Worst Case

Fixed Output Voltage Regulators

V_{out} (V)	Tol.* (V)	I_O (mA) Max	Output Device Positive	Output Device Negative	V_{in} Min/Max	Reg_{line} (mV)	Reg_{load} (mV)	$\Delta V_O/\Delta T$ (mV/°C) Typ	Suffix/ Package
6.0	± 0.3	500	MC78M06C	—	8.0/35	100	120	1.0	T
		1500	MC7806B#	—	9.0/35	120		0.7	
			MC7806C	MC7906C	8.0/35				
	± 0.24		MC7806AC	—	8.6/35	11	100		
	± 0.3		LM340-6	—	8.0/35	60	60		
8.0	± 0.8	100	MC78L08C	—	9.7/30	200	80	—	P
			MC78L08AC	—		175			
	± 0.4	500	MC78M08C	—	10/35	100	160	1.0	DT, T
		1500	MC7808B#	—	11.5/35	160			T
			MC7808C	MC7908C	10.5/35				
	± 0.3		MC7808AC	—	10.6/35	13	100		
	± 0.4		LM340-8	—	10.5/35	80	80		
		3000	MC78T08C	—	10.4/35	35	30	0.16	
9.0	± 0.39	1500	MC7809C	—	11.5/35	50	50	1.0	T
12	± 1.2	100	MC78L12C	MC79L12C	13.7/35	250	100	—	P, D
	± 0.6		MC78L12AC	MC79L12AC, AB					
		500	MC78M12C	MC79M12C	14/35	100	240	1.0	DT, T
		1500	MC7812B#	—	15.5/35	240		1.5	T
			MC7812C	MC7912C	14.5/35				
	± 0.5		MC7812AC	—	14.8/35	18	100		
	± 0.6		LM340-12	—	14.5/35	120	120		
	± 0.5		LM340A-12	—		18	32		
	± 0.24		TL780-12C	—		5.0		0.15	KC
	± 0.6	3000	MC78T12C	—		45	30	0.24	T
	± 0.5		MC78T12AC	—		18	25		
15	± 1.5	100	MC78L15C	MC79L15C	16.7/35	300	150	—	P, D
	± 0.75		MC78L15AC	MC79L15AC, AB					
		500	MC78M15C	MC79M15C	17/35	100	300	1.0	DT, T
		1500	MC7815B#	—	18.5/35	300		1.8	T
			MC7815C	MC7915C	17.5/35				
	± 0.6		MC7815AC	—	17.9/35	22	100		
	± 0.75		LM340-15	—	17.5/35	150	150		
	± 0.6		LM340A-15	—		22	35		
	± 0.3		TL780-15C	—		15	60	0.18	KC
	± 0.75	3000	MC78T15C	—	17.5/40	55	30	0.3	T
	± 0.6		MC78T15AC	—		22	25		
18	± 1.8	100	MC78L18C	MC79L18C	19.7/35	325	170	—	P
	± 0.9		MC78L18AC	MC79L18AC					
		500	MC78M18C	—	20/35	100	360	1.0	T
		1500	MC7818B#	—	22/35	360		2.3	
	± 0.7		MC7818C	MC7918C	21/35				
			MC7818AC	—		31	100		
	± 0.9		LM340-18	—		180	180		

#T_J = –40° to +125°C

*Output Voltage Tolerance for Worst Case

(continued)

Fixed Output Voltage Regulators (continued)

V_{out} (V)	Tol.* (V)	I_O (mA) Max	Output Device Positive	Output Device Negative	V_{in} Min/Max	Reg_{line} (mV)	Reg_{load} (mV)	$\Delta V_O/\Delta T$ (mV/°C) Typ	Suffix/ Package
20	± 1.0	500	MC78M20C	—	22/40	10	400	1.1	T
24	± 2.4	100	MC78L24C	MC79L24C	25.7/40	350	200	—	P
	± 1.2		MC78L24AC	MC79L24AC		300			
		500	MC78M24C	—	26/40	100	480	1.2	T
		1500	MC7824B#	—	28/40	480		3.0	
			MC7824C	MC7924C	27/40				
	± 1.0		MC7824AC	—	27.3/40	36	100		
	± 1.2		LM340-24	—		240	240		

#T_J = –40° to +125°C

*Output Voltage Tolerance for Worst Case

Adjustable Output

Motorola offers a broad line of adjustable output voltage regulators with a variety of output current capabilities. Adjustable voltage regulators provide users the capability of stocking a single integrated circuit offering a wide range of output voltages for industrial and communications applications. The three-terminal devices require only two external resistors to set the output voltage.

Adjustable Positive Output Regulators

I_O (mA) Max	Device	V_{out} (V) Min	V_{out} (V) Max	V_{in} (V) Min	V_{in} (V) Max	$V_{in} - V_{out}$ Differential (V) Min	P_D (W) Max T_A = 25°C	P_D (W) Max T_C = 25°C	Regulation % V_{out} @ T_A = 25°C Max Line	Regulation Load	T_C V_{out} Typ (%/°C)	T_J (°C) Max	Suffix/ Package
100	LM317L	1.2	37	5.0	40	3.0	Internally Limited		0.04	0.5	0.006	125	Z
	LM2931C	3.0	24	3.16		0.6			0.15	1.0	—		T/314D
150	MC1723	2.0	37	9.5		3.0	1.25	—	0.1	0.3	0.003	150	CP
							1.5	—				175	CL
								—			0.002		L
500	LM317M	1.2		5.0			Internally Limited		0.04	0.5	0.0056	125	T
1500	LM317										0.006		
3000	LM350		33		36				0.03		0.008		

Adjustable Negative Output Regulators

I_O (mA) Max	Device	V_{out} (V) Min	V_{out} (V) Max	V_{in} (V) Min	V_{in} (V) Max	$V_{in} - V_{out}$ Differential (V) Min	P_D (W) Max T_A = 25°C	P_D (W) Max T_C = 25°C	Regulation % V_{out} @ T_A = 25°C Max Line	Regulation Load	T_C V_{out} Typ (%/°C)	T_J (°C) Max	Suffix/ Package
500	LM337M	–1.2	–37	5.0	4.0	3.0	Internally Limited		0.04	1.0	0.0048	125	T
1500	LM337												

Special Regulators

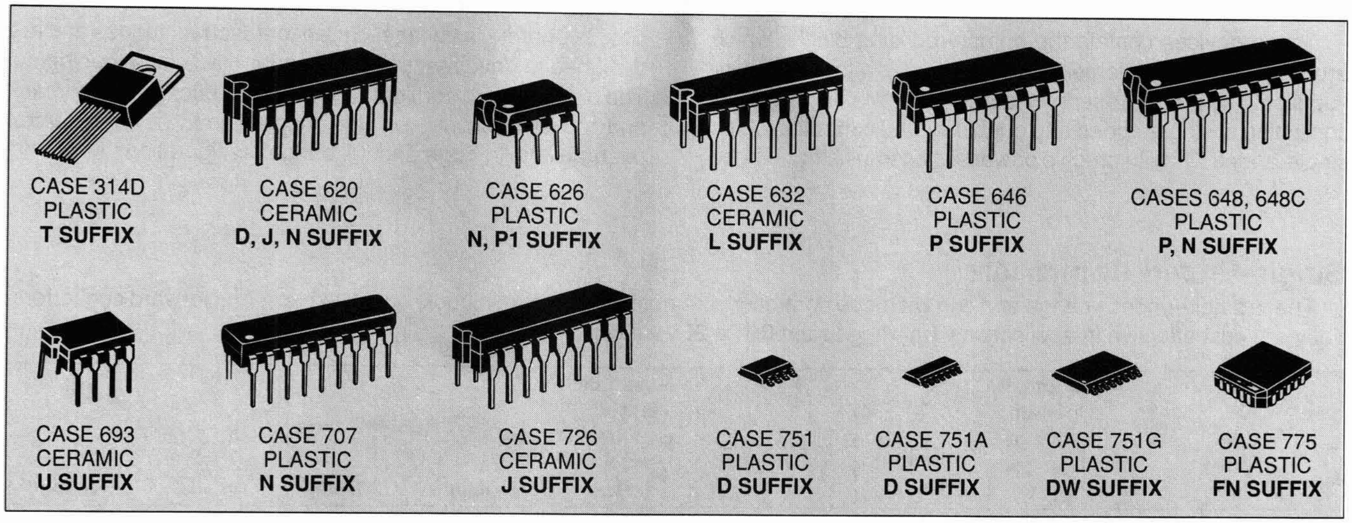

Dual ± 15 V Tracking Regulators

Internally, the device is set for ± 15 V, but an external adjustment can change both outputs simultaneously, from 8.0 V to 20 V.

Device	V_{out} (V) Min	V_{out} (V) Max	I_O (mA) Max	V_{in} (V) Min	V_{in} (V) Max	P_D (W) Max	Reg_{line} (mV)	Reg_{load} (mV)	T_C %/°C (T_{low} to T_{high}) Typ	T_A (°C)	Suffix/ Package
MC1468	14.5	15.5	± 100	– 17	30	1.0	10	10	3.0	0 to + 75	L
MC1568										–55 to + 125	

Microprocessor Voltage Regulator/Supervisory Circuit

A 5.0 V fixed output with many monitoring functions required in microprocessor-based systems.

Device	V_{out}, V_{ref} (V) Min	V_{out}, V_{ref} (V) Max	I_{sink} (mA) Max	V_{in} (V) Min	V_{in} (V) Max	Reg_{line} (mV) Max	Reg_{load} (mV) Max	T_A (°C)	Suffix/ Package
MC34160	4.75	5.25	100	7.0	40	40	50	0 to + 70	P/648C
MC33160	2.47	2.73	2.0	5.0		20	30	–40 to + 85	

Switching Regulator Control Circuits

These devices contain the primary building blocks which are required to implement a variety of switching power supplies. The product offerings fall into three major categories consisting of single-ended and double-ended controllers, plus single-ended ICs with on-chip power switch transistors. These circuits operate in voltage, current or resonant modes and are designed to drive many of the standard switching topologies. The single-ended configurations include buck, boost, flyback and forward converters. The double-ended devices control push-pull, half bridge and full bridge configurations.

Single-Ended Controllers

These single-ended voltage and current mode controllers are designed for use in buck, boost, flyback, and forward converters. They are cost effective in applications that range from 0.1 to 200 watts power output.

I_O (mA) Max	Minimum Operating Voltage Range (V)	Operating Mode	Reference (V)	Maximum Useful Oscillator Frequency (kHz)	Device	Suffix	T_A (°C)	Package
250 (Uncommitted Drive Output	7.0 to 40	Voltage	5.0 ± 5.0%	200	MC34060	P	0 to + 70	646
500 (Uncommitted Drive Output)			5.0 ± 1.5%		MC34060A	D	0 to + 70	751A
						L		632
						P		646
					MC33060A	D	–40 to + 85	751A
						P		646
1000 (Totem Pole MOSFET Drive Output)	4.2 to 12	Current	1.25 ± 2.0%	300	MC34129	D	0 to + 70	751A
						P		646
					MC33129	D	–40 to + 85	751A
						P		646
	11.5 to 30		5.0 ± 2.0%	500	UC3842A	D	0 to + 70	751A
						N		626
	11 to 30		5.0 ± 1.0%		UC2842A	D	–25 to + 85	751A
						J		693
						N		626
	8.2 to 30		5.0 ± 2.0%		UC3843A	D	0 to + 70	751A
						N		626
			5.0 ± 1.0%		UC2843A	D	–25 to + 85	751A
						J		693
						N		626
	11.5 to 30		5.0 ± 2.0%		UC3844	D	0 to + 70	751A
						N		626
	11 to 30		5.0 ± 1.0%		UC2844	D	–25 to + 85	751A
						J		693
						N		626
	8.2 to 30		5.0 ± 2.0%		UC3845	D	0 to + 70	751A
						N		626
			5.0 ± 1.0%		UC2845	D	–25 to + 85	751A
						J		693
						N		626
	11.5 to 30		5.0 ± 2.0%	500 (Improved Oscillator Specifications with Frequency Guaranteed at 250 kHz)	UC3842B	D	0 to + 70	751A
						D1		751
						N		626
	11 to 30		5.0 ± 1.0%		UC2842B	D	–25 to + 85	751A
						D1		751
						N		626

Single-Ended Controllers (continued)

I_O (mA) Max	Minimum Operating Voltage Range (V)	Operating Mode	Reference (V)	Maximum Useful Oscillator Frequency (kHz)	Device	Suffix	T_A (°C)	Package
1000 (Totem Pole MOSFET Drive Output)	8.2 to 30	Current	5.0 ± 2.0%	500 (Improved Oscillator Specifications with Frequency Guaranteed at 250 kHz)	UC3843B	D	0 to + 70	751A
						D1		751
						N		626
			5.0 ± 1.0%		UC2843B	D	–25 to + 85	751A
						D1		751
						N		626
	11.5 to 30		5.0 ± 2.0%		UC3844B	D	0 to + 70	751A
						D1		751
						N		626
	11 to 30		5.0 ± 1.0%		UC2844B	D	–25 to + 85	751A
						D1		751
						N		626
	8.2 to 30		5.0 ± 2.0%		UC3845B	D	0 to + 70	751A
						D1		751
						N		626
			5.0 ± 1.0%		UC2845B	D	–25 to + 85	751A
						D1		751
						N		626
1000 Source 1500 Sink (Split Totem Pole BIPOLAR Drive Output)	11 to 18		5.0 ± 6.0%	500	MC44602	P2		648C
2000 (Totem Pole MOSFET Drive Output)	9.2 to 30		5.1 ± 1.0%	1000	MC34023	DW	0 to + 70	751G
						FN		775
						P		648
					MC33023	DW	–40 to + 85	751G
						FN		775
						P		648

Single-Ended Controllers With On-Chip Power Switch

These monolithic power switching regulators contain all the active functions required to implement standard DC-to-DC converter configurations with a minimum number of external components.

I_O (mA) Max	Minimum Operating Voltage Range (V)	Operating Mode	Reference (V)	Maximum Useful Oscillator Frequency (kHz)	Device	Suffix	T_A (°C)	Package
1500 (Uncommitted Power Switch)	2.5 to 40	Voltage	1.25 ± 5.2%#	100	µA78S40	PC	0 to + 70	648
						DC		620
						PV	–40 to + 85	648
						DM	–55 to + 125	620
			1.25 ± 2.0%		MC34063A	D	0 to + 70	751
						P1		626
					MC33063A	D	–40 to + 85	751
						P1		626
					MC35063A	U	–55 to + 125	693
	3.0 to 65		1.25 ± 2.0% and 5.05 ± 3.0 %		MC34165	P	0 to + 70	648C
					MC33165		–40 to + 85	
3400 (Uncommitted Power Switch)	2.5 to 40				MC34163		0 to + 70	
					MC33163		–40 to + 85	

Tolerance applies over the specified operating temperature range.

Single-Ended Controllers With On-Chip Power Switch (continued)

I_O (mA) Max	Minimum Operating Voltage Range (V)	Operating Mode	Reference (V)	Maximum Useful Oscillator Frequency (kHz)	Device	Suffix	T_A (°C)	Package
3400§ (Dedicated Emitter Power Switch)	7.5 to 40	Voltage	5.05 ± 2.0%	72 ± 12%	MC34166	T	0 to + 70	314D
				Internally Fixed	MC33166		–40 to + 85	
5500* (Dedicated Emitter Power Switch)					MC34167		0 to + 70	
					MC33167		–40 to + 85	

§ Guaranteed minimum, typically 4300 mA.
* Guaranteed minimum, typically 6500 mA.

Double-Ended Controllers

These double-ended voltage, current and resonant mode controllers are designed for use in push-pull, half-bridge, and full-bridge converters. The are cost effective in applications that range from 100 to 2000 watts power output.

I_O (mA) Max	Minimum Operating Voltage Range (V)	Operating Mode	Reference (V)	Maximum Useful Oscillator Frequency (kHz)	Device	Suffix	T_A (°C)	Package
500 (Uncommitted Drive Outputs)	7.0 to 40	Voltage	5.0 ± 5.0%#	200	TL494	CN	0 to + 70	648
						CJ		620
						IN	–25 to + 85	648
						IJ		620
						MJ	–55 to + 125	
			5.0 ± 1.5%	300	TL594	CN	0 to + 70	648
						IN	–25 to + 85	
						MJ	–55 to + 125	620
± 500 (Totem Pole MOSFET Drive Outputs)	8.0 to 40		5.1 ± 2.0%	400	SG3525A	N	0 to + 70	648
						J		620
					SG3527A	N		648
						J		620
± 200 (Totem Pole MOSFET Drive Outputs)			5.0 ± 2.0%		SG3526	N	0 to +125*	707
						J		726
± 1500 (Totem Pole MOSFET Drive Outputs)	9.6 to 20	Resonant (Zero Current Switch)	5.1 ± 2.0%	1000	MC34066	DW	0 to + 70	751G
						P		648
					MC33066	DW	–40 to + 85	751G
						P		648
		Resonant (Zero Voltage Switch)		2000	MC34067	DW	0 to + 70	751G
						P		648
					MC33067	DW	–40 to + 85	751G
						P		648
2000 (Totem Pole MOSFET Drive Outputs)	9.2 to 30	Current	5.1 ± 1.0%	1000	MC34025	DW	0 to + 70	751G
						FN		775
						P		648
					MC33025	DW	–40 to + 85	751G
						FN		775
						P		648

Tolerance applies over the specified operating temperature range.
* Junction Temperature Range.

Special Switching Regulator Controllers

Dual Channel Current Mode Controllers

These high performance dual channel controllers are optimized for off-line AC-to-DC power supplies and DC-to-DC converters in the flyback topology. The newer -H and -L versions have undervoltage lockout voltages which are optimized for off-line and lower voltage DC-to-DC converters respectively. Applications include desktop computers, peripherals, televisions, games, and various consumer appliances.

I_O (mA) Max	Minimum Operating Voltage Range (V)	Operating Mode	Reference (V)	Maximum Useful Oscillator Frequency (kHz)	Device	Suffix	T_A (°C)	Package
± 1000 (Totem Pole MOSFET Drive Outputs)	11 to 15.5	Current	5.0 ± 2.0%	500	MC34065	DW	0 to + 70	751G
						P		648
					MC33065	DW	–40 to + 85	751G
						P		648
	11 to 20		5.0 ± 2.6%		MC34065	DW-H	0 to + 70	751G
						P-H		648
					MC33065	DW-H	–40 to + 85	751G
						P-H		648
	8.2 to 20				MC34065	DW-L	0 to + 70	751G
						P-L		648
					MC33065	DW-L	–40 to + 85	751G
						P-L		648

Universal Microprocessor Power Supply Controller

A versatile power supply control circuit for microprocessor-based systems, this device is mainly intended for automotive applications and battery powered instruments. The circuit provides a power-on Reset delay and a Watchdog feature for orderly microprocessor operation.

Regulated Outputs	Output Current (mA)	V_{CC} (V) Min	V_{CC} (V) Max	Device	T_A (°C)	Reference (V)	Key Supervisory Features	Package
E^2PROM Programmable Output: 24 V (Write Mode) 5.0 V (Read Mode)	150 peak	6.0	35	TCF5600	–40 to + 85	2.5 ± 3.2%	MPU Reset and Watchdog Circuit	707
Fixed Linear Output: 5.0 V	10 to external buffer transistor			TCA5600	0 to + 75			

Power Supervisory Circuits

A variety of Power Supervisory Circuits are offered. Overvoltage sensing circuits which drive "crowbar" SCRs are provided in several configurations from a low cost three-terminal version to 8-pin devices which provide pin-programmable trip-voltages or additional features, such as an indicator output drive and remote activation capability. An over/undervoltage protection circuit is also offered.

Overvoltage "Crowbar" Sensing Circuit

MC3523U T_A = –55° to +125°C, Case 693
MC3423P1,U T_A = 0° to +70°C, Case 626, 693

This device can protect sensitive circuitry from power supply transients or regulator failure when used with an external "Crowbar" SCR. The device senses voltage and compares it to an internal 2.6 V reference. Overvoltage trip is adjustable by means of an external resistive voltage divider. A minimum duration before trip is programmable with an external capacitor. Other features include a 300 mA high current output for driving the gate of a "Crowbar" SCR, an open-collector indicator output and remote activation capability.

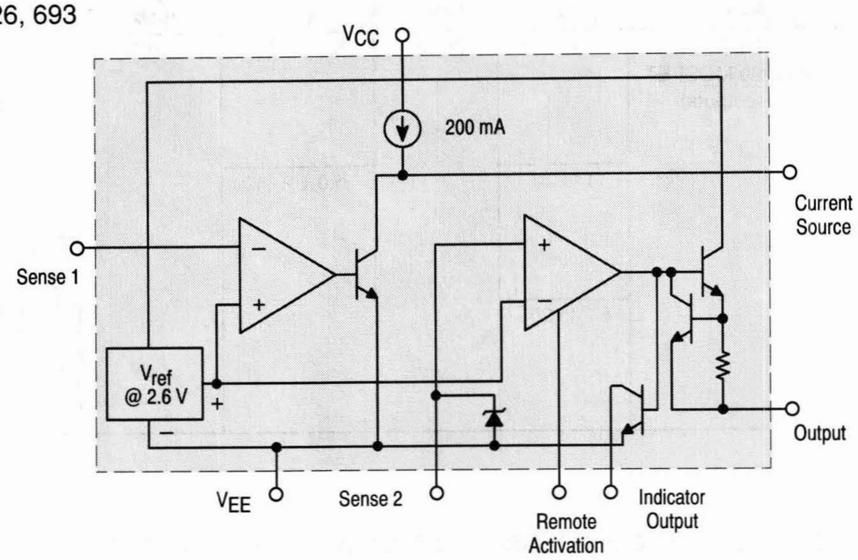

Over/Undervoltage Protection Circuit

MC3425P1 T_A = 0° to +70°C, Case 626

The MC3425 is a power supply supervisory circuit containing all the necessary functions required to monitor over and undervoltage fault conditions. This device features dedicated over and undervoltage sensing channels with independently programmable time delays. The overvoltage channel has a high current Drive Output for use in conjunction with an external SCR "Crowbar" for shutdown. The undervoltage channel input comparator has hysteresis which is externally programmable, and an open-collector output for fault indication.

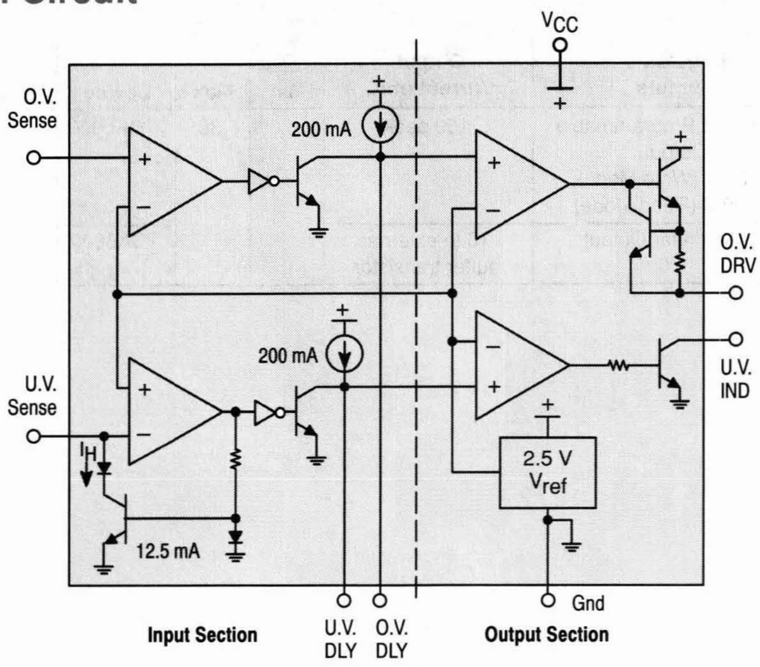

Undervoltage Sensing Circuit

MC34064P-5, D-5 T_A = 0° to +70°C, Case 29, 751
MC33064P-5, D-5 T_A = –40° to +85°C, Case 29, 751
MC34164P-3, P-5, D-3, D-5 T_A = –0° to +70°C, Case 29, 751
MC33164P-3, P-5, D-3, D-5 T_A = –40° to +85°C, Case 29, 751

The MC34064 and MC34164 are two families of undervoltage sensing circuits specifically designed for use as reset controllers in microprocessor-based systems. They offer the designer an economical solution for low voltage detection with a single external resistor. Both parts feature a trimmed bandgap reference, and a comparator with precise thresholds and built-in hysteresis to prevent erratic reset operation.

The two families of undervoltage sensing circuits taken together, cover the needs of the most commonly specified power supplies used in MCU/MPU systems. Key parameter specifications of the MC34164 family were chosen to complement the MC34064 series. The table summarizes critical parameters of both families. The MC34064 fulfills the needs of a 5.0 V ± 5% system and features a tighter hysteresis specification. The MC34164 series covers 5.0V ± 10% and 3.0 V ± 5% power supplies with significantly lower power consumption, making them ideal for applications where extended battery life is required such as consumer products or hand held equipment.

Applications include direct monitoring of the 5.0 Volt MPU/logic power supply used in appliance, automotive, consumer, and industrial equipment.

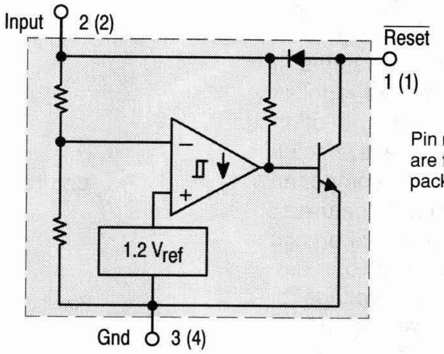

Pin numbers in parenthesis are for the D suffix SO-8 package.

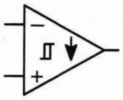

= Sink Only Positive True Logic

The MC34164 is specifically designed for battery powered applications where low bias current (1/25th of the MC34064's) is an important characteristic.

Undervoltage Sense/Reset Controller Features

Device	Suffix	Standard Power Supply Supported	Typical Threshold Voltage (V)	Typical Hysteresis Voltage (V)	Minimum Output Sink Current (mA)	Power Supply Input Voltage Range (V)	Maximum Quiescent Input Current	Package Type
MC34064/MC33064	P-5	5.0V ± 5%	4.6	0.02	10	1.0 to 10	500 μA @ V_{in} = 5.0V	TO-92
	D-5							SO-8
MC34164/MC33164	P-5	5.0V ± 10%	4.3	0.09	7.0	1.0 to 12	20 μA @ V_{in} = 5.0V	TO-92
	D-5							SO-8
	P-3	3.0V ± 5%	2.7	0.06	6.0		15 μA @ V_{in} = 3.0V	TO-92
	D-3							SO-8

Note: MC34X64 devices are specified to operate from 0° to +70°C, and MC33X64 devices operate from –40° to +85°C.

Microprocessor Voltage Regulator and Supervisory Circuit

MC34160P T_A = 0° to +70°C, Case 648C
MC33160P T_A = –40° to +85°C, Case 648C

The MC34160 Series is a voltage regulator and supervisory circuit containing many of the necessary monitoring functions required in microprocessor based systems. It is specifically designed for appliance and industrial applications offering the designer a cost effective solution with minimal external components. These integrated circuits feature a 5.0 V, 100 mA regulator with short circuit current limiting, pinned out 2.6 V bandgap reference, low voltage reset comparator, power warning comparator with programmable hysteresis, and an uncommitted comparator ideally suited for microprocessor line synchronization.

Additional features include a chip disable input for low standby current, and internal thermal shutdown for over temperature protection.

These devices are contained in a 16 pin dual-in-line heat tab plastic package for improved thermal conduction.

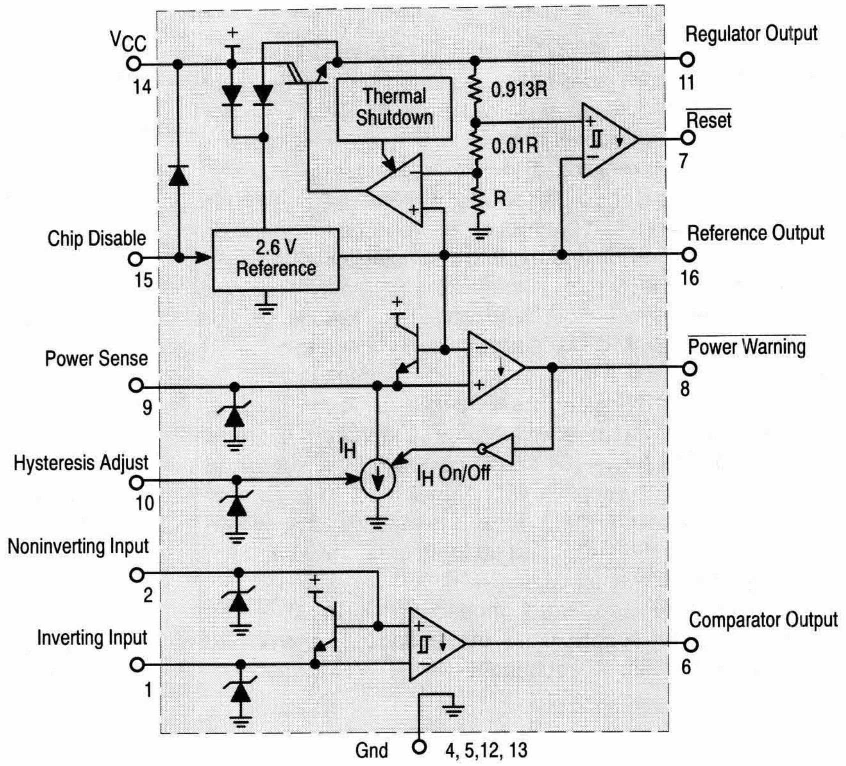

Universal Voltage Monitor

MC34161P,D T_A = 0° to +70°C, Case 626, 751
MC33161P,D T_A = –40° to +85°C, Case 626, 751

The MC34161 series of Universal Voltage Monitor ICs are capable of being used in a wide variety of voltage sensing aplications. These versatile devices offer an economical solution for implementing over, under, and window detection of both positive and/or negative voltages.

The circuit consists of two comparator channels each with hysteresis, a pinned out 2.54 V reference, two open collector outputs capable of sinking in excess of 10 mA, and a "Mode Select" input for programming the functions of the two comparator channels. The devices are fully functional from 2.0 V to 40 V for positive voltage sensing and from 4.0 V to 40 V for negative voltage sensing.

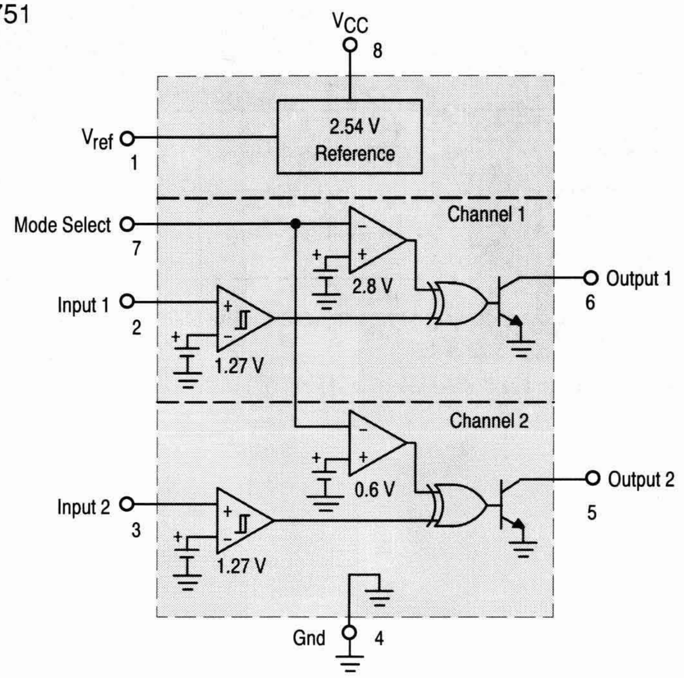

MOSFET Drivers

High Speed Dual Drivers

Inverting
MC34151P,D T_A = 0° to +70°C, Case 626, 751
MC33151P,D T_A = –40° to +85°C, Case 626, 751

Noninverting
MC34152P,D T_A = 0° to +70°C, Case 626, 751
MC33152P,D T_A = –40° to +85°C, Case 626, 751

These two series of High Speed Dual MOSFET Driver ICs are specifically designed for applications requiring low current digital circuitry to drive large capacitive loads at high slew rates. Both series feature a unique undervoltage lockout function which puts the outputs in a defined low state in an undervoltage condition. In addition, the low on-state resistance of these bipolar drivers allows significantly higher output currents at lower supply voltages than with competing drivers using CMOS technology.

The MC34151 series is pin-compatible with the MMH0026 and DS0026 dual MOS clock drivers, and can be used as drop-in replacements to upgrade system performance. The MC34152 noninverting series is a mirror image of the inverting MC34151 series.

These devices can enhance the drive capabilities of first generation switching regulators or systems designed with CMOS/TTL logic devices. They can be used in DC-to-DC converters, motor controllers, capacitor charge pump converters, or virtually any other application requiring high speed operation of power MOSFETs.

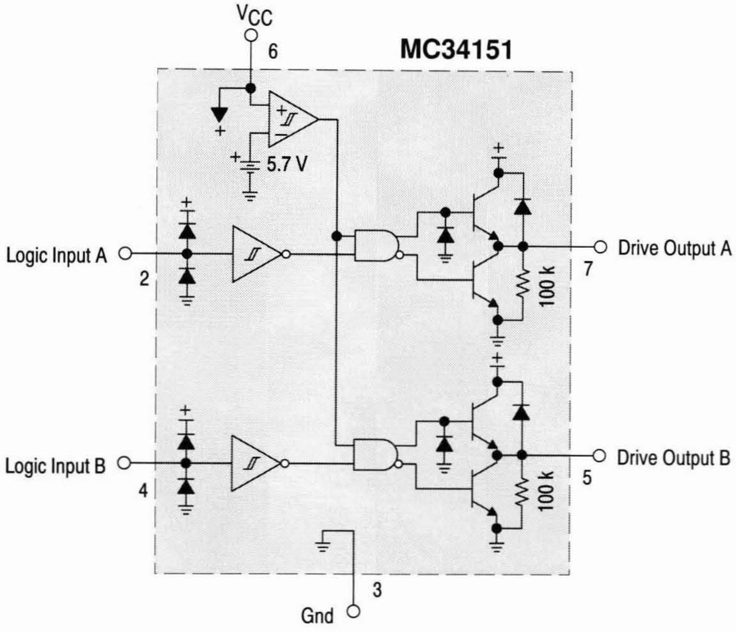

Power/Motor Control Circuits

In Brief . . .

With the expansion of electronics into more and more mechanical systems there comes an increasing demand for simple but intelligent circuits that can blend these two technologies. In the past, the task of power/motor control was once accomplished with discrete devices. But today this task is being performed by bipolar IC technology due to cost, size, and reliability constraints. Motorola offers integrated circuits designed to anticipate the requirements for both simple and sophisticated control systems, while providing cost effective solutions to meet the needs of the applications.

Page

Power Controllers 4.3-2

Motor Controllers 4.3-4

Power/Motor Control Circuits

Power Controllers

An assortment of battery and ac line-operated control ICs for specific applications is shown. They are designed to enhance system performance and reduce complexity in a wide variety of control applications.

Power Controllers
- Zero Voltage Switches 4.3-2
- Zero Voltage Controller 4.3-3
- Integrated Solenoid Driver 4.3-3
- High-Side Driver Switch 4.3-3

Motor Controllers
- Brushless DC Motor Controllers 4.3-4
- Closed-Loop Brushless Motor Adapter 4.3-5
- DC Servo Motor Controller/Driver 4.3-6
- Stepper Motor Driver 4.3-6
- Universal Motor Speed Controllers 4.3-7
- Triac Phase Angle Controller 4.3-7

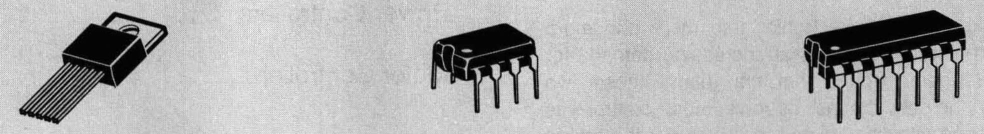

CASE 314D
PLASTIC
S, T SUFFIX

CASE 626
PLASTIC
B SUFFIX

CASE 646
PLASTIC

Zero Voltage Switches

CA3079/CA3059 T_A = –40° to +85°C, Case 646

These devices are designed for thyristor control in a variety of AC power switching applications for AC input voltages of 24 V, 120 V, 208/230 V, and 227 V @ 50/60 Hz. Features include:

- **LIMITER-POWER SUPPLY** — Allows operation directly from an AC line.
- **DIFFERENTIAL ON/OFF SENSING AMPLIFIER** — Tests for condition of external sensors or input command signals. Proportional control capability or hysteresis may be implemented.
- **ZERO-CROSSING DETECTOR** — Synchronizes the output pulses to the zero voltage point of the AC cycle. Eliminates RFI when used with resistive loads.
- **TRIAC DRIVE** — Supplies high-current pulses to the external power controlling thyristor.
- **PROTECTION CIRCUIT** (CA3059 only) — A built-in circuit may be actuated, if the sensor opens or shorts, to remove the drive circuit from the external triac.
- **INHIBIT CAPABILITY** (CA3059 only) — Thyristor firing may be inhibited by the action of an internal diode gate.
- **HIGH POWER DC COMPARATOR OPERATION** (CA3059 only) — Operation in this mode is accomplished by connecting Pin 7 to Pin 12 (thus overriding the action of the zero-crossing detector).

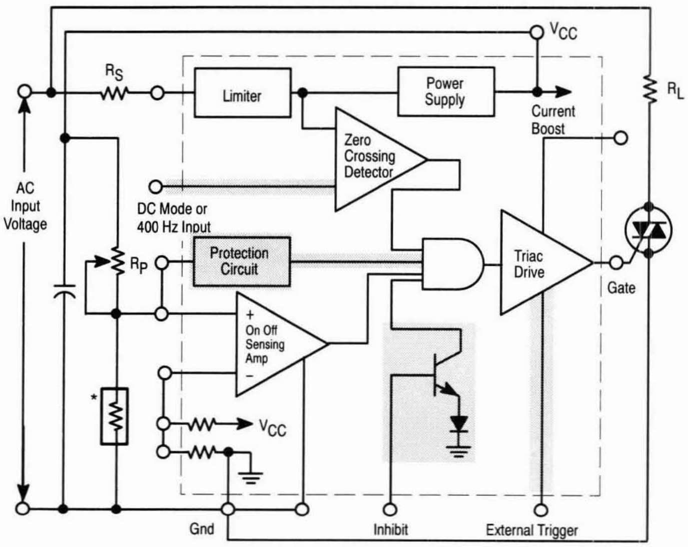

*NTC Sensor
NOTE: Shaded Area Not Included with CA3079.

Zero Voltage Controller

UAA1016B T_A = –20° to +100°C, Case 626

This device is designed to drive triacs with the Zero Voltage technique which allows RFI free power regulation of resistive loads. They provide the following features:

- Proportional Temperature Control Over an Adjustable Band
- Adjustable Burst Frequency (to Comply with Standards)
- Sensor Fail-Safe
- No DC Current Component Through the Main Line (to Comply with Standards)
- Negative Output Current Pulses (Triacs Quadrants 2 and 3)
- Direct AC Line Operation
- Low External Components Count

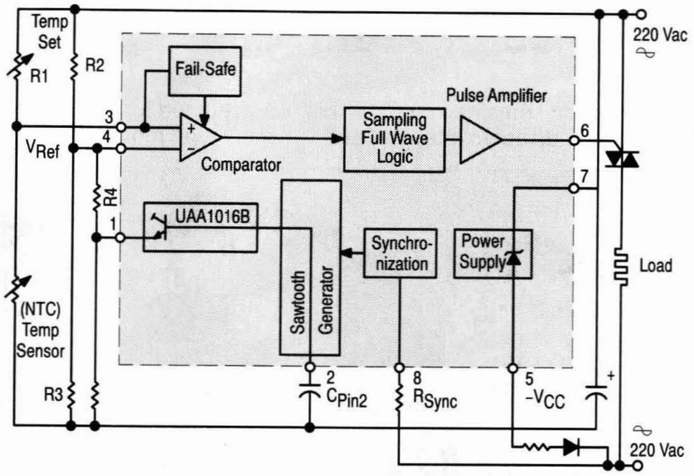

Integrated Solenoid Driver

MC3484S2-2,S4-2 T_J = –40° to +125°C, Case 314D

The MC3484 is an integrated monolithic solenoid driver. Its typical function is to apply full battery voltage to fuel injector(s) for rapid current rise, in order to produce positive injector opening. When load current reaches a preset level (4.0 A in MC3484S4-2 or 2.4 A in MC3484S2-2) the injector driver reduces the load current by a 4-to-1 ratio and operates as a constant current supply. This condition holds the injector open and reduces system dissipation.

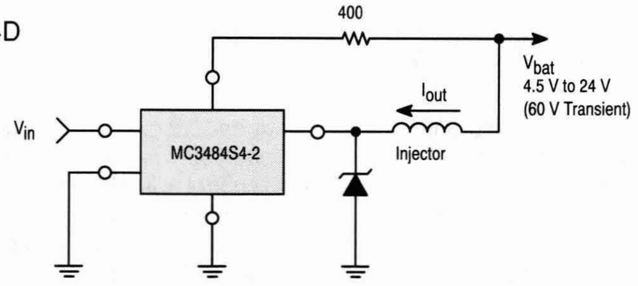

High-Side Driver Switch

MC3399T T_J = –40° to +150°C, Case 314D

The MC3399T is a High-Side Driver Switch that is designed to drive loads from the positive side of the power supply. The output is controlled by a TTL compatible Enable pin. In the ON state, the device exhibits very low saturation voltages for load currents in excess of 750 mA. The device also protects the load from positive or negative-going high voltage transients by becoming an open circuit and isolating the transient for its duration from the load.

The MC3399T is fabricated on a power BiMOS process which combines the best features of Bipolar and MOS technologies. The mixed technology provides higher gain PNP output devices and results in Power Integrated Circuits with reduced quiescent current.

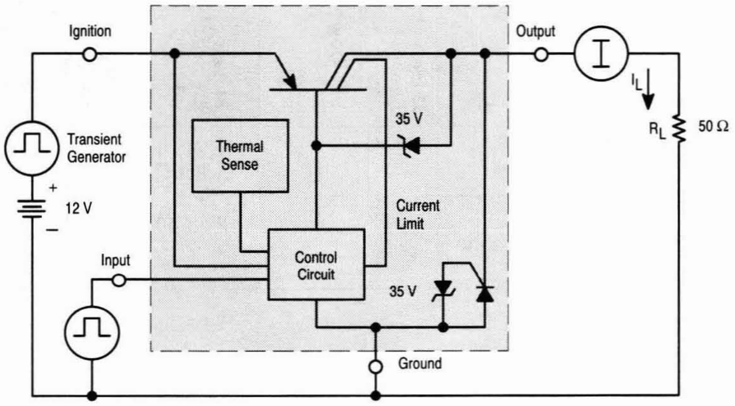

Power/Motor Control Circuits

Motor Controllers

This section contains integrated circuits designed for cost effective control of specific motor families. Included are controllers for brushless, dc servo, stepper, and universal type motors.

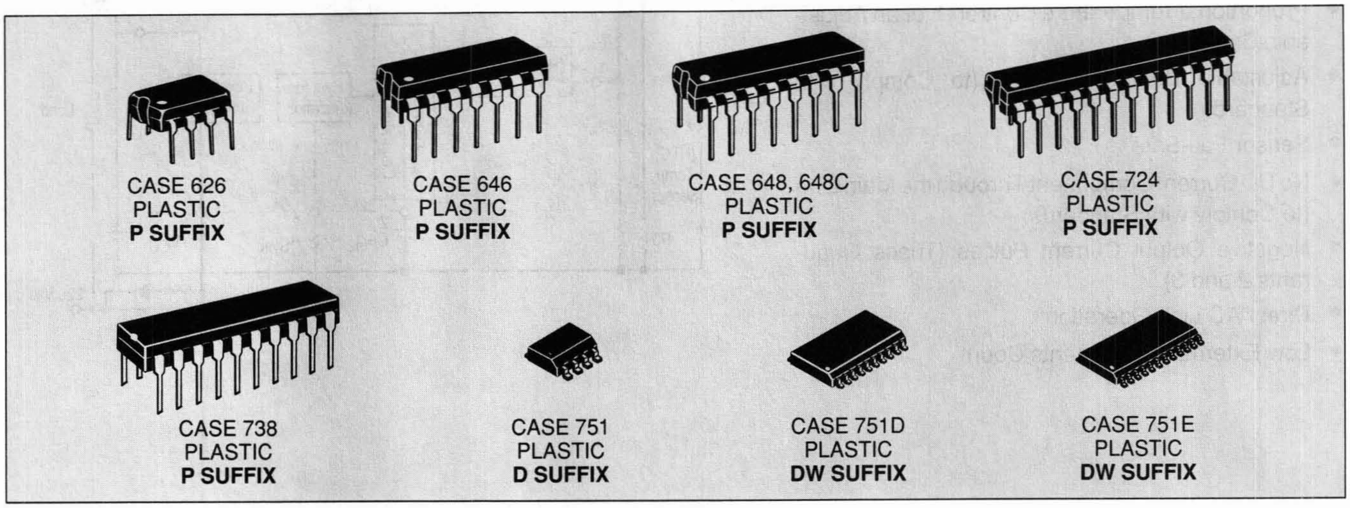

Brushless DC Motor Controllers

Advances in magnetic materials technology and integrated circuits have contributed to the unprecedented rise in popularity of brushless DC motors. Linear control ICs are making the many features and advantages of brushless motors available at a much more economical price. Motorola offers a family of monolithic integrated brushless DC motor controllers. These ICs provide a choice of control functions which allow many system features to be easily implemented at a fraction of the cost of discrete solutions. The following table summarizes and compares the features of Motorola's brushless motor controllers.

Features Summary for Motorola Brushless DC Motor Controllers

Device	Operating Voltage Range (V)		Undervoltage Lockout	Internal Thermal Shutdown	Fwd/Rev Control	Sensor Electrical Phasing	Output Enable	Output Drivers		6.25 V Reference Output	Current Sense Comparator Input(s)	Error Amplifier	FAULT Output	Separate Drive V_C	Brake Input	Suffix/ Package
	V_{CC}	V_C						Totem Pole (Bottom)	Open Collector (Top)							
MC33033	10-30		✓	✓	✓	60°/300° and 120°/240°	✓	✓	✓	✓	Noninv. Only	✓				P/738 DW/751D
MC33035	10-40	10-30	✓	✓	✓		✓	✓	✓	✓	Noninv. and Inv.	✓	✓	✓	✓	P/724 DW/751E

MC33035P, DW T_A = –40° to +85°C, Case 724, 751E

The MC33035 is a second generation high performance brushless DC motor controller which contains all of the active functions required to implement a full featured open-loop motor control system. While being pin-compatible with its MC33034 predecessor, the MC33035 offers additional features at a lower price. The two additional features provided by the MC33035 are a pin which allows the user to select 60°/300° or 120°/240° sensor electrical phasings, and access to both inverting and noninverting inputs of the current sense comparator. The earlier devices had two part numbers which were needed to support the different sensor phasings, and the inverting input to the current sense comparator was internally grounded. All of the control and protection features of the MC33034 are also provided in the MC33035.

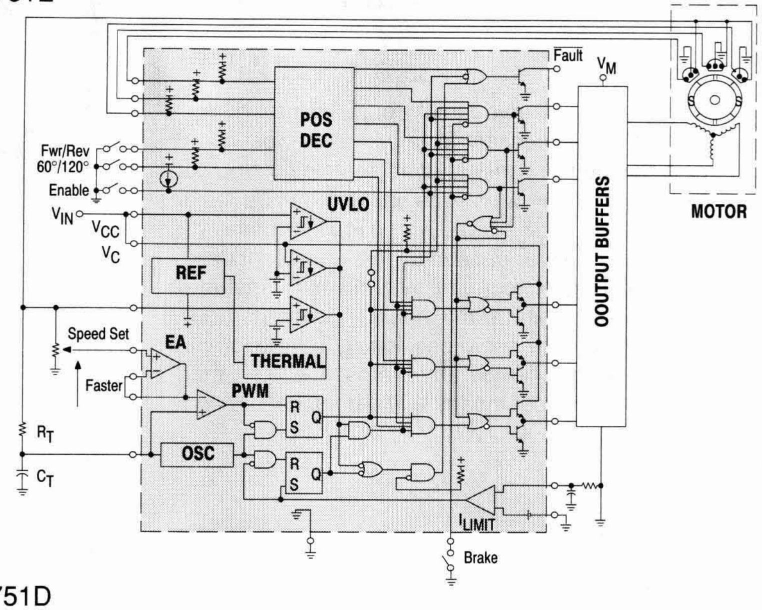

MC33033P, DW T_A = –40° to +85°C, Case 738, 751D

The MC33033 is a lower cost second generation brushless DC motor controller which has evolved from the full featured MC33034 and MC33035 controllers. The MC33033 contains all of the active functions needed to implement a low cost open-loop motor control system. This IC has all of the key control and protection functions of the two full featured devices with the following secondary features deleted: separate drive-circuit supply and ground pins, the brake input, and the fault output signal. Like its MC33035 predecessor, the MC33033 has a control pin which allows the user to select 60°/300° or 120°/240° sensor electrical phasings.

Because of its low cost, the MC33033 can efficiently be used to control brush DC motors as well as brushless. A brush DC motor can be driven using two of the three drive output phases provided in the MC33033, while the Hall sensor input pins are selectively tied to V_{ref} or ground. Other features such as forward/reverse, output enable, speed control, current limiting, undervoltage lockout and internal thermal shutdown will still remain functional.

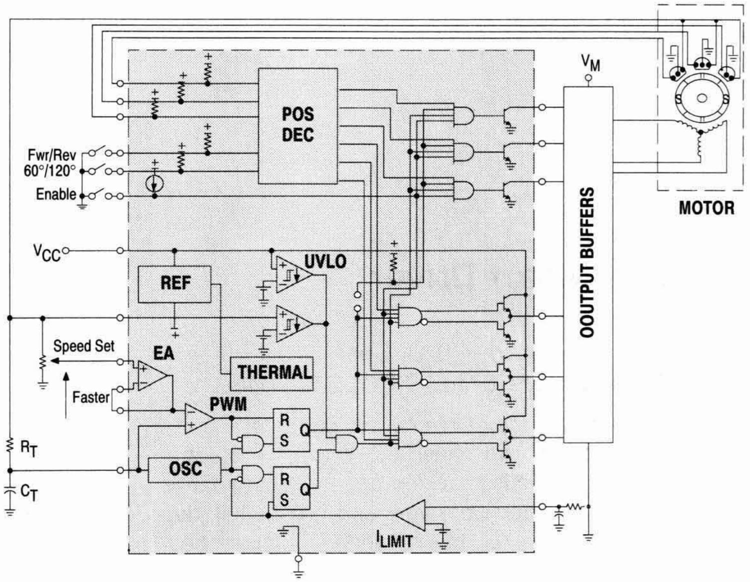

Closed-Loop Brushless Motor Adapter

MC33039P, D T_A = –40° to +85°C, Case 626, 751

The MC33039P,D is a high performance close-loop speed control adapter specifically designed for use in brushless dc motor control systems. Implementation will allow precise speed regulation without the need for a magnetic or optical tachometer. These devices contain three input buffers each with hysteresis for noise immunity, three digital edge detectors, a programmable monostable, and an internal shunt regulator. Also included is an inverter output for use in systems that require conversion of sensor phasing. Although this device is primarily intended for use with the MC33033/35 brushless motor controllers, it can be used cost effectively in many other closed-loop speed control applications.

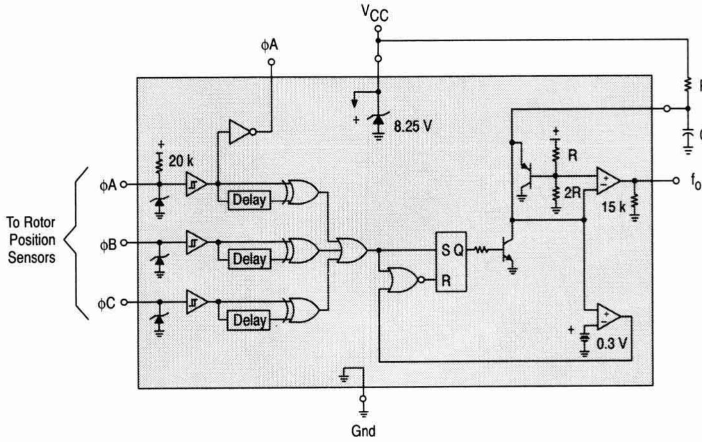

DC Servo Motor Controller/Driver

MC33030P T_A = –40° to +85°C, Case 648C

A monolithic dc servo motor controller providing all active functions necessary for a complete closed loop system. This device consists of an on-chip op amp and window comparator with wide input common mode range, drive and brake logic with direction memory, a power H switch driver capable of 1.0 A, independently programmable over current monitor and shutdown delay, and over voltage monitor. This part is ideally suited for almost any servo positioning application that requires sensing of temperature, pressure, light, magnetic flux, or any other means that can be converted to a voltage.

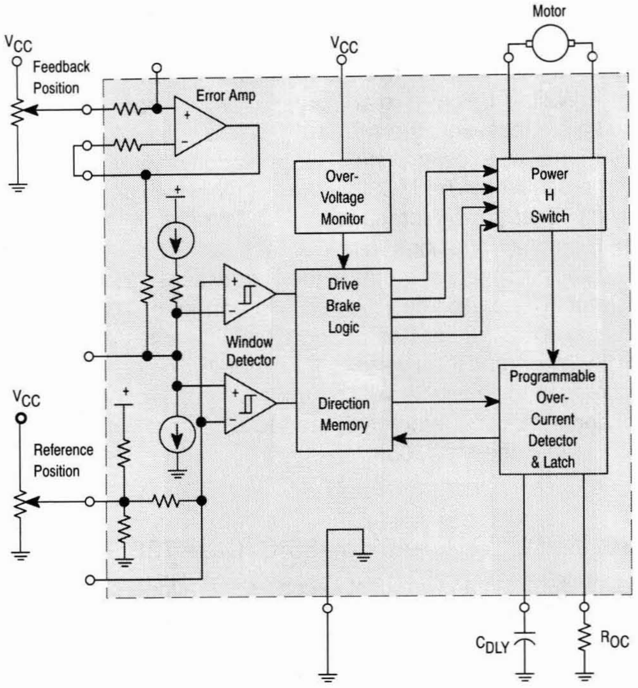

Stepper Motor Driver

MC3479P T_A = 0° to +70°C, Case 648C
SAA1042V,AV T_A = 0° to +70°C, Case 648C

These Stepper Motor Drivers provide up to 500 mA of drive per coil for two phase 6.0 V to 24 V stepper motors. Control logic is provided to accept commands for clockwise, counter clockwise and half or full step operation. The MC3479P has an added Output Impedance Control (OIC) and a Phase A drive state indicator (not available on SAA1042 devices).

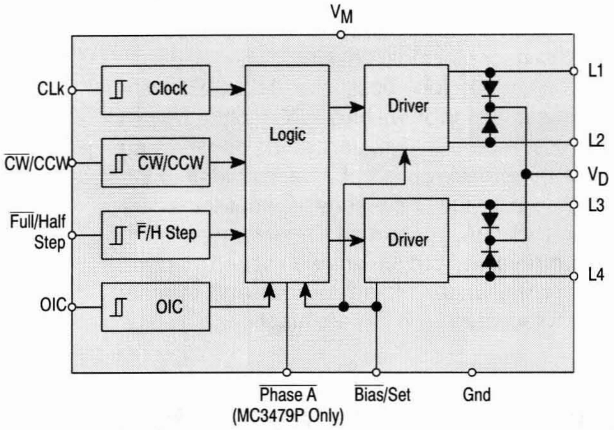

Universal Motor Speed Controllers

TDA1085A T_A = 0° to +70°C, Case 648

This device contains all the necessary functions for the speed control of universal (ac/dc) motors in an open or closed loop configuration. Facility for defining the initial speed/time characteristic. The circuit provides a phase angle varied trigger pulse to the motor control triac.

- Guaranteed Full Wave Triac Drive
- Soft-Start from Power-up
- On-Chip Frequency/Voltage Converter and Ramp Generator
- Current Limiting Incorporated
- Direct Drive from AC Line

TDA1085C T_A = –10° to +120°C, Case 648

Similar to TDA1085A, but designed for commercial washing machine service.

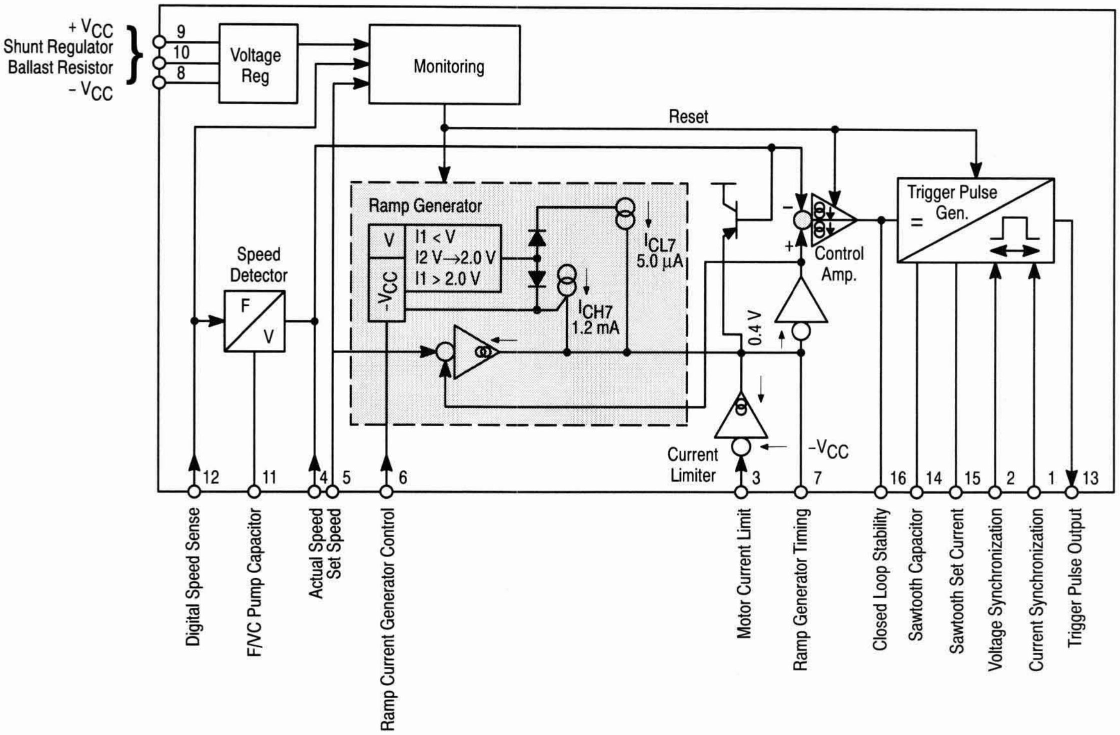

Triac Phase Angle Controller

TDA1185A T_A = 0° to +70°C, Case 646

This device generates controlled triac triggering pulses and allows tacholess speed stabilization of universal motors by an integrated positive feedback function.

- Low Cost External Components Count
- Optimum Triac Firing (2nd and 3rd Quadrants)
- Repetitive Trigger Pulses When Triac Current is Interrupted by Motor Brush Bounce
- Triac Current Sensed to Allow Inductive Loads
- Soft-Start
- Power Failure Detection and General Circuit Reset
- Low Power Consumption: 1.0 mA

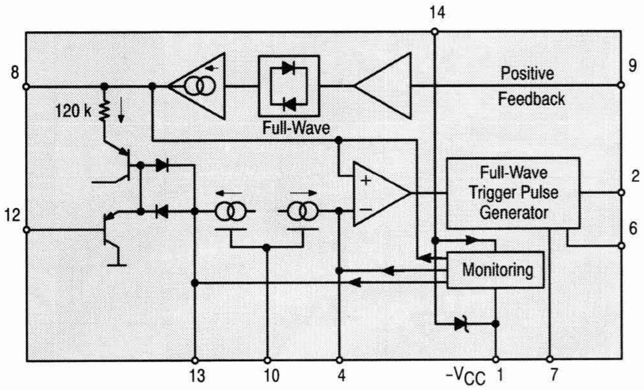

Voltage References

In Brief . . .

Motorola's line of precision voltage references is designed for applications requiring high initial accuracy, low temperature drift, and long term stability. Initial accuracies of ± 1.0%, and ± 2.0% mean production line adjustments can be eliminated. Temperature coefficients of 25 ppm/°C max (typically 10 ppm/°C) provide excellent stability. Uses for the references include D/A converters, A/D converters, precision power supplies, voltmeter systems, temperature monitors, and many others.

	Page
Precision Low Voltage References	4.4-2

Voltage References

Precision Low Voltage References

A family of precision low voltage bandgap reference devices designed for applications requiring low temperature drift.

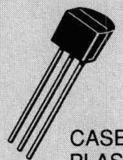

CASE 29
PLASTIC
LP, Z SUFFIX

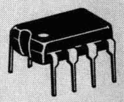

CASE 626
PLASTIC
P SUFFIX

CASE 693
CERAMIC
JG, U SUFFIX

CASE 751
PLASTIC
D SUFFIX

V_{out} (V) Typ	I_O (mA) Max	V_{out}/T ppm/°C Max	Device		Reg_{line} (mV) Max	Reg_{load} (mV) Max	Suffix/ Package
			0° to + 70°C	–55° to +125°C –40° to +85°C			
1.235 ± 12 mV 1.235 ± 25 mV	20	80 Typ	LM385BZ-1.2 LM385Z-1.2	LM285Z-1.2 (–40° to +85°C)	(Note 1)	1.0 (Note 2)	Z/29
2.5 ± 38 mV 2.5 ± 75 mV			LM385BZ-2.5 LM385Z-2.5	LM285Z-2.5 (–40° to +85°C)		2.0 (Note 3)	
2.5 ± 25 mV	10	25	MC1403A	MC1503A	3.0/4.5 (Note 4)	10 (Note 6)	U/693, D/751
		40	MC1403				
		55		MC1503			
5.0 ± 50 mV		25	MC1404AU5		6.0 (Note 5)		U/693
		40	MC1404U5				
		55		MC1504U5			
6.25 ± 60 mV		25	MC1404AU6				
		40	MC1404U6				
		55		MC1504U6			
10 ± 100 mV		25	MC1404AU10				
		40	MC1404U10				
		55		MC1504U10			
2.5 to 37	100	50 Typ	TL431C,AC	TL431I, AI (–40° to +85°C)	Shunt Reference Dynamic Impedance (z) ≤ 0.5 Ω		LP/29, P/626 JG/693, D/751
				TL431M			JG/693

Notes:
1. Micropower Reference Diode Dynamic Impedance (z) ≤ 1.0 Ω at I_R = 100 µA
2. 10 µA ≤ I_R ≤ 1.0 mA
3. 20 µA ≤ I_R ≤ 1.0 mA
4. 4.5 V ≤ V_{in} ≤ 15 V/15 V ≤ V_{in} ≤ 40V
5. (V_{out} + 2.5 V) ≤ V_{in} ≤ 40V
6. 0 mA ≤ I_L ≤ 10 mA

Data Conversion

In Brief . . .

Motorola's line of digital-to-analog and analog-to-digital converters includes several well established industry standards, and many are available in various linearity grades so as to suit most any application.

The A/D converters have 7 and 8-bit flash converters suitable for NTSC and PAL systems, CMOS 8 to 10-bit converters, as well as other high-speed digitizing applications.

The D/A converters have 6 and 8-bit devices, video speed (for NTSC and PAL) devices, and triple video DAC with on-board color palette for color graphics applications.

Page

A-D Converters 4.5-2

D-A Converters 4.5-3

A-D/D-A Converters 4.5-3

Package Overview 4.5-4

Data Conversion

The line of data conversion products which Motorola offers spans a wide spectrum of speed and resolution/accuracy. Features, including bus compatibility, minimize external parts count and provide easy interface to microprocessor systems. Various technologies, such as Bipolar and CMOS, are utilized to achieve functional capability, accuracy and production repeatability. Bipolar technology generally results in higher speed, while CMOS devices offer greatly reduced power consumption.

A-D Converters
CMOS 4.5-2
Bipolar 4.5-2
D-A Converters
CMOS 4.5-3
Bipolar 4.5-3
A-D/D-A Converters
CMOS — For Telecommunications 4.5-3
Package Overview 4.5-4

A-D Converters

CMOS

Resolution (Bits)	Device	Nonlinearity Max	Conversion Time/Rate	Input Voltage Range	Supplies (V)	Temperature Range (°C)	Suffix/ Package	Comments
8	MC145040	± 1/2 LSB	10 µs	0 to V_{DD}	+5.0 ± 10%	–40 to +85 (Suffix 2 devices)	P/738 FN/775	Requires External Clock, 11-Ch MUX
	MC145041		20 µs			–40 to +125 (Suffix 1 devices)	DW/751D	Includes Internal Clock, 11-Ch MUX
	MC14442					–40 to +85	P/710 FN/776	µP Compatible 11-Ch MUX S.A.R.
	MC14549B/ MC14559B	Successive Approximation Registers			+3.0 to +18	–55 to +125 –40 to +85	L/620 P/648	Compatible with MC1408 S.A.R. 8-bit D-A Converter
Triple 8-Bit	MC44250	1 LSB	15 MHz	1.6 to 4.6 V	+5.0 ± 10%	0 to +70	FN/777	3 Separate Video Channels
10	MC145050	± 1 LSB	21 µs	0 to V_{DD}	+5.0 ± 10%	–40 to +125	P/738 DW/751D	Requires External Clock, 11-Ch MUX
	MC145051		88 µs					Includes Internal Clock, 11-Ch MUX
	MC145053							Includes Internal Clock, 5-Ch MUX
8–10	MC14443/ MC14447	± 0.5% Full Scale	300 µs	Variable w/Supply	+5.0 to +18	–40 to +85	P/648 DW/751G	µP Compatible, Single Slope, 6-Ch MUX
3-1/2 Digit	MC14433	± 0.05% ± 1 Count	40 ms	± 2.0V ± 200 mV	+5.0 to +8.0 –2.8 to –8.0		P/709	Dual Slope

Bipolar

Resolution (Bits)	Device	Nonlinearity Max	Conversion Time/Rate	Input Voltage Range	Supplies (V)	Temperature Range (°C)	Suffix/ Package	Comments
7	MC10321	± 1/2 LSB	40 ns	0 to 2.0 V_{pp} Max	+5.0 and –3.0 to –6.0	0 to +70	P/738 DW/751D	Video Speed, Gray Code TTL Outputs
8	MC10319	± 1 LSB					L/623 P/709 DW/751F Die Form	Video Speed Flash Converter, Internal Gray Code TTL Outputs

D-A Converters

CMOS

Resolution (Bits)	Device	Accuracy @ 25°C Max	Max Settling Time (± 1/2 LSB)	Supplies (V)	Temperature Range (°C)	Suffix/ Package	Comments
6	MC144110	—	—	+5.0 to +15	0 to +85	P/707	Serial input, Hex DAC,
						DW/751D	6 outputs
	MC144111					P/646	Serial input, Quad DAC,
						DW/751G	4 outputs

Bipolar

Resolution (Bits)	Device	Accuracy @ 25°C Max	Max Settling Time (± 1/2 LSB)	Supplies (V)	Temperature Range (°C)	Suffix/ Package	Comments
8	DAC-08	± 1 LSB	150 ns	±4.5 to ±18	0 to +70	EQ, HQ/620	High-speed Multiplying
		± 1/2 LSB				CP, HP, EP/648	
		± 1/4 LSB	135 ns			CD, ED/751B	
	MC1408	± 1/2 LSB	300 ns Typ	+5.0, –5.0 to –15	0 to +75	L8/620, P8/648	Multiplying
	MC1508				–55 to +125	L8/620	
4 x 3	MC10320	± 1/4 LSB	3.0 ns	+5.0 or ±5.0	0 to +70	L/733	125 MHz Color Graphics Triple DAC
	MC10320-1						90 MHz Color
8	MC10322	± 1/2 LSB	5.0 ns	+5.0, –5.2	–40 to +85	P/649	TTL 40 MHz Min
	MC10324			–5.2			ECL 40 MHz Min

A-D/D-A Converters

CMOS — For Telecommunications

Resolution (Bits)	Device	Monotonicity (Bits)	Conversion Time	Input Voltage Range	Supplies (V)	Temperature Range (°C)	Suffix/ Package	Comments
13	MC145402	13	62.5 μs	± 3.28 V peak	± 5.0 to 6.0	–40 to +85	L/620	Digital signal processing (e.g., echo cancelling, high speed modems, phone systems w/ conferencing)

Data Conversion Package Overview

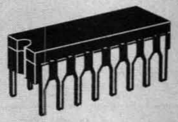

CASE 620
CERAMIC
L, Q SUFFIX

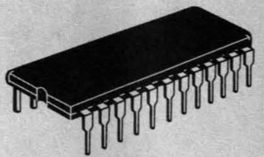

CASE 623
CERAMIC
L SUFFIX

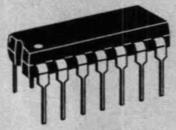

CASE 646
PLASTIC
P SUFFIX

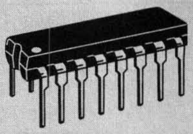

CASE 648
PLASTIC
P SUFFIX

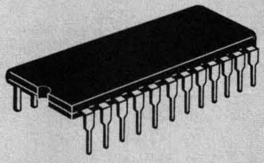

CASE 649
PLASTIC
P SUFFIX

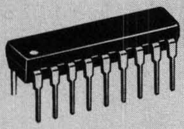

CASE 707
PLASTIC
P SUFFIX

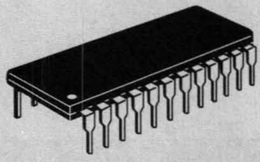

CASE 709
PLASTIC
P SUFFIX

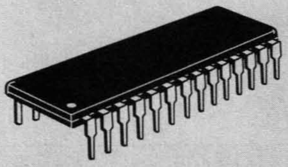

CASE 710
PLASTIC
P SUFFIX

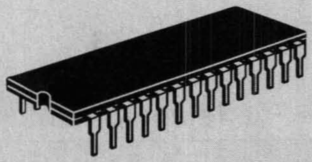

CASE 733
CERAMIC
L SUFFIX

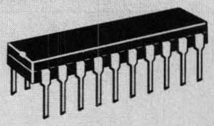

CASE 738
PLASTIC
P SUFFIX

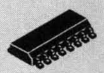

CASE 751B
PLASTIC
D SUFFIX

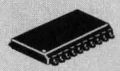

CASE 751D
PLASTIC
DW SUFFIX

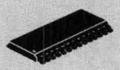

CASE 751F
PLASTIC
DW SUFFIX

CASE 751G
PLASTIC
DW SUFFIX

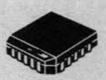

CASE 775
PLASTIC
FN SUFFIX

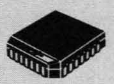

CASE 776
PLASTIC
FN SUFFIX

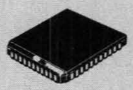

CASE 777
PLASTIC
FN SUFFIX

Interface Circuits

In Brief . . .

Described in this section is Motorola's line of interface circuits, which provide the means for interfacing microprocessor or digital systems to the external world, or to other systems.

Included are devices for reading and writing to a floppy disk or tape drive system, devices which allow a microprocessor to communicate with its own array of memory and peripheral I/O circuits.

The line drivers, receivers, and transceivers permit communications between systems over cables of several thousand feet in length, and at data rates of up to several megahertz. The common EIA data transmission standards, several European standards, IEEE-488, and IBM 360/370 are addressed by these devices.

The peripheral drivers are designed to handle high current loads such as relay coils, lamps, stepper motors, and others. Input levels to these drivers can be TTL, CMOS, High Voltage MOS, or other user defined levels. The display drivers are designed for LCD or LED displays, and provide various forms of decoding.

	Page
Magnetic Read/Write Interface and Control ..	4.6-2
Microprocessor Bus Interface	4.6-4
Single-Ended Bus Transceivers	4.6-5
Line Receivers	4.6-5
Line Drivers	4.6-6
Line Transceivers	4.6-6
EIA-232-D/V.28 CMOS Drivers/Receivers ...	4.6-7
Peripheral Drivers	4.6-7
Display Drivers	4.6-8
Package Overview	4.6-9

Interface Circuits

Magnetic Read/Write Interface and Control

Motorola's line of circuits in this category are well established industry standards for reading and writing in a floppy disk system. The write circuits are designed for both straddle erase and tunnel erase heads, and provide both the writing and erasing functions. The read circuits include all circuitry for peak detection, filtering, wave shaping, and guaranteed peak shift specifications.

Magnetic Read/Write Interface and Control
- Floppy Disk Write Controllers 4.6-2
- Floppy Disk Read Amplifier System 4.6-3
- Magnetic Tape Sense Amplifier 4.6-3

Microprocessor Bus Interface
- Address and Control Bus Extenders 4.6-4
- Microprocessor Data Bus Extenders 4.6-4

Single-Ended Bus Tranceivers
- For Instrumentation Bus 4.6-5
- For High-Current Party-Line Bus 4.6-5

Line Receivers
- General-Purpose 4.6-5
- EIA Standard 4.6-5

Line Drivers
- General Purpose 4.6-6
- 360/370 I/O Interface 4.6-6
- EIA Standard 4.6-6

Line Transceivers 4.6-6
EIA-232-D/V.28 CMOS Drivers/Receivers 4.6-7
Peripheral Drivers 4.6-7

CMOS Display Drivers
- Display Drivers 4.6-8
- Functions 4.6-8

Package Overview 4.6-9

Floppy Disk Write Controllers

(Straddle Erase Controller)
MC3469P T_A = 0° to +70°C, Case 648

Designed to provide the entire interface between floppy disk heads and the head control and write data signals for straddle-erase heads.

Provisions are made for selecting a range of accurately controlled write currents and for head selection during both read and write operation. Additionally, provisions are included for externally adjusting degauss period and inner/outer track compensation.

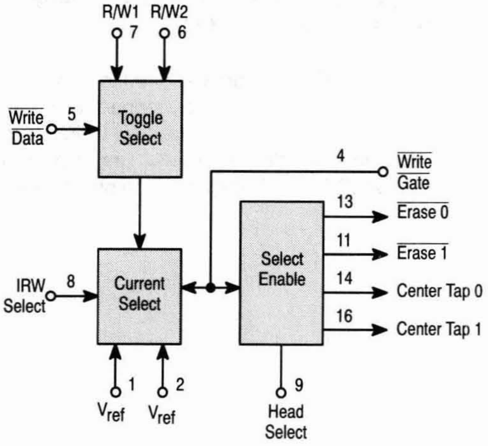

(Tunnel/Straddle Erase Controller)
MC3471P T_A = 0° to +70°C, Case 738

Provides the entire interface between the write data and head control signals and the heads (write and erase) for either tunnel or straddle-erase floppy disk systems.

Has provisions for external adjustment of degauss period, inner/outer track compensation, and the delay from write gate to erase turn-on and turn-off.

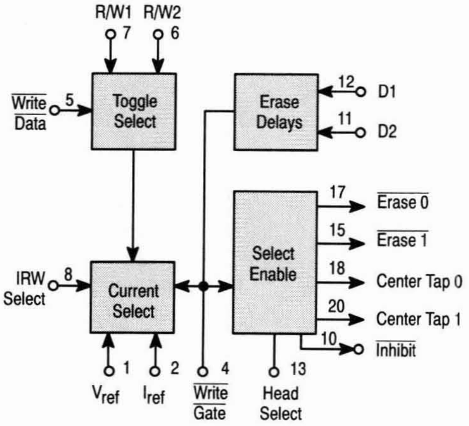

Floppy Disk Read Amplifier System

MC3470P,AP T_A = 0° to +70°C, Case 707

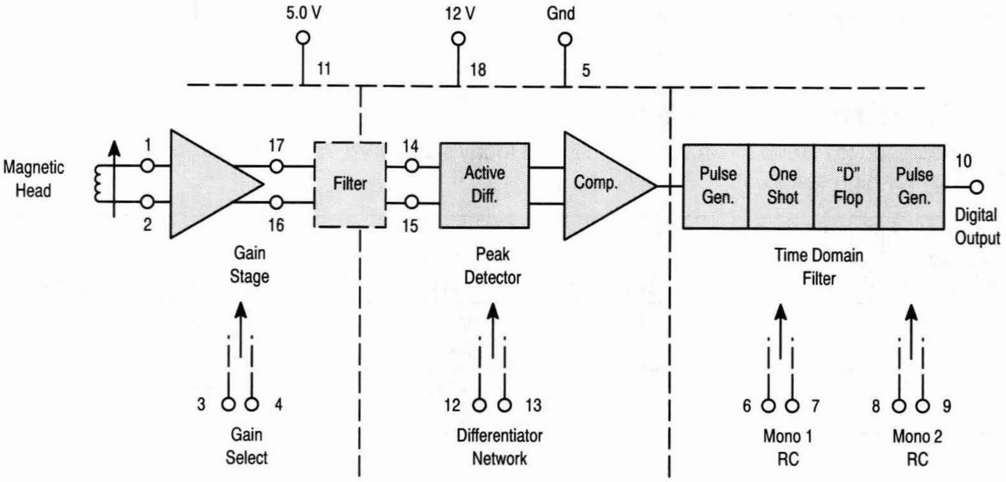

Designed as a monolithic Read Amplifier System for obtaining digital information from floppy disk storage. These devices accept differential AC signals produced by the magnetic head and provide a digital output pulse that corresponds to each peak of the input signal. A gain stage amplifies the input waveform and applies it to an external filter network, enabling the active differentiator and time domain filter to produce the desired output. These devices provide all the active circuitry to perform the floppy disk Read amplifier function, and guarantee to have a maximum peak shift of 5.0%, adjustable to zero for the MC3470P, and 2.0%, adjustable to zero for the MC3470AP.

	Peak Shift (f = 250 kHz, V_{ID} = 1.0 V_{PP})	Differential Input Voltage Gain (f = 200 kHz, V_{ID} = 5.0 mV [RMS])		Input Common Mode Range (5% Max THD)	
		V/V		V	
Device	% Max	Min	Max	Min	Max
MC3470P MC3470AP	5.0 2.0	80 100	130	–0.1	1.5

Magnetic Tape Sense Amplifier

MC3467P T_A = 0° to +70°C, Case 707

The MC3467 provides three independent preamplifiers with individual electronic gain control, optimized for use in 9-track magnetic tape memory systems where low noise and low distortion are paramount objectives.

The electronic gain control allows each amplifier's gain to be set anywhere from essentially zero to a maximum of approximately 100 V/V. Minimum small-signal bandwidth is 10 MHz, and Common Mode Input Voltage range is 1.5 V minimum.

TAPE AMPLIFIER SYSTEM

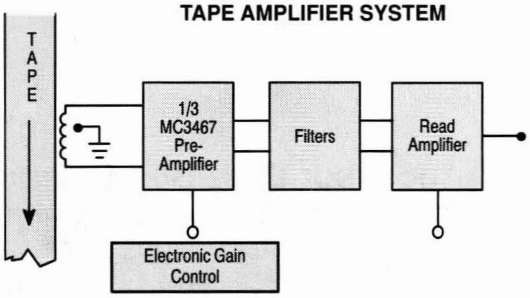

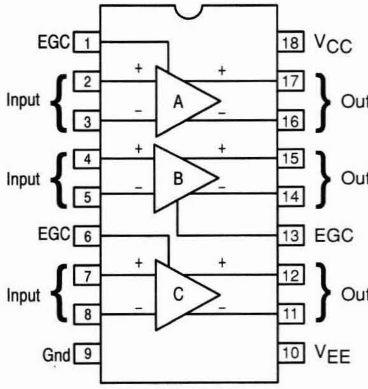

Microprocessor Bus Interface

Motorola offers a spectrum of line drivers and receivers which provide interfaces to many industry standard specifications. Many of the devices add key operational features, such as hysteresis, short circuit protection, clamp diode protection, or special control functions.

Address and Control Bus Extenders

These devices are designed to extend the drive capabilities of today's standard microprocessors. All devices are fabricated with Schottky TTL technology for high speed.

V_{OL} @ 48 mA Max	V_{OH} @ –5.2 mA Min	Propagation Delay Max (ns)	Buffers Per Package	Device	Suffix/ Package	Comments
0.5	2.4	13	6	MC8T97/ MC6887	L/620 P/648	Noninverting
		11		MC8T98/ MC6888		Inverting

Hex 3-State Buffers/Inverters T_A = 0° to +75°C

The noninverting MC8T97/MC6887 and inverting MC8T98/ MC6888 provide two Enable inputs, one controlling four buffers and the other controlling the remaining two buffers.

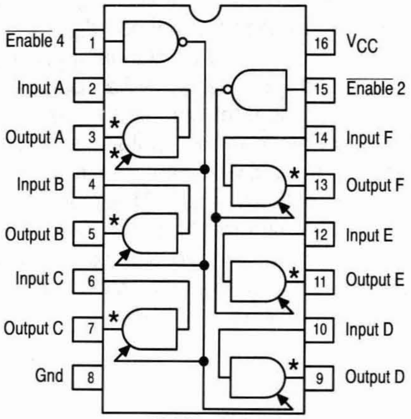

*Add inverter for MC6888/MC8T98.

MC8T97/MC6887# — Noninverting
MC8T98/MC6888# — Inverting

#These devices may be ordered by either of the paired numbers.

Microprocessor Data Bus Extenders

Driver Characteristics		Receiver Characteristics				
Output Current (mA)	Propagation Delay Max (ns)	Propagation Delay Max (ns)	Transceivers Per Package	Device	Suffix/ Package	Comments
48	14	14	4	MC8T26A (MC6880A)	P/648 L/620	Inverting Logic

Single-Ended Bus Transceivers

For Instrumentation Bus, Meets GPIB/IEEE Standard 488

Driver Characteristics		Receiver Characteristics				
Output Current (mA)	Propagation Delay Max (ns)	Propagation Delay Max (ns)	Transceivers Per Package	Device	Suffix/ Package	Comments
48	50	50	4	MC3446A	P/648	MOS compatible, input hysteresis
	30		8	MC3447	P3/724 L/623 P/649	Input hysteresis, open collector, 3-state outputs with terminations
	17	25	4	MC3448A	P/648 D/751B L/620	Input hysteresis, open collector, 3-state outputs with terminations

For High-Current Party-Line Bus for Industrial and Data Communications

100	15	15	4	MC26S10	P/648 D/751B L/620	Open collector, outputs, common enable

Line Receivers

General Purpose

S = Single Ended D = Differential	Type* of Output	t_{prop} Delay Time Max (ns)	Party Line Operation	Strobe or Enable	Power Supplies (V)	Device	Suffix/ Package	Receivers Per Package	Companion Drivers	Comments
D	TP OC	25	✓	✓	± 5.0	MC3450 MC3452	D/751B P/648 L/620	4	MC3453	Quad version of MC75107/108
	TP OC		✓	✓		MC75107 MC75108	P/646 L/632	2	MC75S110	Dual version of MC3450/2
S	TP	30	✓	✓	+ 5.0	MC3437	P/648 L/620	6		Input hysteresis

*OC = Open Collector, TP = Totem-pole output

EIA Standard

S = Single Ended D = Differential	Type* of Output	t_{prop} Delay Time Max (ns)	Party Line Operation	Strobe or Enable	Power Supplies (V)	Device	Suffix/ Package	Receivers Per Package	Companion Drivers	Comments
S	TP	4000	—	—	+ 5.0	MC14C89B MC14C89AB	P/646 D/751A	4	MC14C88B	EIA-232-D/ EIA-562
S	R	85	—	—		MC1489 MC1489A	D/751A P/646 L/632		MC1488	EIA-232-D
S, D	TP	30	✓	✓		AM26LS32 MC3486	P/648 D/751B L/620		AM26LS31 MC3487	EIA-422/423
		35	✓	✓		SN75173 SN75175	N/648 D/751B J/620		MC75172B MC75174B	EIA-422/423/ 485

*R = Resistor Pull-up, TP = Totem-pole output

Line Drivers

General Purpose

Output Current Capability (mA)	t_{prop} Delay Time Max (ns)	S = Single Ended D = Differential	Party Line Operation	Strobe or Enable	Power Supplies (V)	Device	Suffix/ Package	Drivers Per Package	Companion Receivers	Comments
15	15	D	✓	✓	± 5.0	MC3453	P/648 L/620	4	MC3450 MC3452	Quad version of MC75S110
			✓	✓		MC75S110	P/646 L/632	2	MC75107 MC75108	Dual version of MC3453

360/370 I/O Interface

Output Current Capability (mA)	t_{prop} Delay Time Max (ns)	S = Single Ended D = Differential	Party Line Operation	Strobe or Enable	Power Supplies (V)	Device	Suffix/ Package	Drivers Per Package	Companion Receivers	Comments
60	45	S	✓	✓	+ 5.0	MC3481	P/648 L/620	4		Short circuit Fault flag
			✓	✓		MC3485	P/648			

EIA Standard

Output Current Capability (mA)	t_{prop} Delay Time Max (ns)	S = Single Ended D = Differential	Party Line Operation	Strobe or Enable	Power Supplies (V)	Device	Suffix/ Package	Drivers Per Package	Companion Receivers	Comments
85	35	D	✓	✓	+ 5.0	MC75172B MC75174B	N/648 J/620	4	SN75173 SN75175	EIA-485
48	20		✓	✓		MC3487	P/648 D/751B L/620		MC3486	EIA-422 with 3-state outputs
			✓	✓		AM26LS31	PC/648 DC/620		AM26LS32	
						MC26LS31	D/751B		MC26LS32	
20		S	—	—	± 12	MC3488A (μA9636A)	P1/626 D/751B U/693	2	MC3486 AM26L532	EIA-423/232-D
15	3500				± 7.0 to ± 12	MC14C88B	P/646 D/751A	4	MC14C89B MC14C89AB	EIA-232-D/ EIA-562
10	350				± 9.0 to ± 12	MC1488	P/646 D/751A L/632		MC1489 MC1489A	EIA-232-D
60	300	S/D		422 ✓ 423 —	± 5.0	AM26LS30	PC/648	2 (422) 4 (423)	AM26LS32 MC3486	EIA-422 EIA-423
						MC26LS30	D/751B		MC26LS32	Switchable

Line Transceivers

Driver Prop Delay (Max ns)	Receiver Prop Delay (Max ns)	DE = Driver Enable RE = Receiver Enable	Party Line Operation	Power Supplies (V)	Device	Suffix/ Package	Drivers Per Package	Receivers Per Package	EIA Standard
20	30	DE, RE	✓	+ 5.0	MC34050	L/620 D/751B P/648	2	2	EIA-422
		DE	✓		MC34051	L/620 P/648			
	20	DE, RE	✓		MC75176B	P/626	1	1	EIA-485

EIA-232-D/V.28 CMOS Drivers/Receivers

Device	Suffix/ Package	Pins	Drivers	Receivers	Power Supplies (V)	Features
MC145403	P/738 DW/751D	20	3	5	± 5.0 ± 12	
MC145404			4	4		
MC145405			5	3		
MC145406	P/648 DW/751G	16	3			
MC145407	P/738 DW/751D	20			+ 5.0	Charge Pump
MC145408	P/724 DW/751E	24	5	5	± 5.0 ± 12	
MC145705	P/738 DW/751D	20	2	3	+ 5.0	Charge Pump, Power Down
MC145706			3	2		
MC145707	P/724 DW/751E	24		3		

Peripheral Drivers

Output Current Capability (mA)	Input Capability	Propagation Delay Time Max (μs)	Output Clamp Diode	Off State Voltage Max (V)	Device	Drivers Per Package	Suffix/ Package	Logic Function
300	TTL, DTL	1.0	✓	70	MC1472	2	P1/626 U/693	NAND
500	TTL, CMOS, PMOS				ULN2801	8	A/707	Invert
	14 V to 25 V PMOS			50	ULN2802			
	TTL, CMOS				ULN2803			
	6.0 V to 15 V MOS				ULN2804			
	TTL, CMOS PMOS				MC1411,B (ULN2001A)	7	P/648	
	14 V to 25 V PMOS				MC1412,B (ULN2002A)			
	TTL, 5.0 V CMOS				MC1413,B (ULN2003A)			
	8.0 V to 18 V MOS				MC1416,B (ULN2004A)			
1500	TTL, 5.0 V CMOS				ULN2068B	4	B/648C	

CMOS Display Drivers

These CMOS devices include digit as well as matrix drivers for LEDs, LCDs, and VFDs. They find applications over a wide range of end equipment such as instruments, automotive dash boards, home computers, appliances, radios and clocks.

Display Drivers

Display Type	Input Format	Drive Capability Per Package	On-Chip Latch	Display Control	Segment Drive Current	Device
LCD (Direct Drive)	Parallel BCD	7 Segments	✓	Blank	≈ 1.0 mA	MC14543B
LCD (Direct Drive)	Parallel BCD	7 Segments	✓	Blank, Ripple Blank	≈ 1.0 mA	MC14544B
LCD (Direct Drive)	Serial Binary [Compatible with the Serial Peripheral Interface (SPI) on CMOS MCUs]	33 Segments or Dots	✓		20 μA	MC145453
Muxed LCD (1/4 Mux)	Serial Binary [Compatible with the Serial Peripheral Interface (SPI) on CMOS MCUs]	48 Segments or Dots	✓		≈ 200 μA	MC145000
Muxed LCD (1/4 Mux)	Serial Binary [Compatible with the Serial Peripheral Interface (SPI) on CMOS MCUs]	44 Segments or Dots	✓		≈ 200 μA	MC145001
LED, Incandescent, Fluorescent*	Parallel BCD	7 Segments	✓	Blank, Lamp Test	25 mA	MC14511B
LED, Incandescent, Fluorescent*	Parallel BCD	7 Segments	✓	Blank, Ripple Blank, Lamp Test	25 mA	MC14513B
LED, Incandescent, Fluorescent*	Parallel BCD	7 Segments		Blank	65 mA	MC14547B
Muxed LED (1/4 Mux)	Serial Binary [Compatible with the Serial Peripheral Interface (SPI) on CMOS MCUs]	4 Digits + Decimals	✓	Oscillator (Scanner)	50 mA (Peak)	MC14499
Muxed LED (1/5 Mux)	Serial Binary [Compatible with the Serial Peripheral Interface (SPI) on CMOS MCUs]	5 Characters + Decimals or 25 Lamps	✓	Oscillator (Scanner), Low-Power Mode, Dimming	0 to 35 mA (Peak) Adjustable	MC14489
LED (Direct Drive)	Parallel Hex	7 Segments + A thru F Indicator	✓		10 mA**	MC14495♦1
(Interfaces to Display Drivers)	Parallel BCD	7 Segments		Ripple Blank, Enable		MC14558B

*Absolute maximum working voltage = 18 V
**On-chip current-limiting resistor

Functions

Device	Function	Package
MC14489	Multi-Character LED Display/Lamp Driver	738, 751D
MC14495♦1	Hexadecimal-to-7 Segment Latch/Decoder ROM/Driver	648, 751G
MC14499	4-Digit 7-Segment LED Display Decoder/Driver with Serial Interface	707, 751D
MC14511B	BCD-to-7-Segment Latch/Decoder/Driver	620, 648
MC14513B	BCD-to-7-Segment Latch/Decoder/Driver with Ripple Blanking	726, 707
MC14543B	BCD-to-7-Segment Latch/Decoder/Driver for Liquid Crystals	620, 648
MC14544B	BCD-to-7-Segment Latch/Decoder/Driver with Ripple Blanking	726, 707
MC14547B	High-Current BCD-to-7-Segment Decoder/Driver	620, 648
MC14558B	BCD-to-7-Segment Decoder	620, 648
MC145000	48-Segment Serial Input Multiplexed LCD Driver (Master)	709, 776
MC145001	44-Segment Serial Input Multiplexed LCD Driver (Slave)	707, 776
MC145453	33-Segment, Non-Multiplexed LCD Driver with Serial Interface	711, 777

♦Replace ♦ with package identifier (see product data).

Interface Package Overview

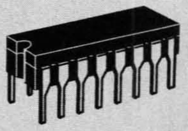

CASE 620
CERAMIC
D, DC, J, L SUFFIX

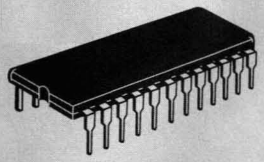

CASE 623
CERAMIC
L SUFFIX

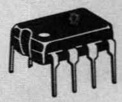

CASE 626
PLASTIC
P1 SUFFIX

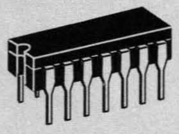

CASE 632
CERAMIC
L SUFFIX

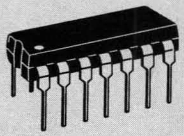

CASE 646
PLASTIC
P SUFFIX

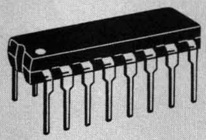

CASE 648, 648C
PLASTIC
B, N, P, PC SUFFIX

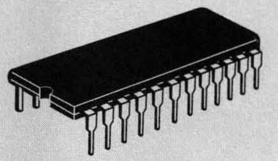

CASE 649
PLASTIC
P SUFFIX

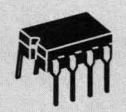

CASE 693
CERAMIC
U SUFFIX

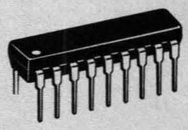

CASE 707
PLASTIC
A SUFFIX

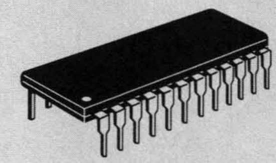

CASE 709
PLASTIC
P SUFFIX

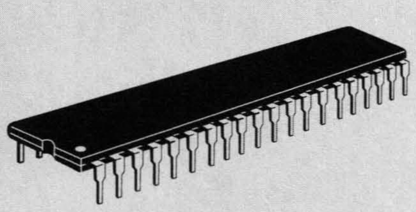

CASE 711
PLASTIC
P SUFFIX

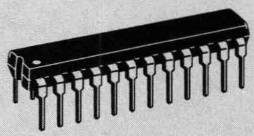

CASE 724
PLASTIC
P3 SUFFIX

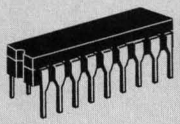

CASE 726
CERAMIC
L SUFFIX

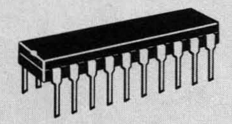

CASE 738
PLASTIC
P SUFFIX

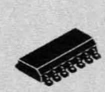

CASE 751A
PLASTIC
D SUFFIX

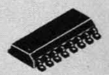

CASE 751B
PLASTIC
D SUFFIX

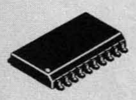

CASE 751D
PLASTIC
DW SUFFIX

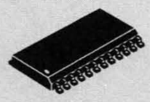

CASE 751E
PLASTIC
DW SUFFIX

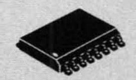

CASE 751G
PLASTIC
DW SUFFIX

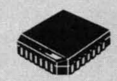

CASE 776
PLASTIC
FN SUFFIX

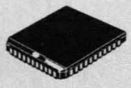

CASE 777
PLASTIC
FN SUFFIX

Communication Circuits

In Brief . . .

RF

Radio communication has greatly expanded its scope in the past several years. Once dominated by public safety radio, the 30 to 1000 MHz spectrum is now packed with personal and low cost business radio systems. The vast majority of this equipment uses FM or FSK modulation and is targeted at short range applications. From mobile phones and VHF marine radios to garage door openers and radio controlled toys, these new systems have become a part of our lifestyle. Motorola Linear has focused on this technology, adding a wide array of new products including complete receivers processed in our exclusive 3 GHz MOSAIC® 1.5 process. New surface mount packages for high density assembly are available for all of these products, as is a growing family of supporting applications notes and development kits.

Telephone & Voice/Data

Traditionally, an office environment has utilized two distinctly separate wired communications systems — Telecommunications and Data communications. Each had its individual hardware components complement, and each required its own independent transmission line system: twisted wire pairs for Telecom and relatively high priced coaxial cable for Datacom. But times have changed. Today, Telecom and Datacom coexist comfortably on inexpensive twisted wire pairs and use a significant number of components in common. This has led to the development and enhancement of PBX (Private Branch Exchanges) to the point where the long heralded "office of the future," with simultaneous voice and data communications capability at each station, is no longer of the future at all. The capability is here today!

Motorola Semiconductor serves a wide range of requirements for the voice/data marketplace. We offer both CMOS and Linear technologies, each to its best advantage, to upgrade the conventional analog voice systems and establish new capabilities in digital communications. Early products, such as the solid-state single-chip crosspoint switch, the more recent monolithic Subscriber-Loop-Interface Circuit (SLIC), a single-chip Codec/Filter (Mono-Circuit), the latest Universal Digital Loop Transceivers (UDLT), and single-chip telephone circuits are just a few examples of Motorola leadership in the voice/data area.

Page

RF Communications 4.7-2

Telecommunications 4.7-6

Phase-Locked Loop Components 4.7-22

Package Overview 4.7-24

Communication Circuits

RF Communications
- Wideband 4.7-2
- Wideband Single Conversion Receivers 4.7-2
- Narrowband Single Conversion Receivers 4.7-2
- Narrowband Dual Conversion Receivers 4.7-3
- Transmitters 4.7-3
- Balanced Modulator/Demodulator 4.7-3

Telecommunications
- PBX Architecture (Analog Transmission) 4.7-6
  - PCM Mono-Circuits 4.7-6
  - Codec-Filter/ADPCM Transcoder Evaluation Kit 4.7-7
  - Dual Tone Multiple Frequency Receiver 4.7-7
  - Crosspoint Switches 4.7-7
- Subscriber Loop Interface Circuit (SLIC) 4.7-8
- ISDN Voice/Data Circuits 4.7-9
  - U-Interface Transceiver 4.7-9
  - S/T-Interface Transceivers 4.7-9
  - Dual Data Link Controller 4.7-10
  - U-Interface Transceiver Evaluation Kit 4.7-10
- Voice/Data Communication (Digital Transmission) 4.7-11
  - Universal Digital Loop Transceiver (UDLT) .. 4.7-11
  - Data Set Interface Circuit (DSI) 4.7-12
- Electronic Telephone 4.7-13
- Audio Control Circuit 4.7-13
- Dial Circuits 4.7-13
- Tone Ringers 4.7-14
- Speech Networks 4.7-15
- Speakerphone 4.7-16
- Telephone Accessory Circuits 4.7-18
- Modems 4.7-19
- Bit Rate Generators 4.7-19
- ADPCM Transcoder 4.7-19
- Calling Line Identification Receiver with Ring Detector 4.7-20
- Calling Line I.D. Receiver Evaluation Kit 4.7-20
- CVSD Modulator/Demodulator 4.7-21

Phase-Locked Loop Components
- PLL Frequency Synthesizers 4.7-22
- Additional Phase-Locked Loop Functions 4.7-23

Package Overview 4.7-24

RF Communications

Wideband (FM/FSK) IFs

Device	V_{CC}	I_{CC}	Sensitivity	IF	Mute	RSSI	Max Data Rate	Notes	Package	Suffix/ Case
MC13055	3–12 V	25 mA	20 µV	40 MHz	✓	✓	2 Mb	Wideband Data IF	16 Pin DIP SO-16	P/648 D/751B

Wideband Single Conversion Receivers — VHF

Device	V_{CC}	I_{CC}	Sensitivity	RF Input	IF	Mute	RSSI	Max Data Rate	Notes	Package	Suffix/ Case
MC3356	3–9 V	25 mA	30 µV	200 MHz	10.7 MHz	✓	✓	500 kb	Includes front end mixer/L.O.	20 Pin DIP SO-20L	P/738 DW/751D
MC13156	3–7 V	3 mA	0.7 µV		21.4 MHz	—		5 Mb	Wideband Split IF	SO-24L	DW/751E

Narrowband Single Conversion Receivers — VHF

Device	V_{CC}	I_{CC}	Sensitivity	RF Input	IF	Mute	RSSI	Max Data Rate	Notes	Package	Suffix/ Case
MC3357	4–8 V	5 mA	5 µV	45 MHz	455 kHz	✓	—	—	Ceramic Quad Detector/ Resonator	16 Pin DIP	P/648
MC3359	4–9 V	7 mA	2 µV						Scan output option	18 Pin DIP SO-20L	P/707 DW/751D
MC3361B	2–8 V	6 mA		60 MHz					Lowest cost receiver	16 Pin DIP SO-16	P648 D/751B
MC3367	1–5 V	1 mA	1 µV	75 MHz			—	1.2 kb	1 Cell Operation	SO-28L	DW/751F
MC3371	2–8 V	6 mA	2 µV	60 MHz			✓	—	RSSI	16 pin DIP SO-16	P/648 D/751B
MC3372									RSSI, Ceramic Quad Detector/ Resonator		
MC13101	3–6 V	4 mA	0.7 µV	50 MHz					Split IF	SO-16	D/7851B

Narrowband Dual Conversion Receivers — FM/FSK — VHF

Device	V_{CC}	I_{CC}	Sensitivity	RF Input	IF1	IF2 (Limiter In)	Mute	RSSI	Data Rate	Notes	Package	Suffix/ Case
MC3362	2–7 V	3 mA	0.65 µV	180 MHz	10.7 MHz	455 kHz	—	✓	> 4.8 kb	Includes buffered VCO output	24 Pin DIP SO-24L	P/724 DW/751E
MC3363		4 mA	0.35 µV				✓			Includes RF amp/ Mute	SO-28L	DW/751F
MC3335			0.65 µV							Low cost version	SO-20L	DW/751 D
MC13135	3–7 V		0.7 µV	300 MHz			—		> 50 kb	Voltage Buffered RSSI	SO-24L	DW/751E

Transmitters — AM/FM/FSK

Device	V_{CC}	I_{CC}	P_{out}	Max RF Freq Out	Max Mod Freq	Notes	Package	Suffix/ Case
MC2831A	3–8 V	5 mA	–30 dBm	50 MHz	50 kHz	FM Transmitter. Includes low battery checker, tone oscillator	16 Pin DIP SO-16	P/648 D/751B
MC2833		10 mA	–30 dBm to +10 dBm	150 MHz		FM Transmitter. Includes two frequency multiplier/amplifier transistors		
MC13175	3–6 V	40 mA	8.0 dBm	500 MHz	5 MHz (AM)	AM Transmitter. Single frequency PLL $f_{out} = 8 \times f_{ref}$	SO-16	D/751B

Balanced Modulator/Demodulator

Device	V_{CC}	I_{CC}	Function	Package	Suffix/ Case
MC1596 MC1496	5-30 V	10 mA	Carrier Balance >50 dB General purpose balanced modulator/ demodulator for AM, SSB, FM Detection	14 Pin DIL, DIP, SO-14	L/632 P/646 D/751A

Low Power FM Transmitter System

MC2833 T_A, = –30° to +75°C, Case 648, 751B

- Complete VHF FM Transmitter/Exciter
- Mike Preamp with Limiting
- Tone Generator for CTSS or AFSK
- Crystal or L-C VCO Operation
- Buffer/Multiplier Output Stage
- Two Multiplier/Amplifier Stages
- Operates to 150+ MHz

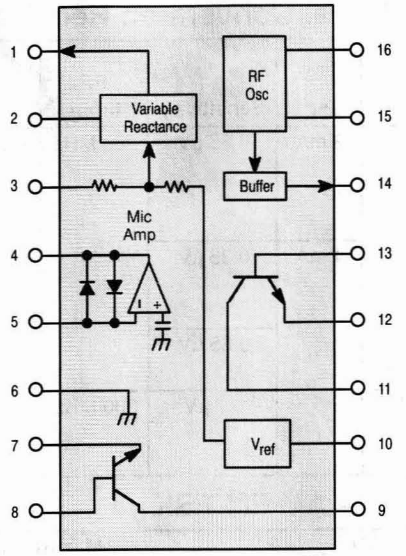

MOSAIC® 1.5 VHF Narrowband Dual-Conversion Receiver

MC3363 T_A = –40° to +85°C, Case 751F

- Operation to 180 MHz
- 2.0 to 8.0 Vdc Supply
- <0.5 µV for 20 dB Quieting Sensitivity
- Analog and Data Modulation Recovery
- >60 dB Dynamic Range RSSI
- Crystal or VCO First L.O. Operation
- On-Chip RF Amp/MC3363

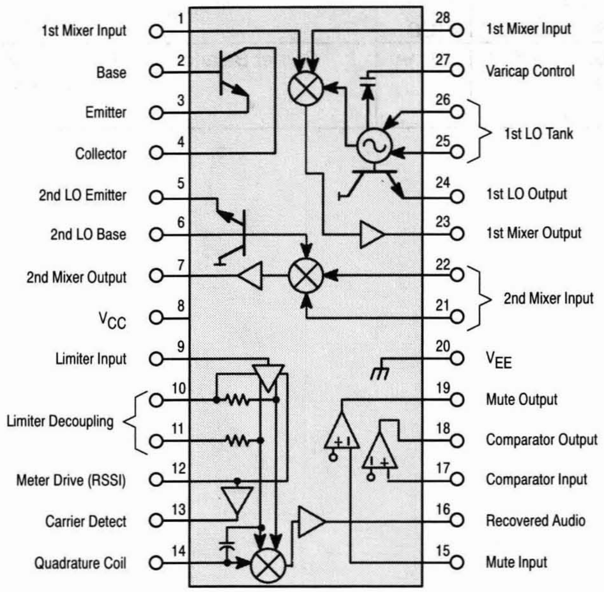

Low Voltage FM Narrowband Receiver

MC3367 T_A = 0° to +70°C, Case 751F

- Single Cell Operation to 0.9 V_{CC}
- Single Conversion Operation to 75 MHz
- Current Drain of 1.0 mA
- Split IF Amplifier for Single or Dual Filters
- Analog and Data Outputs
- Sensitivity of 0.7 µV Typ for 20 dB Quieting
- Low Battery Voltage Indicator

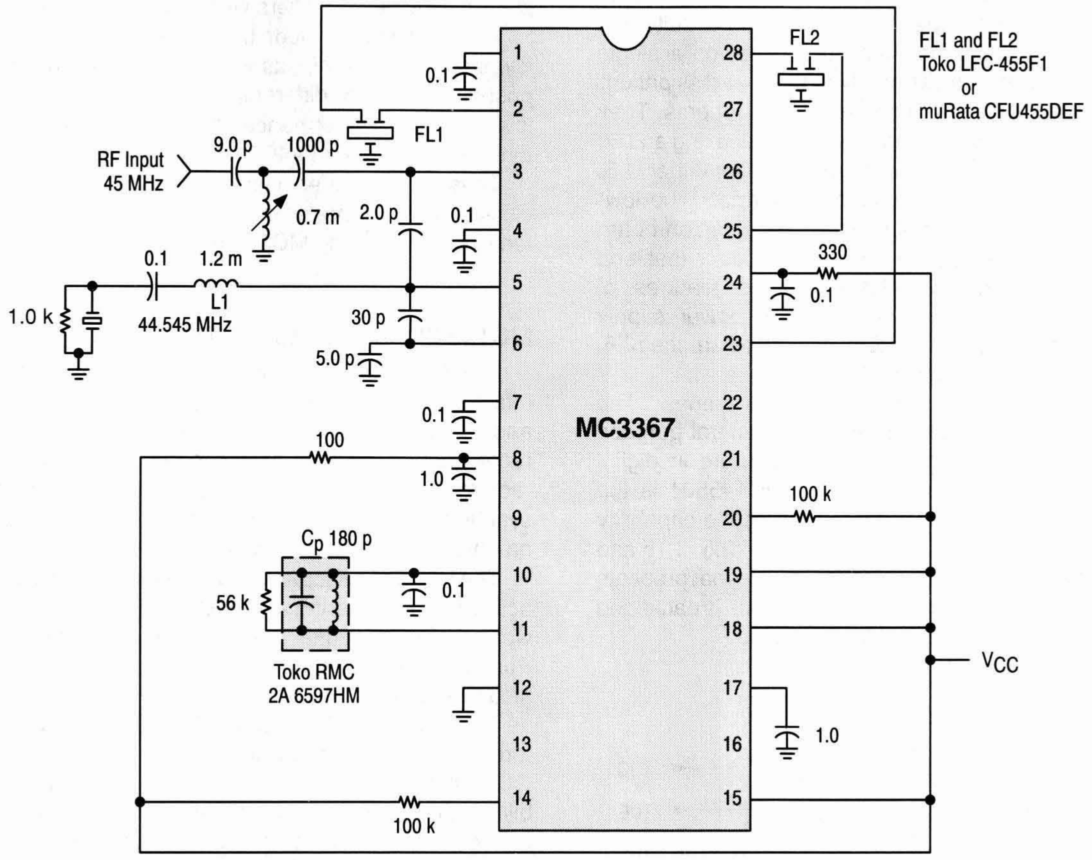

(All capacitors in µF unless otherwise stated, resistors in ohms, inductors in Henries.)

Telecommunications

PBX Architecture (Analog Transmission)

PCM Mono-Circuits Codec-Filters (CMOS LSI)

MC145500 Series Case 620, 648, 708, 726, 736, 751, 776

The Mono-circuits perform the digitizing and restoration of the analog signals. In addition to these important functions, Motorola's family of pulse-code modulation mono-circuits also provides the band-limiting filter functions — all on a single monolithic CMOS chip with extremely low power dissipation.

The Mono-circuits require no external components. They incorporate the bandpass filter required for antialiasing and 60 Hz rejection, the A/D–D/A conversion functions for either U.S. Mu-Law or European A-Law companding formats, the low-pass filter required for reconstruction smoothing, an on-board precision voltage reference, and a variety of options that lend flexibility to circuit implementations. Unique features of Motorola's Mono-circuit family include wide power supply range (6 to 13 V) selectable on-board voltage reference (2.5, 3.1, or 3.8 V), and TTL or CMOS I/O interface.

Motorola supplies five versions in this series. The MC145500, MC145503 and MC145505 are general-purpose devices in 16-pin packages designed to operate in digital telephone or line card applications. The MC145501 is the same device (in an 18-pin package) that offers the capability of selecting from three peak overload voltages (2.5, 3.15 and 3.78 V). The MC145502 is the full-feature device that presents all of the options available on the chip. This device is packaged in a 22-pin DIP and 28-pin chip carrier package.

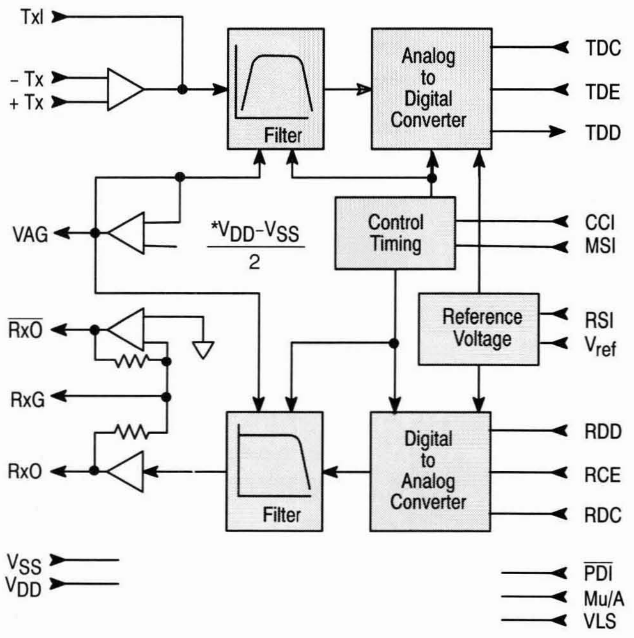

MC145554/57/64/67 Case 620, 648, 732, 738, 751D, 751G

These per channel PCM codec-filters perform the voice digitization and reconstruction as well as the band limiting and smoothing required for PCM systems. They are designed to operate in both synchronous and asynchronous applications and contain an on-chip precision voltage reference. The MC145554 (Mu-Law) and MC145557 (A-Law) are general purpose devices that are offered in 16-pin packages. The MC145564 (Mu-Law) and MC145567 (A-Law), offered in 20-pin packages, add the capability of analog loop-back and push-pull power amplifiers with adjustable gain.

All four devices include the transmit bandpass and receive lowpass filters on-chip, as well as active R-C pre-filtering and post-filtering. Fully differential analog circuit design assures lowest noise. Performance is specified over the extended temperature range of –40 to +85°C.

These PCM codec-filters accept both industry standard clock formats. They also maintain compatibility with Motorola's family of TSACs and MC3419/MC33120 SLIC products.

MC145480 Case 738, 751D

This 5-volt, general purpose per channel PCM codec-filter offers selectable Mu-Law or A-Law companding in 20-pin DIP and SOG packages. It performs the voice digitization and reconstruction as well as the band limiting and smoothing required for PCM systems. It is designed to operate in both synchronous and asynchronous applications and contains an on-chip precision reference voltage (1.575 V).

The transmit bandpass and receive lowpass filters, and the active R-C pre-filtering and post-filtering are incorporated, as well as fully differential analog circuit design for lowest noise. Push-pull 300-ohm power drivers with external gain adjust are also included.

The MC145480 PCM codec-filter accepts a variety of clock formats, including short-frame sync, long-frame sync, IDL, and GCI timing environments. This device also maintains compatibility with Motorola's family of Telecom products, including the MC145472 U Interface Transceiver, MC145474/75 S/T Interface Transceivers, the MC145532 ADPCM Transcoder, the MC145422/26 UDLT-1, the MC145421/25 UDLT-2, and the MC3419/MC33120 SLIC.

MC145540 (In development)

The MC145540 is a single-chip implementation of a PCM codec-filter and an ADPCM encoder/decoder. A serial control port and internal control and status registers permit a microcomputer to exercise many built-in features

Also Available — Filters:
MC145414 Dual Tuneable Low-Pass Sampled Data Filter
MC145432 2600 Hz Tone Signalling Filter

Codec-Filter/ADPCM Transcoder Evaluation Kit

MC145536EVK

The MC145536EVK is the primary tool for evaluation and demonstration of the MC145480 Single +5 V-supply PCM Codec-Filter and the MC145532 ADPCM Transcoder (see "Telephone Accessory Circuits"). The MC145536EVK provides the hardware needed to evaluate the many separate operating modes under which the MC145480 and MC145532 are intended to operate.

- Provides Stand Alone Evaluation on a Single Board
- Easily Interfaced to Test Equipment, Customer System, or Second MC145536EVK
- Convenient Access to Key Signals
- Generous Wire Wrap Area for Application Development
- The kit provides analog-to-analog, analog-to-digital (64K PCM, 32K ADPCM, 24K ADPCM, 16K ADPCM), or digital-to-analog (64K PCM, 32K ADPCM, 24K ADPCM, 16K ADPCM) connections
- Handset Included
- Schematics, Data Sheets, and User's Manual Included

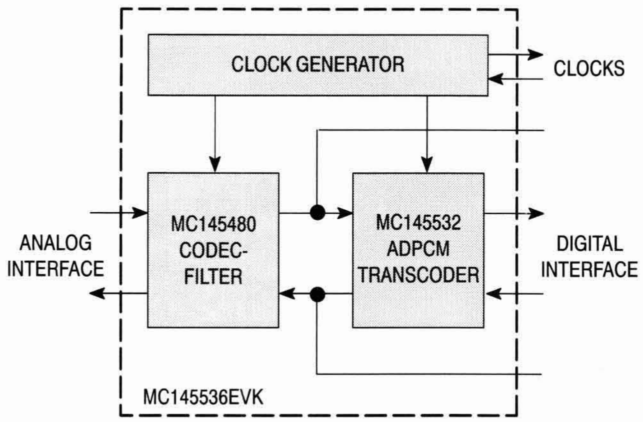

Dual Tone Multiple Frequency Receiver

MC145436 Case 646, 751

This device contains the filter and decoder for detection of a pair of tones conforming to the DTMF standard with outputs in hexadecimal. Switched capacitor filter technology is used together with digital circuitry for the timing control and output circuits. The MC145436 provides excellent power-line noise and dial tone rejection.

Crosspoint Switches

Crosspoint switches implemented with semiconductor technology take the place of the huge banks of mechanical relay matrices once utilized in Central Offices and PBXs.

Motorola's crosspoint switches have latches to control the state of any particular switch in order to route analog or digital signals. These ICs find applications in PBXs, key systems, and test equipment.

Device	Description	Suffix	Pins
MC142100	4 × 4 × 1 Analog Switch • 4.2 to 18 V Operation • Low On-State Resistance	CL, CP, DW (620, 648, 751G)	16 DIP 16 SO
MC145100	4 × 4 × 1 Analog Switch • 4.2 to 18 V Operation • Low On-State Resistance • Power On Reset	CP (648)	16 DIP

Subscriber Loop Interface Circuit (SLIC)

MC3419-1L T_A = 0° to +70°C, Case 726

The replacement of two-to-four wire conversion hybrid transformers in Central Office, PBX, and Subscriber Carrier equipment with the SLIC has resulted in major improvement in telephone equipment. The SLIC family performs this task, along with most other **BORSHT** functions required by signal transmission. These include the provision of DC power to the telephone (**B**attery); **O**vervoltage protection; **R**ing trip detection; **S**upervisory features such as hook status and dial pulsing; 2-to-4 wire conversion, suppression of longitudinal signals (**H**ybrid).

- All Key Parameters Externally Programmable
- Current Sensing Outputs Monitor Status of Both Tip and Ring Leads
- On-Hook Power Below 5.0 mW
- Digital Hook Status Output
- Power Down Input
- Ground Fault Protection
- Size and Weight Reduction Over Conventional Approaches
- The sale of this product is licensed under patent No. 4,004,109. All royalties related to this patent are included in the unit price.

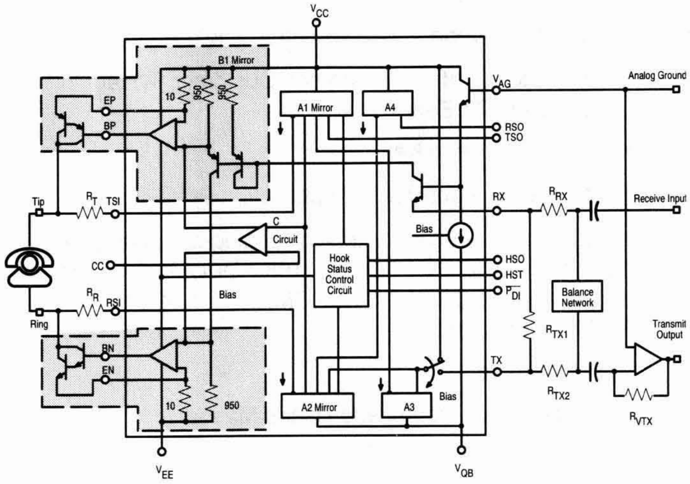

MC33120 T_A = –40° to +85°C, Case 738, 751D

With a guaranteed minimum longitudinal balance of 58 dB, the MC33120 is ideally suited for central office applications, as well as PBXs, and other related equipment. Protection and sensing components on the 2 wire side can be non-precision while achieving required system performance. Most BORSHT functions are provided while maintaining low power consumption, and a cost effective design. Size and weight reduction over conventional transformer designs permit a higher density system.

- All key parameters externally programmable with resistors:
  - Transmit and receive gains
  - Transhybrid loss
  - Return loss
  - DC loop current limit and battery feed resistance
  - Longitudinal Impedance
- Single and double fault sensing and protection
- Minimum 58 dB longitudinal balance (2 wire and 4 wire) guaranteed
- Digital Hook Status and Fault outputs
- Power Down input
- Loop Start or ground start operation
- Size and weight reduction over conventional approaches
- Available in 20 pin DIP and SOIC packages

ISDN Voice/Data Circuits

Integrated Services Digital Network

ISDN is the revolutionary concept of converting the present analog telephone networks to an end-to-end global digital network. ISDN standards make possible a wide variety of services and capabilities that are revolutionizing communications in virtually every industry.

Motorola's ISDN product family includes the MC145472 U-Interface Transceiver, the MC145474/75 S/T-Interface Transceivers, MC145488 Dual Data Link Controller, and the MC68302 Integrated Multi-Protocol Processor. These are supported by a host of related devices including the MC145500 family of single-chip codec/filters, MC145436 DTMF Decoder, MC33120 Subscriber Loop Interface Circuit, MC34129 Switching Power Supply Controller, MC145611 PCM Conference Circuit, and the MC145406/07 CMOS EIA 232-D Driver/Receiver family.

Motorola's key ISDN devices fit into four ISDN network applications: a digital subscriber line card, an NT1 network termination, an ISDN terminal adapter, and an ISDN terminal. Digital subscriber line cards are used in central offices, remote concentrators, channel banks, T1 multiplexers, and other switching equipment. The NT1 network termination block illustrates the simplicity of remote U to S/T-interface conversion. The ISDN terminal adapter and ISDN terminal block show how Motorola ICs are used to combine voice and data in PC compatible boards, digital telephones, and other terminal equipment. Expanded applications such as a PBX may include these and other Motorola ISDN circuits.

U-Interface Transceiver

MC145472 Case 847B

The MC145472 fully conforms to ANSI T1.601-1991, the North American standard for ISDN Basic Access on a single twisted-wire pair. The transceiver achieves a remarkable 10^{-7} bit error rate performance on all ANSI specified test loops with worst-case impairments present. The state-of-the-art 1.2 micron single-chip solution uses advanced design techniques to combine precision analog signal processing elements with three digital signal coprocessors to build an adaptively equalized echo cancelling receiver.

Two modes of handling U-interface maintenance functions are provided on the MC145472. In the automatic maintenance mode the U-interface transceiver handles all ANSI specified maintenance and channel procedures internally to minimize your software development effort. Automatic procedures include generating and monitoring the cyclic redundancy check, reporting and counting far end block errors (near end block errors too), handling the ACT and DEA bits, as well as monitoring and appropriately responding to embedded operations channel messages.

The optional manual maintenance mode lets you choose an inexpensive microcontroller, such as a member of Motorola's MC68HC05 family, to control and augment the standard maintenance channel functions. This flexible feature also allows for easy implementation of proprietary maintenance functions.

S/T-Interface Transceivers

MC145474 Case 736A
MC145475 Case 710, 751F

The MC145474/75 S/T-Interface Transceivers provide a CCITT I.430 compatible interface for use in line card, network termination, and ISDN terminal equipment applications. Manufactured with Motorola's advanced 1.5 micron CMOS mixed analog and digital process technology, the MC145474/75 is a physical layer device capable of operating in point-to-point or point-to-multipoint passive bus arrangements. In addition, the MC145475 can implement the optional NT1 Star topology.

This device features outstanding transmission performance. It reliably transmits over 2.5 kilometers in a point-to-point application with specifications of 1 kilometer. Comparable performance is achieved in all other topologies as well. Other features include pin selectable terminal or network operating modes, industry standard microprocessor serial control port, full support of the multiframing S and Q channels, a full range of loopbacks, and low power CMOS operation.

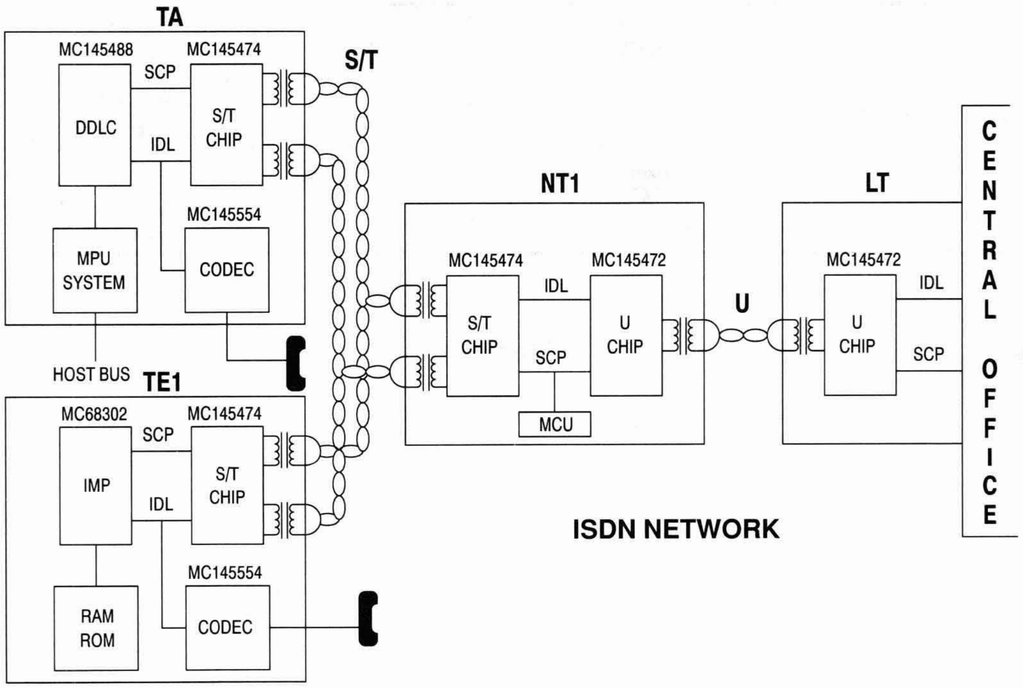

Dual Data Link Controller

MC145488 Case 779

The MC145488 features two full-duplex serial HDLC channels with an on-chip Direct Memory Access (DMA) controller. The DMA controller minimizes the number of microprocessor interrupts from the communications channels, freeing the micorprocessor's resources for other tasks. The DMA controller can access up to 64 k bytes of memory, and transfers either 8-bit bytes or 16-bit words to or from memory. The MC145488 DDLC is compatible with Motorola's MC68000 and other micoprocessors.

In a typical ISDN terminal application, one DDLC communications channel supports the D-channel (LAPD) while the other supports the B-channel (LAPB). While the DDLC is ideally suited for ISDN applications, it can support many other HDLC protocol applications as well.

Some of the powerful extras found on the DDLC include automatic abort and retransmit of D-channel collisions in S/T-interface applications, address recognition, automatic recovery mechanisms for faulty frame correction, and several system test modes. Address recognition provides a reduction in the host micorprocessor load by filtering data frames not addressed to the host. The DDLC can compare either SAPI or TEI fields of LAPD frames. For LAPD (Q.921) applications, both A and B addresses may be checked.

U-Interface Transceiver Evaluation Kit

MC145494EVK

This kit provides the hardware and software to evaluate the many configurations under which the MC145472 is able to operate. Used as a whole, it operates as both ends of the two-wire U interface that extends from the customer premises, NT1, to the switch line card, LT. The two halves of the board can be physically and functionally separated, providing independent NT1 and LT evaluation capability.

The kit provides the ability to interactively manipulate status registers in the MC145472 U-interface transceiver or in the MC145474/75 S/T interface transceiver with the aid of an external terminal. It can also be controlled using the MC68302 Integrated Multiprotocol Processor application development system to complete a total Basic Rate ISDN evaluation solution.

A generous wirewrap area is available to assist application development.

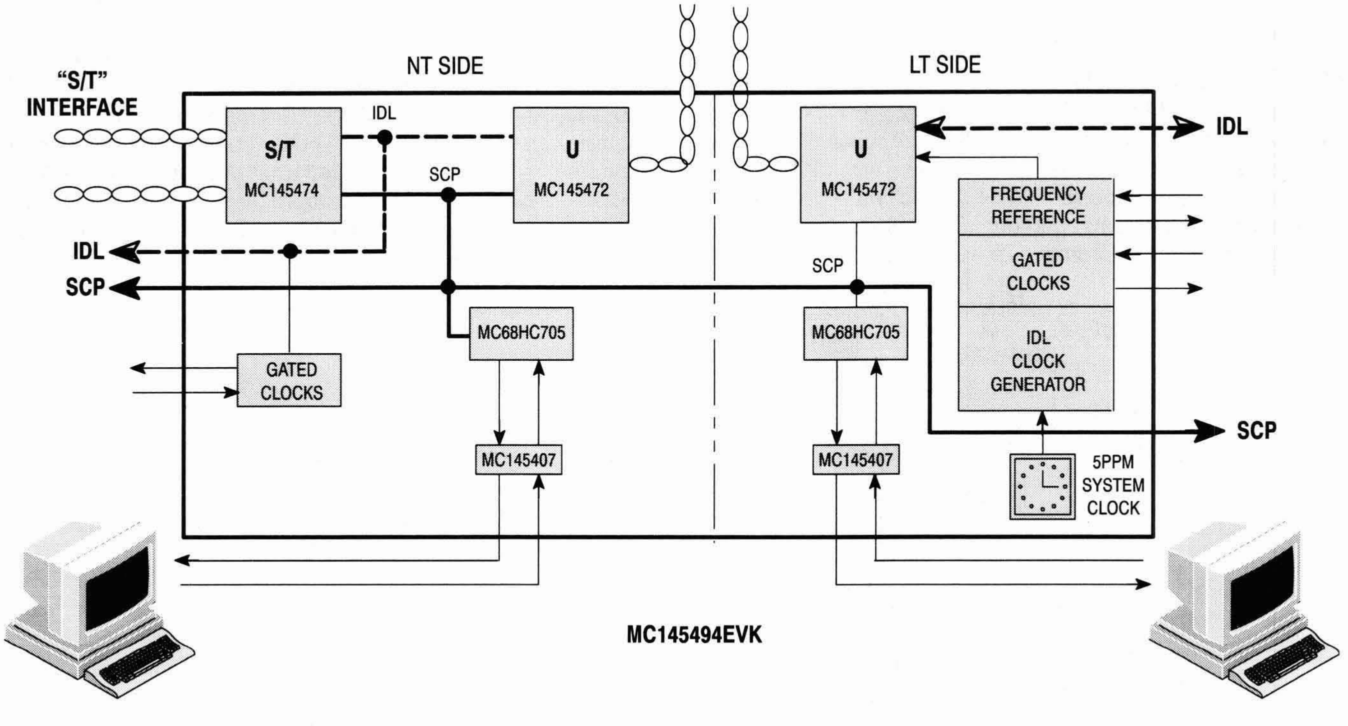

MC145494EVK

Voice/Data Communication (Digital Transmission)

2-Wire Universal Digital Loop Transceiver (UDLT)

MC145422 Master Station Case 708, 736, 751E
MC145426 Slave Station Case 708, 736, 751E

The UDLT family of transceivers allows the use of existing twisted-pair telephone lines (between conventional telephones and a PBX) for the transmission of digital data. With the UDLT, every voice-only telephone station in a PBX system can be upgraded to a digital telephone station that handles the complex voice/data communications with no increase in cabling costs.

In implementing a UDLT-based system the A/D — D/A conversion function associated with each telset is relocated from the PBX directly to the teleset. The SLIC (or its equivalent circuits) is eliminated since its signaling information is transmitted digitally between two UDLTs.

The UDLT master-slave system incorporates the modulation/demodulation functions that permit data communications over a distance up to 2 kilometers. It also provides the sequence control that governs the exchange of information between master and slave. Specifically, the master resides on the PBX line card where it transmits and receives data over the wire pair to the telset. The slave is located in the telset and interfaces the mono-circuit to the wire pair. Data transfer occurs in 10-bit bursts (8 bits of data and 2 signaling bits), with the master transmitting first, and the slave responding in a synchronized half-duplex transmission format.

UDLTs utilize a 256 kilobaud modified differential phase shift keyed (MDPSK) burst modulation technique for transmission to minimize radio frequency, electro-magnetic, and crosstalk interference. Implementation through CMOS technology takes advantage of low-power operation, increased reliability, and the proven capabilities to perform complex telecommunications functions.

Functional Features — Both Devices

- Provides Synchronous Duplex 64 Kilobits/Second Voice/Data Channel and Two 8 Kilobits/Second Signaling Data Channels Over One 26 AWG Wire Pair Up to 2 Kilometers
- Compatible with Existing and Evolving Telephone Switch Architectures and Call Signaling Schemes
- Automatic Detection Threshold Adjustment for Optimum Performance Over Varying Signal Attenuations
- Protocol Independent
- Single 5.0 V to 8.0 V Power Supply

MC145422 Features

- 2.048 MHz Master Clock
- Pin Controlled Power-Down and Loop-Back Features
- Variable Data Clock — 64 kHz to 2.56 MHz
- Pin Controlled Insertion/Extraction of 8 Kilobits/Seconds Channel into LSB of 64 Kilobits/Second Channel for Simultaneous Routing of Voice and Data Through PCM Voice Path of Telephone Switch

MC145426 Features

- Compatible with MC145500 Series PCM Mono-Circuits
- Automatic Power-Up/Down Feature
- On-Chip Data Clock Recovery and Generation
- Pin Controlled 500 Hz D3 or CCITT Format PCM Tone Generator for Audible Feedback Applications

UDLT BLOCK DIAGRAM

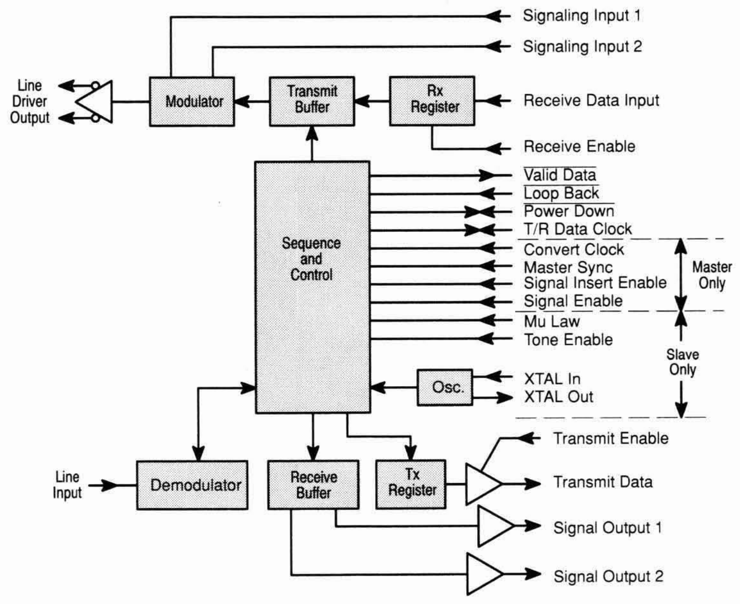

2-Wire ISDN Universal Digital Loop Transceiver II (UDLT II)

MC145421 Master Case 623, 709, 751E
MC145425 Slave Case 623, 709, 751E

Similar to the MC145422/26 UDLT, but provide 160 kbps in two 64 kbps and two 16 kbps (2B + 2D) format.

Data Set Interface Circuit (DSI)

MC145428 T_A = –40° to + 85°C, Case 738, 751D

This new CMOS LSI circuit provides asynchronous-to-synchronous data conversion. It is particularly well-suited for use in conjunction with a UDLT-based integrated voice/data system. The MC145428 DSI provides EIA-232-to-time slot data conversion that permits direct interface between existing data equipment and the UDLT without modifications. With this interactive component, digitized voice information from the PCM Mono-Circuit and asynchronous data from computers or terminals can be transmitted simultaneously through a synchronous switching network.

DSI circuits are also suited for data multiplexers, concentrators and deconcentrators, data rate changers, data-only switching, and PBX-based local area networks.

MC145428 Features

- Up to 128 kbps asynchronous data rate operation
- 0 up to 2.1 Mbps synchronous data rate operation
- On-board bit rate clock generator with pin selectable bit rates of 300, 1200, 2400, 4800, 9600, 19200, and 38400 bps or an externally supplied 16 times bit rate clock may be used
- Accepts asynchronous data words of 8 or 9 bits
- False start detection provided
- Automatic sync insertion and checking

Data Set Interface Circuit

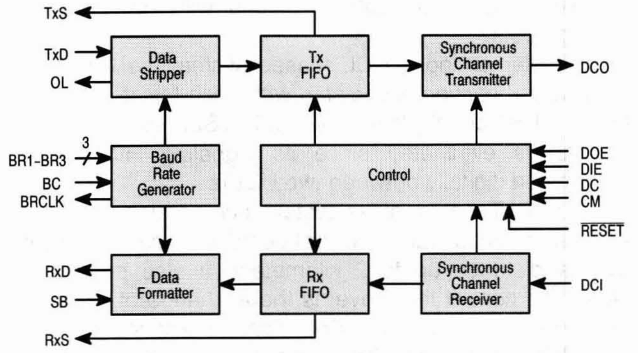

Electronic Telephone

The Complete Electronic Telephone Circuit

MC34010/11A T_A = –20° to +60°C, Case 711, 777

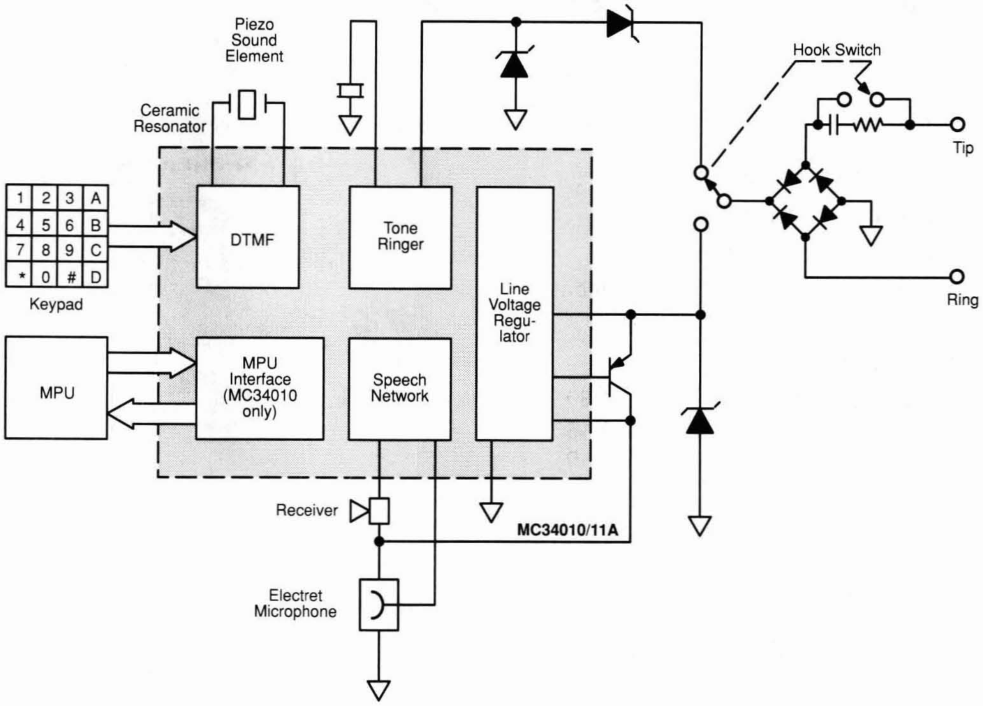

The conventional transformer-driven telephone handset is undergoing major innovations. The bulky transformer is disappearing. So are many of its discrete components, including the familiar telephone bell. They are being replaced with integrated circuits that perform all the major handset functions simply, reliably and inexpensively . . . functions such as 2-to-4 wire conversion, DTMF dialing, tone ringing, and a variety of related activities.

The culmination of these capabilities is the Electronic Telephone Circuit, the MC34010/11A. These ICs place all of the above mentioned functions on a single monolithic chip.

These telephone circuits utilize advanced bipolar linear (I^2L) technology and provide all the necessary elements of a modern tone-dialing telephone. The MC34010 even incorporates an MPU interface circuit for the inclusion of automatic dialing in the final system.

- Provides all basic telephone functions, including DTMF dialer, tone ringer, speech network and line voltage regulator
- DTMF generator uses low cost ceramic resonator with accurate frequency synthesis technique
- Tone ringer drives piezoelectric transducer and satisfies EIA-470 requirements
- Speech network provides 2-to-4 wire conversion with adjustable sidetone utilizing an electret transmitter
- On-chip regulator insures stable operation over wide range of loop lengths
- I^2L technology provides low 1.4 V operation and high static discharge immunity
- MC34010P provides microprocessor interface port for automatic dialing features

Also Available — a broad line of additional telephone components for customizing systems design.

Audio Control Circuit

MC145429 Telset audio interface circuit for MPU-controlled independent adjustment of ear piece, speaker and ringer volume.

Dial Circuits

MC145412/13/16 Integrated Tone/Pulse 10-number Repertory Dialer.

MC145512/13 Integrated Tone/Pulse 10-number Repertory Dialer.

Tone Ringers

The MC34012, MC34017, and MC34117 Tone Ringers are designed to replace the bulky bell assembly of a telephone, while providing the same function and performance under a variety of conditions. The operational requirements spelled out by the FCC and EIA-470, simply stated, are that a ringer circuit MUST function when a ringing signal is provided, and MUST NOT ring when other signals (speech, dialing, noise) are on the line. The tone ringers described below were designed to meet those requirements with a minimum of external components.

MC34012 T_A = –20° to +60°C, Case 626, 751

- Complete Telephone Bell Replacement
- On-Chip Diode Bridge and Transient Protection
- Single-Ended Output to Piezo Transducer
- Input Impedance Signature Meets Bell and EIA Standards
- Rejects Rotary Dial and Hook Switch Transients
- Adjustable Base Frequencies
- Output Frequency to Warble Ratio — MC34012-1:80
  MC34012-2:160
  MC34012-3:40

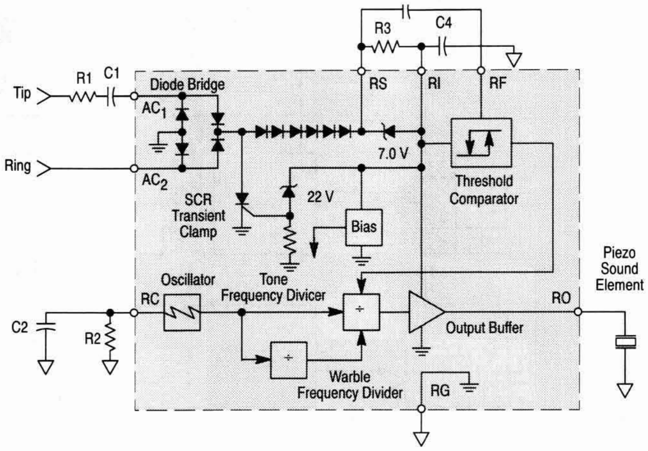

MC34017 T_A = –20° to +60°C, Case 626, 751

- Complete Telephone Bell Replacement
- On-Chip Diode Bridge and Transient Protection
- Differential Output to Piezo Transducer for Louder Sound
- Input Impedance Signature Meets Bell and EIA Standards
- Rejects Rotary Dial and Hook Switch Transients
- Output Frequency to Warble Ratio — MC34017-1:80
  MC34017-2:160
  MC34017-3:40

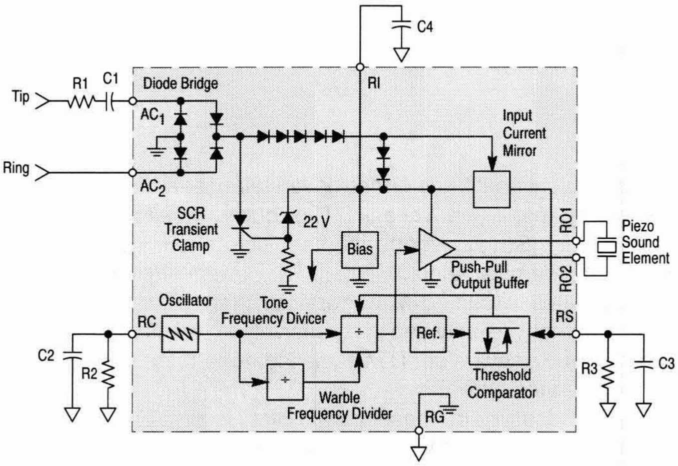

MC34117 T_A = –20° to +60°C, Case 626, 751

- Complete Telephone Bell Replacement
- External Diode Bridge
- Internal Transient Protection
- Differential Output to Piezo Transducer for Louder Sound
- Input Impedance Signature Meets Bell and EIA Standards
- Rejects Rotary Dial and Hook Switch Transients
- Base Frequency and Warble Frequencies are Independently Adjustable

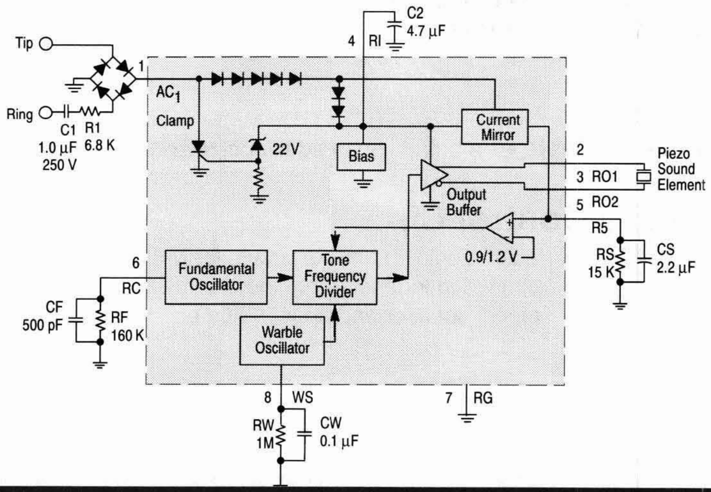

Speech Networks

Speech Network with Dialer Interface

MC34014 T_A = –20° to +60° C, Case 707, 751D

The MC34014 is a Telephone Speech Network integrated circuit which incorporates adjustable transmit, receive, and sidetone functions, line interface circuit, dialer interface, and a regulated output voltage for a dialer circuit. It includes an equalization circuit to compensate for various line lengths and the conversion from 2-to-4 wire is accomplished with supply voltages as low as 1.5 V.

- Transmit, Receive, and Sidetone Gains Set By External Resistors
- Loop Length Equalization for Transmit, Receive, and Sidetone Functions
- Operates Down to 1.5 V (V +) in Speech Mode
- Provides Regulated Voltage for CMOS Dialer
- Speech Amplifiers Muted During Pulse and Tone Dialing
- DTMF Output Level Adjustable with a Single-Resistor
- Compatible with 2-Terminal Electret Microphones
- Compatible with Receiver Impedances of 150 Ω and Higher

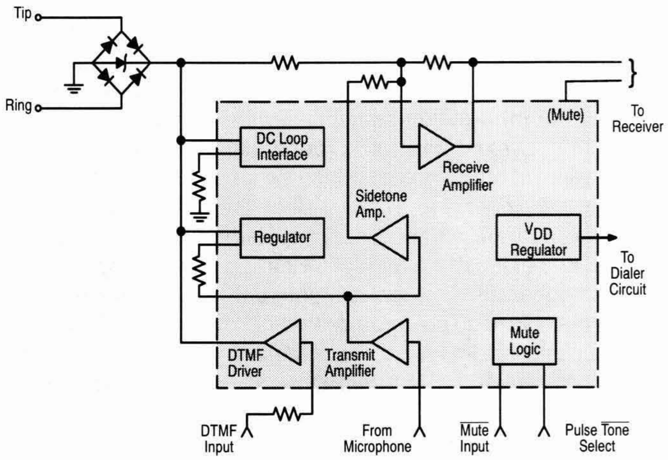

Telephone Speech Network with Dialer Interface

MC34114, MC34214 T_A = –20° to +70° C, Case 707, 751D

- Operation Down to 1.2 V
- Adjustable Transmit, Receive, and Sidetone Gains by External Resistors
- Differential Microphone Amplifier Input Minimizes RFI
- Transmit, Receive, and Sidetone Equalization on both Voice and DTMF Signals
- Regulated 1.7 V Output for Biasing Microphone
- Regulated 3.3 V Output for Powering External Dialer
- Microphone and Receive Amplifiers Muted During Dialing
- Differential Receive Amplifier Output Eliminates Coupling Capacitor
- Operates with Receiver Impedances of 150 Ω and Higher

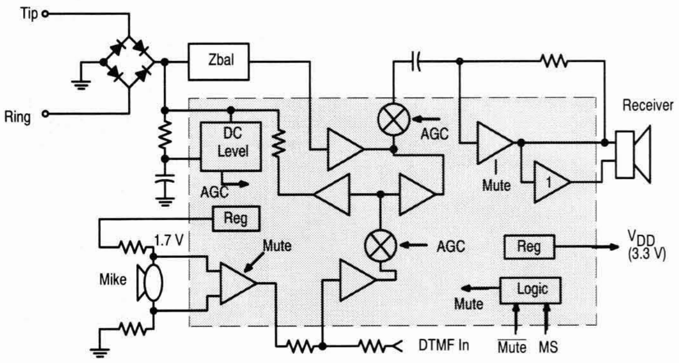

Speakerphone

Voice Switched Speakerphone Circuit

MC34018 T_A = –20° to +60°C, Case 710, 751F

The MC34018 Speakerphone integrated circuit incorporates the necessary amplifiers, attenuators, and control functions to produce a high quality hands-free speakerphone system. Included are a microphone amplifier, a power audio amplifier for the speaker, transmit and receive attenuators, a monitoring system for background sound level, and an attenuation control system which responds to the relative transmit and receive levels as well as the background level. Also included are all necessary regulated voltages for both internal and external circuitry, allowing line-powered operation (no additional power supplies required). A Chip Select pin allows the chip to be powered down when not in use. A volume control function may be implemented with an external potentiometer. MC34018 applications include speakerphones for household and business uses, intercom systems, automotive telephones, and others.

- All necessary level detection and attenuation controls for a hands-free telephone in a single integrated circuit
- Background noise level monitoring with long time constant
- Wide operating dynamic range through signal compression
- On-chip supply and reference voltage regulation
- Typical 100 mW output power (into 25 Ω) with peak limiting to minimize distortion
- Chip select pin for active/standby operation
- Linear volume control function

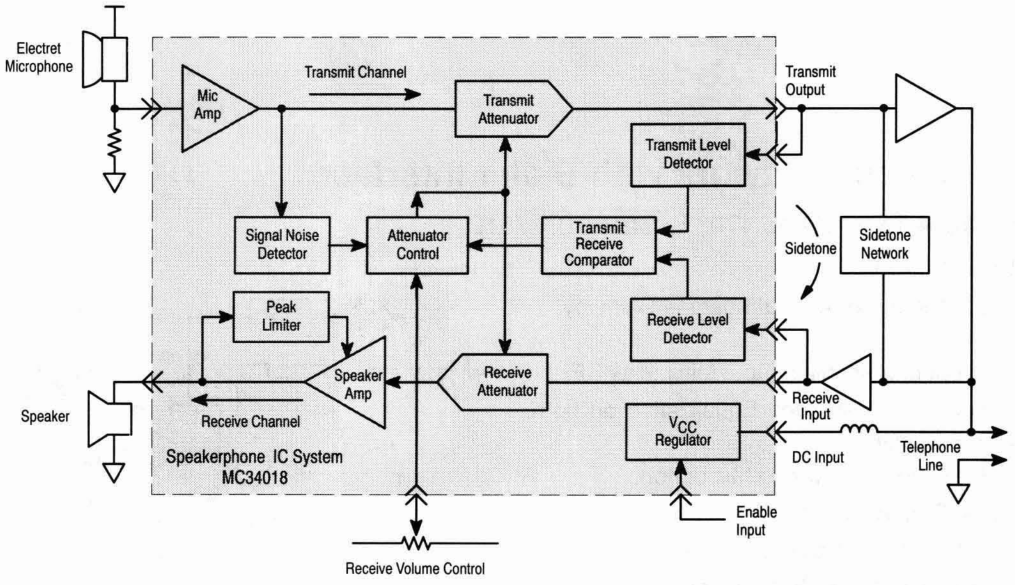

Voice Switched Speakerphone Circuit

MC34118 T_A = –20° to +60°C, Case 710, 751F

The MC34118 Voice Switched Speakerphone Circuit incorporates the necessary amplifiers, attenuators, level detectors, and control algorithm to form the heart of a high quality hands-free speakerphone system. Included are a microphone amplifier with adjustable gain and MUTE control, Transmit and Receive attenuators which operates in a complementary manner, level detectors at both input and output of both attenuators,and background noise monitors for both the transmit and receive channels. A Dial Tone Detector prevents the dial tone from being attenuated by the Receive background noise monitor circuit. Also included are two line driver amplifiers which can be used to form a hybrid network in conjunction with an external coupling transformer. A high-pass filter can be used to filter out 60 Hz noise in the receive channel, or for other filtering functions. A Chip Disable pin permits powering down the entire circuit to conserve power on long loops where loop current is at a minimum.

The MC34118 may be operated from a power supply, or it can be powered from the telephone line, requiring typically 5.0 mA. The MC34118 can be interfaced directly to Tip and Ring (through a coupling transformer) for stand-alone operation, or it can be used in conjunction with a handset speech network and/or other features of a featurephone.

- Improved attenuator gain range: 52 dB between transmit and receive
- Low voltage operation for line-powered applications (3.0 to 6.5 V)
- 4-Point signal sensing for improved sensitivity
- Background noise monitors for both transmit and receive paths
- Microphone amplifier gain set by external resistors — mute function included
- Chip disable for active/standby operation
- On board filter pinned-out for user defined function
- Dial tone detector inhibits receive idle mode during dial tone presence
- Compatible with MC34119 speaker amplifier

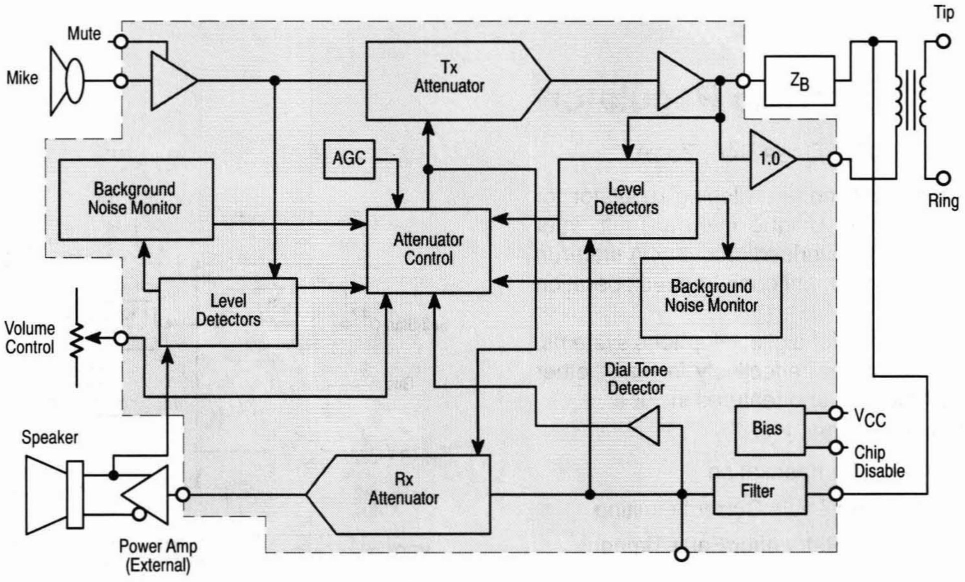

Telephone Accessory Circuits

Audio Amplifier

MC34119 T_A = 0° to +70°C, Case 626, 751

A low power audio amplifier circuit intended (primarily) for telephone applications, such as speakerphones. Provides differential speaker outputs to maximize output swing at low supply voltages (2 volt min.). Coupling capacitors to the speaker, and snubbers, are not required. Overall gain is externally adjustable from 0 to 46 dB. A Chip Disable pin permits powering-down to mute the audio signal and reduce power consumption.

- Drives a Wide Range of Speaker Loads (16 to 100 Ω)
- Output Power Exceeds 250 mW with 32 Ω Speaker
- Low Distortion (THD = 0.4% Typical)
- Wide Operating Supply Voltage (2 to 16 V) — Allows Telephone Line Powered Applications.
- Low Quiescent Supply Current (2.5 mA Typical)
- Low Power-Down Quiescent Current (60 µA Typical)

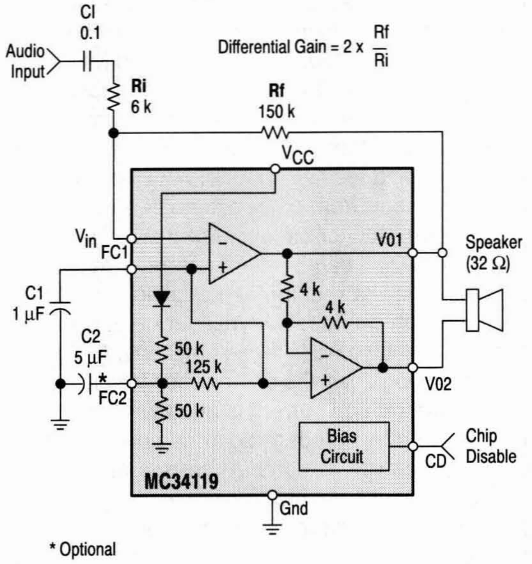

Current Mode Switching Regulator

MC34129 T_A = 0° to +70°C, Case 646, 751A

High performance current mode switching regulator for low-power digital telephones. Unique internal fault timer provides automatic restart for overload recovery. A start/run comparator is included to implement bootstrapped operation of V_{CC}.

Although primarily intended for digital telephone systems, these devices can be used cost effectively in many other applications. On-chip functions and features include:

- Current Mode Operation to 300 kHz
- Automatic Feed Forward Compensation
- Latching PWM for Cycle-By-Cycle Current Limiting
- Latched-Off or Continuous Retry after Fault Timeout
- Soft-Start with Maximum Peak Switch Current Clamp
- Internally Trimmed 2% Bandgap Reference
- Input Undervoltage Lockout

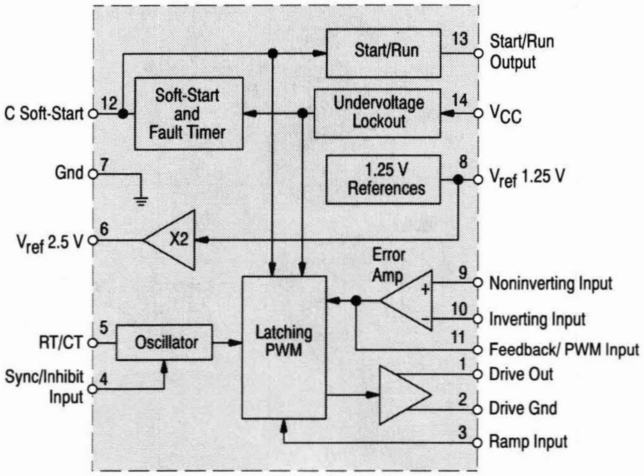

300 Baud FSK Modems

MC145442 Modem — CCITT V.21 Case 738, 751D
MC145443 Modem — Bell 103 Case 738, 751D

This powerful modem combines a complete FSK modulator/demodulator and an accompanying transmit/receive filter system on a single silicon chip. Designed for bidirectional transmission over the telephone network, the modem operates at 300 baud and can be obtained for compatibility with CCITT V.21 and Bell 103 specifications.

The modem contains an on-board carrier-detect circuit that allows direct operation on a telephone line (through a simple transformer), providing simplex, half-duplex, and full-duplex data communications. A built-in power amplifier is capable of driving –9.0 dBm onto a 600 Ω line in the transmit mode.

CMOS processing keeps power dissipation to a very low 45 mW, with a power-down dissipation of only 1.0 mW . . . from a single 5.0 V power supply. Available in a 20-pin dual-in-line P suffix, and a wide body surface mount DW suffix.

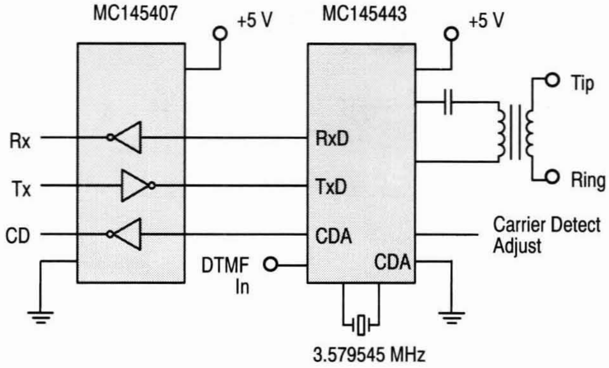

MC145444 — CCITT V.21 Case TBD

This device includes the DTMF generator and call progress tone detector (CPTD) as well as the other circuitry needed for full-duplex, half-duplex, or simplex 300 baud data communication over a pair of telephone lines. It is intended for use with telemeter system or remote control system applications.

The differential line driver is capable of driving 0 dBm into a 600 Ω load. The transmit attenuator is programmable in 1 dB steps.

ADPCM Transcoder

MC145532 Case 620, 751G

The MC145532 Adaptive Differential Pulse Code Modulation (ADPCM) Transcoder provides a low-cost, full-duplex, single-channel transcoder to (from) a 64 kbps PCM channel from (to) either a 16 kbps, 24 kbps, 32 kbps, or 64 kbps channel.

- Complies with CCITT Recommendation G.721 (Geneva 1986)
- Complies with the American National Standard (T1.301-1987)
- Full-duplex, single-channel operation
- μ-Law or A-Law Coding is pin selectable
- Synchronous or asynchronous operation
- Easily interfaces with any member of Motorola's PCM codec/filter Mono-Circuit family or other industry standard codec
- Serial PCM and ADPCM Data Transfer Rate from 64 kbps to 5.12 Mbps
- Power down capability for low cost consumption
- The Reset state, an option specified in the Standards, is automatically initiated when the Reset pin is released.
- Simple time slot assignment timing for Transcoder Applications
- Single 5.0 V power supply
- Evaluation Kit MC145536EVK supports the MC145532 as well as the MC145480 PCM Codec-Filter. (See PBX Architecture.)

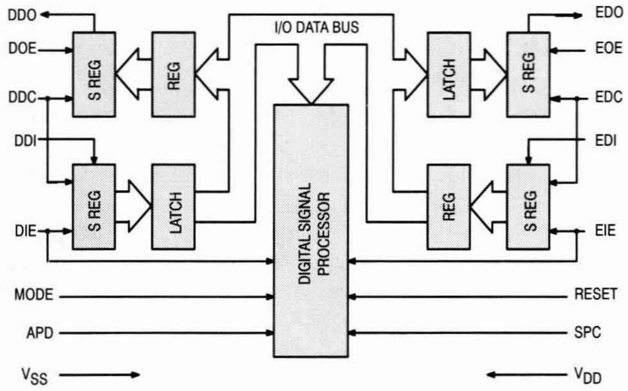

Bit Rate Generators

MC14411 Case 709, 623

Internal (crystal controlled) 1.843 MHz oscillator and subsequent divider networks provide 16 different output clocks rates ranging from 75 Hz to 1.843 MHz for data communications equipment such as teleprinters, printers, CRT terminals and microprocessor systems.

MC145411 Case 648

Similar to the MC14411, this device utilizes a 1.843 MHz or 3.6864 MHz crystal frequency input divided to provide nine different output clock rates from 150 Hz to 1.843 MHz, or 300 Hz to 3.6864 MHz, respectively.

Calling Line Identification (CLID) Receiver with Ring Detector

MC145447 Case 648, 751G

The MC145447 is designed to demodulate Bell 202 1200 baud FSK asynchronous data. Its primary application is in products that will be used to receive and display the calling number, or the message waiting indicator sent to subscribers from participating central office facilities of the public switched network. The device also contains a carrier detect circuit and ring detector which may be used to power up the device.

Applications include adjunct boxes, answering machines, feature phones, fax machines, and computer interface products.

The MC145447 offers the following performance features:

- Ring Detector On Chip
- Ring Detect Output for MCU Interrupt
- Power Down Mode, Less Than 1 μA
- Single Supply: +3.5 V to +6.0 V
- Pin Selectable Clock Frequencies: 3.68 MHz, 3.58 MHz, or 455 kHz
- Two Stage Power Up for Power Management Control

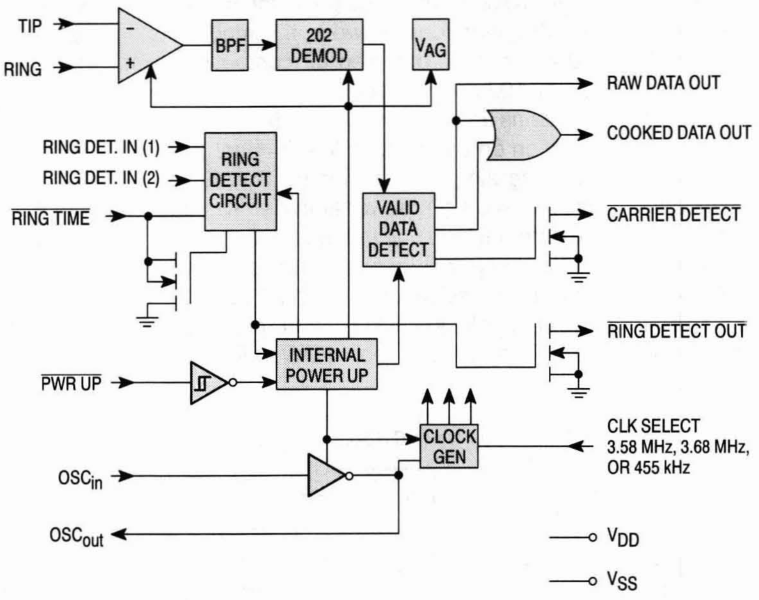

Calling Line I. D. Receiver Evaluation Kit

MC145460EVK

The MC145460EVK is a low-cost evaluation platform for the MC145447 above. The MC145460EVK facilitates development and testing of products that support the Bellcore customer premises equipment (CPE) data interface, which enables services such as Calling Number Delivery (CND). The MC145447 can be easily incorporated into any telephone, FAX, PBX, key system, answering machine, CND adjunct box or other telephone equipment with the help of the MC145460EVK development kit.

- Easy clip on access to key MC145447 signals
- Generaous prototype area
- Configurable for MC145447 automatic or external power up control
- EIA-232 and logic level ports for connection to any PC or MCU development platform
- Carrier Detect, Ring Detect and Data Status LEDs
- Optional tip and ring input protection network
- Documentation: MC145460EVK User Guide, MC145447 Data Sheet
- Additional MC145447 samples

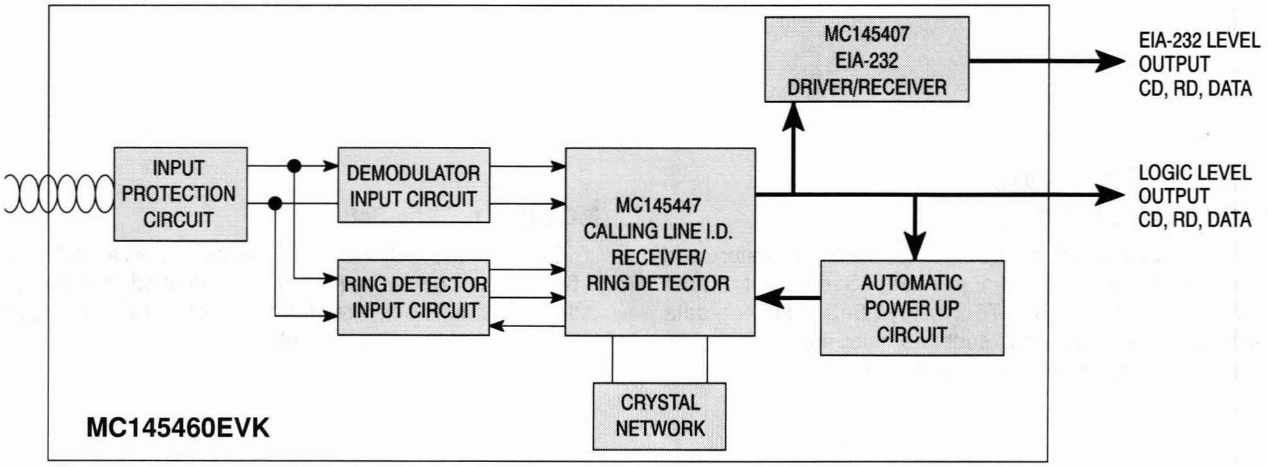

Continuously Variable Slope Delta (CVSD) Modulator/Demodulator

MC34115 T_A = 0° to +70°C, Case 648
MC3417/18 T_A = 0° to +70°C, Case 620
MC3517/18 T_A = –55° to +125°C, Case 620

Provides the A/D-D/A function of voice communications by digital transmission.

The MC3517/18 series of CVSDs is designed for military secure communications and commercial telephone applications. A single IC provides both encoding and decoding functions in a 16-pin package.

- Encode and decode functions on the same chip with a digital input for selection
- CMOS compatible digital output
- Digital input threshold selectable (V_{CC}/2 reference provided on chip)
- MC3417/MC3517/MC34115 have a 3-bit algorithm (general communications)
- MC3418/MC3518 have a 4-bit algorithm (commercial telephone)

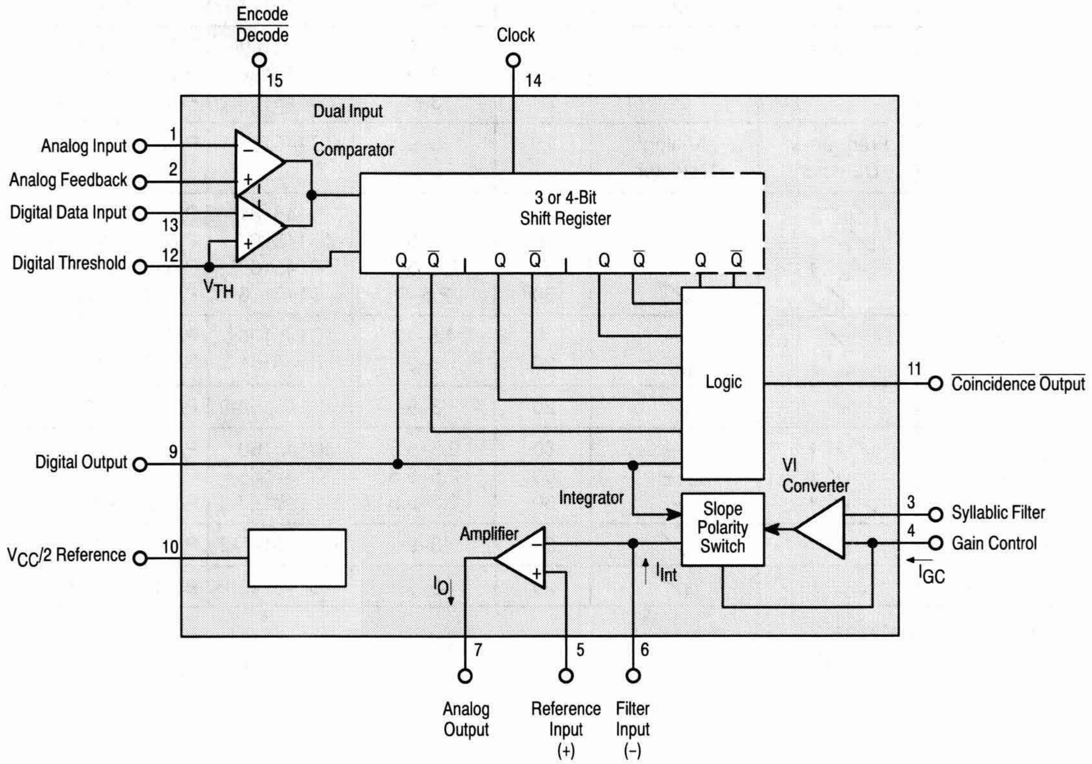

Phase-Locked Loop Components

Motorola offers a choice of phase-locked loop components ranging from complete functional frequency synthesizers for dedicated applications to a wide selection of general purpose PLL circuit elements. Technologies include CMOS for lowest power consumption and bipolar for high speed operation. Typical applications include TV, CATV, radio, scanners, cordless telephones plus home and personal computers.

PLL Frequency Synthesizers

Divider Programming Format	External Prescaler Modulus	Single-Ended (3-State) Phase Detector Output	Double-Ended Phase Detector Output	f_{max} (MHz)	Functional Supply Range (V)	Device Number	Suffix/ Package
Serial	Single	✓	✓	20	3–9	MC145155-2	P/707, DW/751D, FN/775
		✓	✓	20	3–9	MC145157-2	P/648, DW/751G, FN/775
	Dual	✓✓ ♦	—	15	3–9	MC145149	P/738, DW/751D
		✓	✓	20	3–9	MC145156-2	P/738, DW/751D, FN/775
		✓	✓	20	3–9	MC145158-2	P/648, DW/751G, FN/775
	Dual	Frequency Detector	Analog Detector	15	3–9	MC145159-1	P/738, DW/751D, FN/775
		✓✓	—	60	2.5–5.5	MC145161	P/648, DW/751G
		✓✓ ♦	—	60	2.5–5.5	MC145167	P/648, DW/751G
		✓✓ ♦	—	60	2.5–5.5	MC145169	P/648, DW/751G
		✓	✓	160#	2.5–6	MC145170	P/648, D/751B
Parallel	Single	✓	—	4	4.5–12	MC145106	P/707, DW/751D, FN/775
		✓	✓	20	3–9	MC145151-2	P/710, FN/776
	Dual	—	✓	20	3–9	MC145152-2	P/710, FN/776
	Not Required	✓✓ ♦	—	60	2.5–5.5	MC145160	P/707, DW/751D
		✓✓ ♦	—	60	2.5–5.5	MC145166	P/648, DW/751G
		✓✓ ♦	—	60	2.5–5.5	MC145168	P/648, DW/751G
4-Bit Bus	Single	✓	✓	20	3–9	MC145145-2	P/707, DW/751D
	Dual	✓	✓	20	3–9	MC145146-2	P/738, DW/751D

♦ Accommodates two loops per package.
#180 MHz version available, see data sheet.

Intended Applications

General Purpose	Cordless Phones
MC145106	MC145160
MC145145-2	MC145166
MC145146-2	MC145167
MC145149	MC145168
MC145151-2	MC145169
MC145152-2	
MC145155-2	
MC145156-2	
MC145157-2	
MC145158-2	
MC145159-1	
MC145170	

Additional Phase-Locked Loop Functions

Function	Family	Devices 0 to 70°C	Suffix/Case
Oscillators			
Crystal Oscillator	MECL	MC12061	P/648, L/620
Voltage-Controller Oscillator	MECL	MC1648#	P/646, L/632, F/607
Voltage-Controlled Multivibrator	MECL	MC1658#	P/648, L/620
Dual Voltage-Controlled Multivibrator	TTL	MC4024/ MC4324*	P/648, L/632, F/607
Voltage-Controller Oscillators	TTL/LS	SN74LS724	P.626, L/693
Phase Detectors			
Digital Mixer	MECL	MC12000	P/646, L/632
Phase-Frequency Detector	MECL	MC12040	
Phase-Frequency Detector	TTL	MC4044 MC4344*	P/646, L/632, F/607
Analog Mixer, Double Balanced	MECL	MC12002#	P/646, L/632
Modulator/Demodulator	Linear	MC1496**/ MC1596*	P/646, L/632
Control Functions			
Counter-Control Logic	MECL	MC12014	P/648, L/620
Prescalers/Counters			
UHF — 2,500 MHz	MECL	MC1690#	F/650, L/620
Two-Modulus ÷ 5/ ÷ 6, 600 MHz	MECL	MC12009#	P/648, L/620
Two-Modulus ÷ 8/ ÷ 9, 600 MHz	MECL	MC12011#	
Two-Modulus ÷ 10/ ÷ 11, 600 MHz	MECL	MC12013#	
Low Power Two-Modulus ÷ 32/ ÷ 33, 225 MHz	MECL	MC12015##	P/626, D/751
Low Power Two-Modulus ÷ 40/ ÷ 41, 225 MHz	MECL	MC12016##	
Low Power Two-Modulus ÷ 64/ ÷ 65, 225 MHz	MECL	MC12017##	
Low Power Two-Modulus ÷ 128/ ÷ 129, 520 MHz	MECL	MC12018##	
Low Power Two-Modulus ÷ 20/ ÷ 21, 225 MHz	MECL	MC12019##	
Low Power Two-Modulus ÷ 64/ ÷ 65, ÷ 128/ ÷ 129 Pos. Edge 1.1 GHz	MECL	MC12022A##	
Low Power Two-Modulus ÷ 64/ ÷ 65, ÷ 128/ ÷ 129 Neg. Edge 1.1 GHz	MECL	MC12022B##	
Low Power ÷ 64 Prescaler, 225 MHz 3.2 to 5.5 V_{CC}	MECL	MC12023	
Low Power ÷ 64 Prescaler, 1.1 GHz	MECL	MC12073	
Low Power ÷ 256 Prescaler, 1.1 GHz	MECL	MC12074	
UHF ÷ 2 Prescaler, 750 MHz	MECL	MC12090	P/648, L/620, F/650
Programmable ÷ N Decade	TTL	MC4316/ MC4316*	P/648, L/620, F/650

*T_A = –55° to +125°C #T_A = –30° to +85°C
**T_A = 0° to 70°C ##T_A = –40° to +85°C
Plastic packages available for commercial temperature range only.

Communications Circuits Package Overview

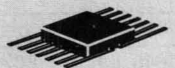

CASE 607
CERAMIC
F SUFFIX

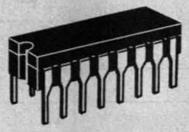

CASE 620
CERAMIC
L SUFFIX

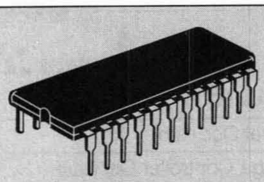

CASE 623
CERAMIC
L SUFFIX

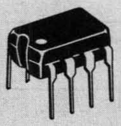

CASE 626
PLASTIC
P SUFFIX

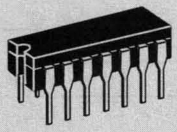

CASE 632
CERAMIC
L SUFFIX

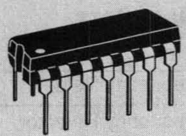

CASE 646
PLASTIC
P SUFFIX

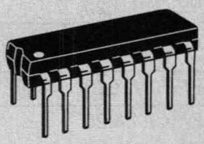

CASE 648
PLASTIC
P SUFFIX

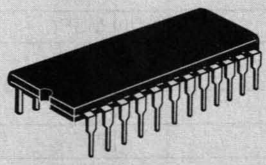

CASE 649
PLASTIC
P SUFFIX

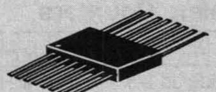

CASE 650
CERAMIC
F SUFFIX

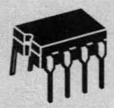

CASE 693
CERAMIC
L SUFFIX

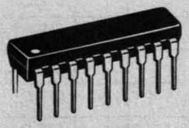

CASE 707
PLASTIC
P SUFFIX

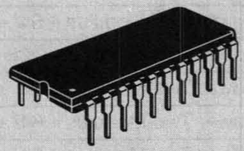

CASE 708
PLASTIC
P SUFFIX

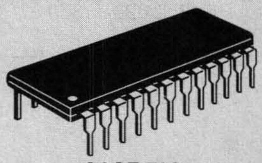

CASE 709
PLASTIC
P SUFFIX

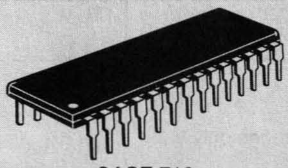

CASE 710
PLASTIC
P SUFFIX

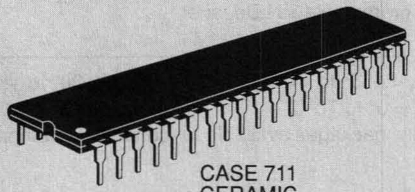

CASE 711
CERAMIC
P SUFFIX

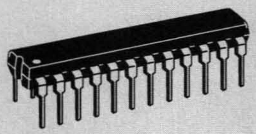

CASE 724
PLASTIC
N SUFFIX

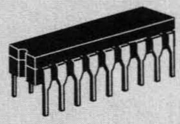

CASE 726
CERAMIC
L SUFFIX

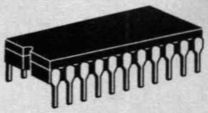

CASE 736, 736A
CERAMIC
L SUFFIX

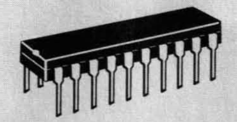

CASE 738
PLASTIC
P SUFFIX

CASE 751
PLASTIC
S0-8, SOP-8
D SUFFIX

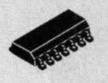

CASE 751A
PLASTIC
SO-14
D SUFFIX

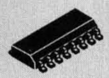

CASE 751B
PLASTIC
SO-16
D SUFFIX

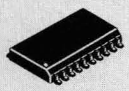

CASE 751D
PLASTIC
SO-20L
DW SUFFIX

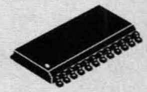

CASE 751E
PLASTIC
SO-24L
DW SUFFIX

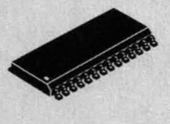

CASE 751F
PLASTIC
SO-28L
DW SUFFIX

CASE 751G
PLASTIC
SO-16L
DW SUFFIX

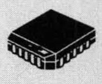

CASE 775
PLASTIC
PLCC–20
FN SUFFIX

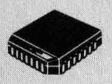

CASE 776
PLASTIC
PLCC-28
FN SUFFIX

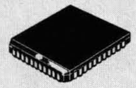

CASE 777
PLASTIC
PLCC-44
FN SUFFIX

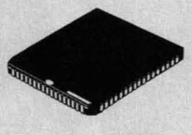

CASE 779
PLASTIC
PLCC-68
FN SUFFIX

Consumer Electronic Circuits

In Brief . . .

These integrated circuits reflect Motorola's continuing commitment to semiconductor products necessary for consumer system designs. This tabulation is arranged to simplify selection of consumer integrated circuit devices that satisfy the primary functions for home entertainment products, including Television, Hi-Fi Audio and AM/FM Radio.

Page

Entertainment Radio Receiver Circuits 4.8-2
Video Circuits 4.8-3
Remote Control Circuits 4.8-6
Package Overview 4.8-7

Consumer Electronic Circuits

Entertainment Radio Receiver Circuits
C-QUAM® AM Stereo Decoders 4.8-2
Audio Amplifiers 4.8-2
Audio Attenuator 4.8-2
Video Circuits
Modulators 4.8-3
Demodulators 4.8-3
Filters 4.8-3
Tuning System 4.8-3
Deflection 4.8-3
Sound 4.8-3
Transistor Arrays 4.8-3
Television Subsystems 4.8-4
Video Amplifiers 4.8-4
Video A-D Converters 4.8-4
Color Graphics DACs 4.8-4
Monitor Systems 4.8-4
Remote Control Circuits 4.8-6
CMOS Remote Control Functions 4.8-6
Package Overview 4.8-7

Entertainment Radio Receiver Circuits

C-QUAM® AM Stereo Decoders

Function	Features	Suffix/ Case	Device
Basic AM Stereo Decoder	Monaural/Stereo AM Detector/Indicator, 6 to 10 V Operation	P/738	MC13020
Advanced AM Stereo Decoder	Medium Voltage 2 to 8 V, Decoder and IF Amp	DW/751F	MC13022
AM Front End	Tuning Stabilizer for MC13022	P/738	MC13023
AM Stereo Personal Radio	Complete Low Voltage AM Stereo Receiver	P/724	MC13024

Audio Amplifiers

Function	P_O (Watts)	V_{CC} Vdc Max	V_{in} @ rated P_O mV Typ	I_D mA Typ	R_L (Ohms)	Suffix/ Case	Device
Mini Watt SOIC Audio Amp	1.0 W	35	80	11	16	D/751	MC13060
Low Power Audio Amp	400 mW	16	—	2.5 mA	8–100	D/751 P/626	MC34119

Audio Attenuator

Function	V_{CC} Range (Vdc)	THD (%)	Tone Control Range dB Typ	Attenuation Range dB Typ	Suffix/ Case	Device
Electronic Attenuator	8–18	0.6 Typ	± 13	80	P/626	MC3340

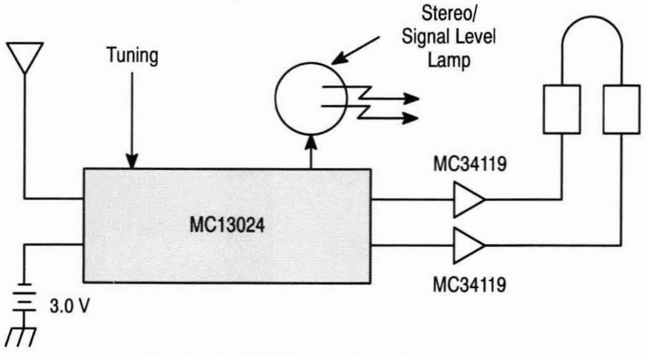

C-QUAM® Portable Receiver

When AM stereo broadcasting was sanctioned by the F.C.C. in 1982, there were five different systems vying for user approval. Since then C-QUAM® has become the defacto standard in the U.S.A., with over 700 stations "on the air" as the market and broadcasters recognize its performance advantages. It is the legal standard in Canada, Australia and Brazil where A.M. is the dominant radio medium. C-QUAM is available from nearly 50 automobile radio makers and a dozen home receiver builders.

Based on the field proven C-Quam performance, Motorola has developed a low cost, high performance C-Quam AM Stereo Decoder chip, with fully compatible, no-compromise mono performance, as the basis for both broadcast and receiving equipment. Additional IC components from Motorola's inventory offer a single supply source for state-of-the-art radio receiver designs. New products cover virtually every type of receiver — home, auto, and personal portable.

Video Circuits

Modulators

Function	Features	Suffix/ Case	Device
Color TV Video Modulator	RF Oscillator and Modulator	P/626	MC1373
TV Modulator (High Quality)	RF Oscillator/Modulator, and FM Sound Oscillator/Modulator	P/646	MC1374
Video RGB to PAL/NTSC Encoder	RGB and Sync Inputs, Composite Video Out — PAL/NTSC Switch Selectable	P/738 DW/751D	MC1377
Video Overlay Synchronizer	Complete Color TV Video Overlay Synchronizer	P/711 FN/777	MC1378

Demodulators

Color Processor	PAL/NTSC Input, RGB Output, also RGB Inputs, Plus Fast Blanking Input. Ideal for Text, Graphics, Overlays	711	TDA3301B
Chroma 4 Multistandard Decoder	Full PAL/SECAM/NTSC Capability, Dual Composite or S-VHS Inputs, RGB Outputs, Digital Control of all On-Chip Functions	P/711	MC44000*
Digital Multistandard Video Processor	RGB Outputs Drive A/D Converters, Line Locked Clock Generator, accepts NTSC/PAL Composite Video, Digitally Controlled via I^2C Bus	FN/777	MC44010

Filter

Enhanced Comb Filter	Fast 8-bit A/D Converter, Two 8-bit D/A Converters, Two Line-Delay Memories, Utilizes NTSC Subcarrier Frequency Clock, CMOS Technology	FU/TBD**	MC141620

Tuning System

Remote Control Amplifier	Infrared Diode Signal Amplifier Shaper	P/626	MC3373
PLL-Tuning Circuit	TV Tuning System — Prescaler — M-Bus Control	P/707 DW/751C	MC44802A

Deflection

Horizontal Processor	Linear Balanced Phase Detector, Oscillator and Predriver, Adjustable DC Loop Gain, Adjustable Duty Cycle	P/626	MC1391
Waveform Generator for Projection TVs	Provides 18 Waveforms, 9 Positive and 9 Negative. Rear or Front Projection TVs, Multistandard Operation.	P/711	MC44615

Sound

Sound IF Detector	Interchangeable with ULN2111A	P/646	MC1357
Sound IF, Low Pass Filter, FM Detector, DC Volume Control, Preamplifier	Complete TV Sound System; 100 µV, 3 dB Limiting Sensitivity; 4 Watts Output; V_{CC} = 24 V, R_L = 16 Ω	P/648C	TDA3190

Transistor Arrays

Function	$I_{C(max)}$ mA	V_{CEO} (V) Max	V_{CBO} (V) Max	V_{EBO} (V) Max	Suffix/ Case	Device
One Differentially Connected Pair and Three Isolated Transistors	50	15	20	5.0	P/646 D/751A	MC3346
Dual Independent Differential Amplifiers with Associated Constant Current Transistors	50	15	20	5.0	P/646	CA3054
General Purpose H/V Array	50	30	40	5.0	D/751A	CA3146

*To Be Introduced
**To Be Determined

Video Circuits (continued)

Television Subsystems

Function	Features	Suffix/ Case	Device
MONOMAX – 1-Chip Black and White TV Subsystem	Video IF, Detector, AGC, Video Amplifier, Horizontal Processor, Vertical Processor, and Sync For 525 Line Systems	P/710	MC13001X
	Same as Above Except For 625 Line Systems		MC13002X
Sound IF, Low Pass Filter, Detector, dc Volume Control, Preamplifier, Power Amplifier	Complete TV Sound System; 100 μV, 3 dB Limiting Sensitivity; 4 Watts Output; V_{CC} = 24 V, R_L = 16 Ω	P/648C	TDA3190

Video Amplifiers

Function	Features	Suffix/ Case	Device
1st and 2nd Video IF Amplifier	IF Gain @ 45 MHz = 50 dB typ, AGC Range = 60 dB min	P/626 D/751	MC1350
3rd IF, Video Detector, Video Buffer, and AFC Buffer	Low Level Detection, Low Harmonic Generation	P/626	MC1330A
Advanced Video IF	Complete Video/Audio IF System for High Performance Analog TV Receivers	P/724 DW/751F	MC44301
Dual Video Amps	Gain @ 4.43 MHz = 6 dB ± 1 dB, Fixed Gain, Internally Compensated, CMOS Technology	P/626 F/TBD**	MC14576B
	Gain @ 5 MHz = 10 dB max, 10 MHz = 6 dB max, Adjustable Gain, Internally Compensated, CMOS Technology	P/626 F/TBD**	MC14577B

Video A-D Converters

Resolution (Bits)	Nonlinearity (Max)	Conversion Rate	Supplies (V)	Temperature Range	Comments	Suffix/ Case	Device
Triple 8-Bit	1 LSB	15 MHz	+5.0 ±10%	0° to +70°C	3 Separate Video Channels	FN/777	MC44250

Color Graphics DACs

Resolution (Bits)	Accuracy @ 25°C (Max)	Max Settling Time (± 1/2 LSB)	Supplies (V)	Temperature Range	Comments	Suffix/ Case	Device
4 x 3	± 1/4 LSB	3.0 ns	+5.0, or ±5.0	0° to +70°C	125 MHz Color Graphics Triple DAC	L/733	MC10320
					90 MHz Color		MC10320-1

Monitor Systems

Function	Features	Suffix/ Case	Device
Multisync TTL to Analog Interface	Converts TTL Inputs from CGA or EGA to Analog RGB Outputs	P/724 DW/751E	MC1382
Multimode Monitor RGB Video Amplifier and Timebase Processor	Automatically Tracks Horizontal Frequency of All Commonly used Standards. Horizontal Continuously Variable from 15 kHz to 56 kHz. Vertical Operates from 45 to 100 Hz.	B/859	MC1381
Multimode Monitor Processor	Auto Frequency Tracking, Vertical Output Pulse and 50 MHz Video System	P/711	MC1383
Multimode Monitor Processor with Vertical Timebase	Auto Frequency Tracking, Vertical Time Base and 50 MHz Video System	P/711	MC1384
Geometry Correction Waveform Generator	Provides Geometry Correction by Generating Complex Waveforms that Modulate the Horizontal and Vertical Scan Currents. Supports Multifrequency Operation.	P/711	MC1388

*To Be Introduced
**To Be Determined

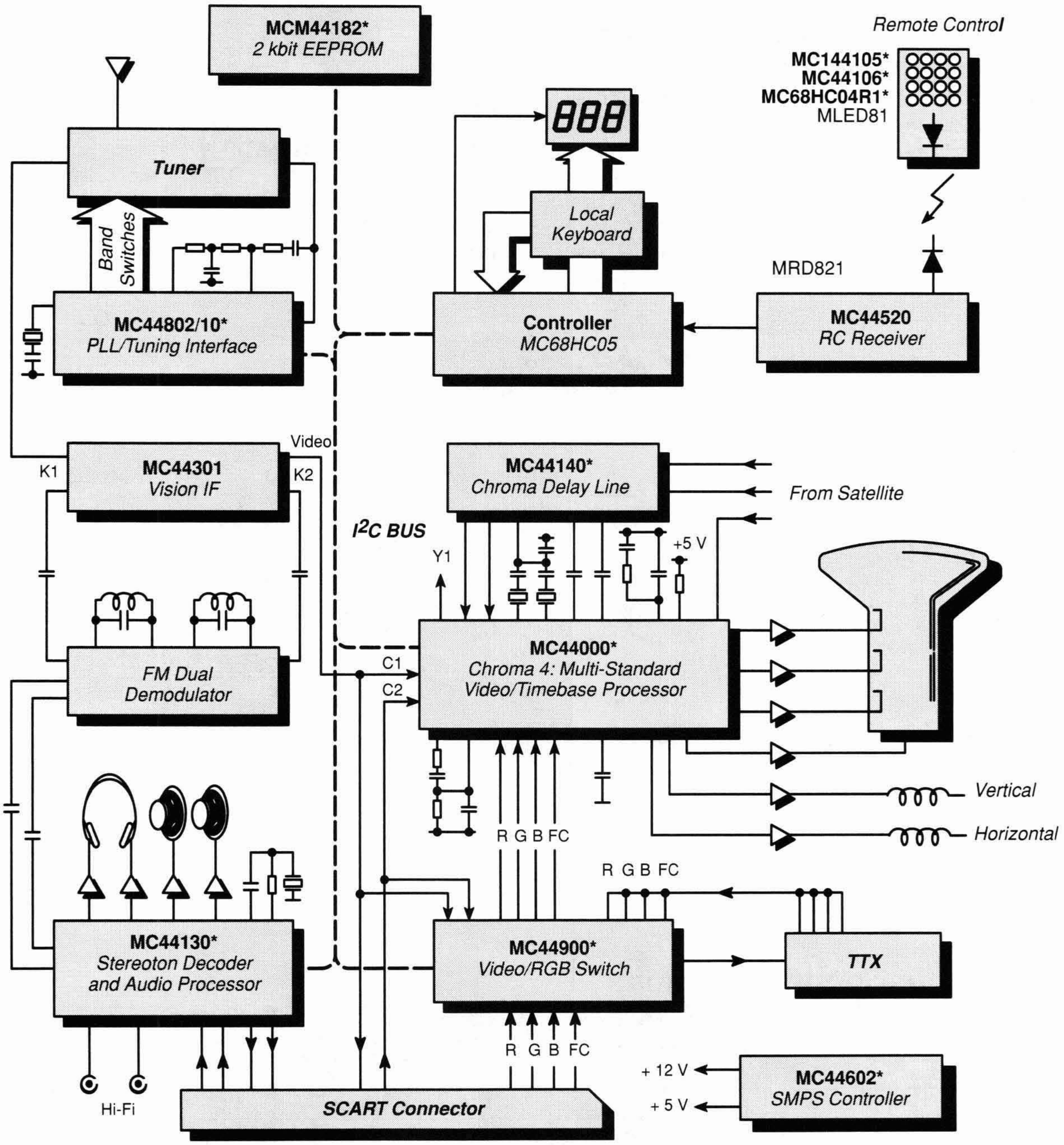

*To Be Introduced

M44000 Family Block Diagram

Remote Control Circuits

MC3373P Amplifier/Detector (Bipolar), Case 626
MC14497 Transmitter (CMOS), Case 707

The MC3373 remote control receiver is specifically designed for infrared link systems where high sensitivity and good noise immunity are critical. The MC3373 incorporates a high gain detector diode preamp driving an envelope detector and data wave shaper for accurate data recovery. Provision is also made to use an external L-C tank circuit at the carrier frequency, normally 30 to 60 kHz, for extended range low noise systems. Applications include TV remote control, short range data links (up to several hundred feet), door openers and security systems. The MC14497 is an ideal companion transmitter, where a simple D.T.M.F. like key-pad control is desired. The Motorola Discrete Opto Division also has several high sensitivity detectors and emitters which match up well to the MC3373 system.

Remote Control Application
40 kHz Carrier

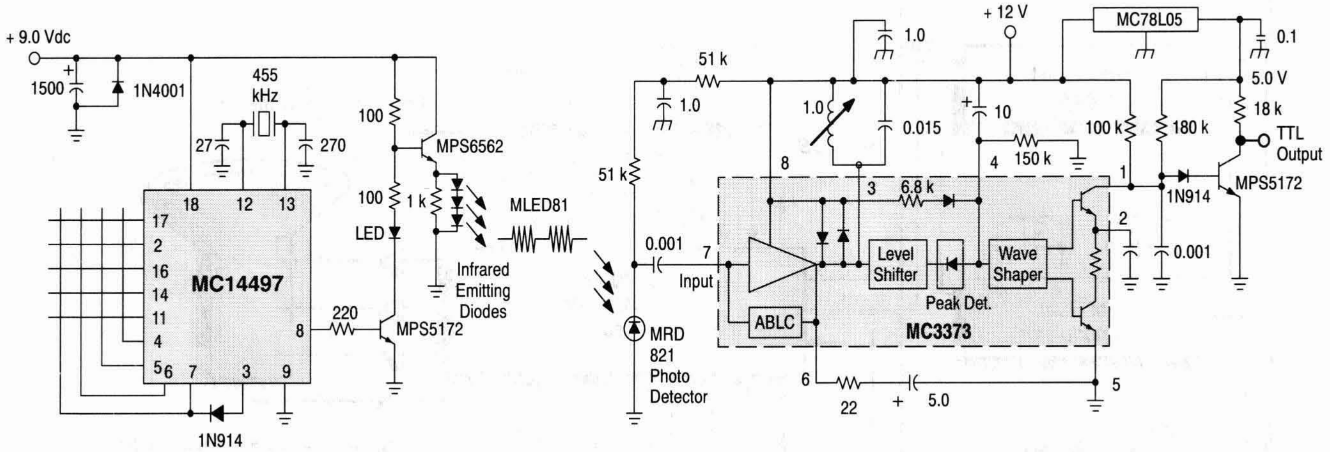

CMOS Remote Control Functions

Function	Number of Address Lines	Maximum Number of Address Codes	Number of Data Bits	Operation	Device	Suffix/ Case
Addressable UART	7	128	7/8	Full Duplex	**MC14469**	P/711, FN/777
Transmitter	0	0	6	Simplex	**MC14497**	P/707
Encoder	Depends on Decoder*	Depends on Decoder*	Depends on Decoder*	Simplex	**MC145026**	P/648, D/751B
Decoder	5	243	4	Simplex	**MC145027**	P/648, D/751G
	9	19,683	0	Simplex	**MC145028**	
Encoder/Decoder	9	512	0	Half Duplex	**MC145030**	P/738, DW/751D
	15	32,768	0	Half Duplex	**MC145033**	DW/751F
Encoder	13 or 17	131,072	4	Simplex	**MC145034**	
Decoder	13 or 17	131,072	4	Simplex	**MC145035**	

*See MC145027, MC145028

Consumer Electronic Circuits Package Overview

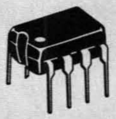

CASE 626
PLASTIC
P SUFFIX

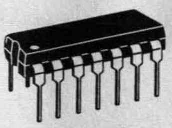

CASE 646
PLASTIC
P SUFFIX

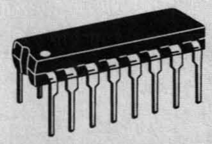

CASE 648, 648C
PLASTIC
P SUFFIX

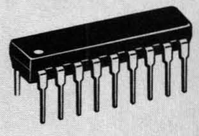

CASE 707
PLASTIC
P SUFFIX

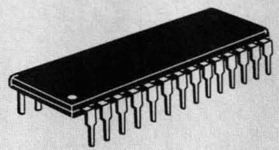

CASE 710
PLASTIC
P SUFFIX

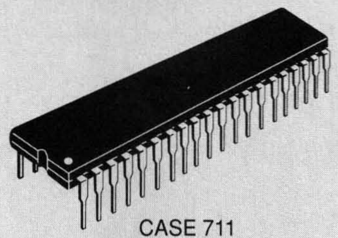

CASE 711
PLASTIC
P SUFFIX

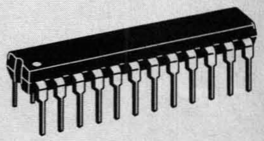

CASE 724
PLASTIC
P SUFFIX

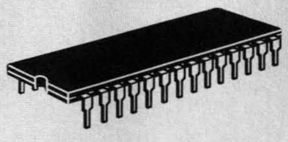

CASE 733
CERAMIC
L SUFFIX

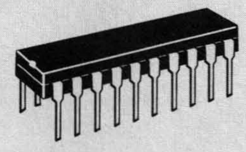

CASE 738
PLASTIC
P SUFFIX

CASE 751
PLASTIC
D SUFFIX

CASE 751A
PLASTIC
D SUFFIX

CASE 751B
PLASTIC
D SUFFIX

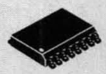

CASE 751C
PLASTIC
DW SUFFIX

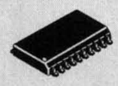

CASE 751D
PLASTIC
DW SUFFIX

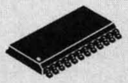

CASE 751E
PLASTIC
DW SUFFIX

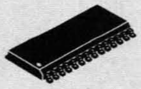

CASE 751F
PLASTIC
DW SUFFIX

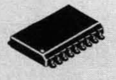

CASE 751G
PLASTIC
DW SUFFIX

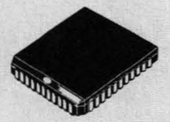

CASE 777
PLASTIC
FN SUFFIX

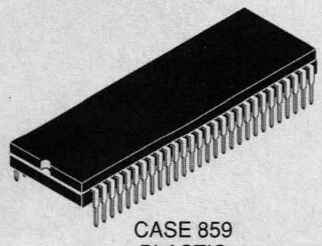

CASE 859
PLASTIC
B SUFFIX

Automotive Electronic Circuits

In Brief . . .

Motorola Linear has established itself as the leader in custom bipolar integrated circuits in the American and European automotive markets. These products are key elements in the rapidly growing engine control and body electronics portions of modern automobiles. Today, based on this new technology, Motorola offers a wide array of standard products to serve the broad base of manufacturers who support this industry. These products range from rugged high current "smart" fuel injector drivers which control and protect the fuel management system, through the rigors of the underhood environment, to the latest in BiMOS switches. Several devices are targeted to support microprocessor housekeeping and data line protection. A wide range of packaging is available, from die and SOICs for high density layouts, to low thermal resistance multi-pin, single-in-line types for high power control ICs.

Page

Voltage Regulators 4.9-2
Electronic Ignition 4.9-2
Special Functions 4.9-2

Automotive Electronic Circuits

Voltage Regulators 4.9-2
Electronic Ignition 4.9-2
Special Functions 4.9-2
Automotive High-Side Driver Switch 4.9-3
Universal Microprocessor Power Supply 4.9-3

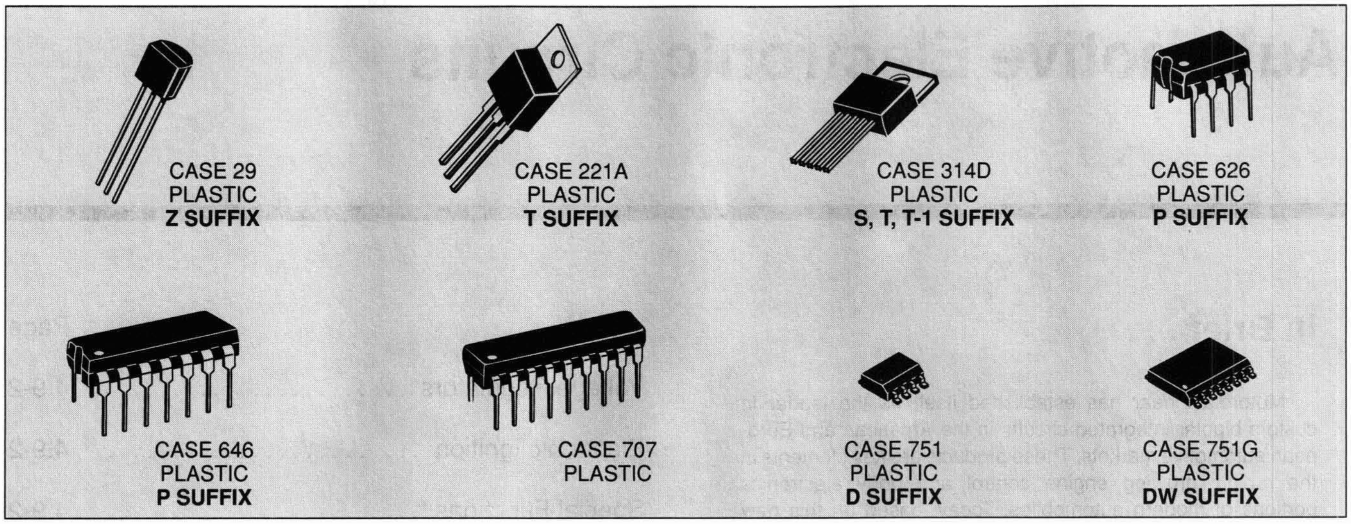

Voltage Regulators

Function	Features	Suffix/ Case	Device
Low Dropout Voltage Regulator	Positive fixed and adjustable output voltage regulators which maintain regulation with very low input to output voltage differential.	Z/29, T/221A, T/314D	LM2931,C
Low Dropout Dual Regulator	Positive low voltage differential regulator which features dual 5 V outputs, with currents in excess of 750 mA and 10 mA standby, and a low quiescent current of 3 mA or less.	T/314D	LM2935

Electronic Ignition

Function	Features	Suffix/ Case	Device
Electronic Ignition Circuit	Designed for Use in High Energy Variable Dwell Electronic Ignition Systems with Variable Reluctance Sensors. Dwell and Spark Energy are Externally Adjustable	P/626, D/751	MC3334
Flip-Chip Electronic Ignition Circuit	Same as MC3334 — Mirror Image Die for Inverted "Bumped" Mounting to Substrate	—	MCCF3334

Special Functions

Function	Features	Suffix/ Case	Device
Injector Drivers	Power Driver for Automotive Fuel Injection Systems, Reduced Hold Current MC3484S2-2 — 2 Amps, MC3484S4-2 — 4 Amps	S/314D	MC3484
Quad Low Side Injector Driver	Four independent outputs with 0.5 Ω $r_{DS(on)}$. Diagnostic features include overvoltage, open load, and short circuit detect. There is also reverse battery protection and over temperature detection.	TBD*	MC33294
Low Side Protected Switch	Drives inductive loads without external clamp circuitry. Over current, over voltage, and thermal protection. Fault output on DW and T-1 suffix devices.	DW/751G T/221A T-1/314D	MC3391
High Side Driver Switch	Drives loads from positive side of power supply and protects against high-voltage transients.	T/314D	MC3399
High Side TMOS Driver	Drives N-Channel MOSFETs with on-chip charge pump. Protects MOSFET from current overload and reports fault condition.	P/626 D/751	MC33091

*To Be Determined

Automotive High-Side Driver Switch

MC3399T T_J = –40° to +150°C, Case 314D

The MC3399T is a High-Side Driver Switch that is designed to drive loads from the positive side of the power supply. The output is controlled by a TTL compatible Enable pin. In the ON state, the device exhibits very low saturation voltages for load currents in excess of 750 mA. The device also protects the load from positive or negative going high voltage transients by becoming an open circuit and isolating the transient for its duration from the load.

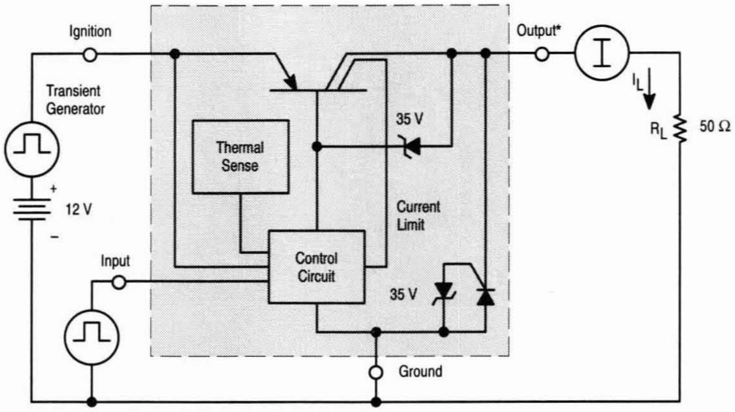

NOTE:
*Depending on Load Current and Transient Duration, an Output Capacitor (C_O) of sufficient value may be used to hold up Output Voltage during the Transient, and absorb Turn-off Delay Voltage Overshoot.

Universal Microprocessor Power Supply Controller

TCA5600 T_A = 0° to +125°C, Case 707
TCF5600 T_A = –40° to +75°C, Case 707

These devices are versatile power supply control circuits for microprocessor based systems and mainly intended for automotive applications and battery powered instruments. To cover a wide range of applications, they offer high circuit flexibility with a minimum of external components.

Functions included in these ICs are a temperature compensated voltage reference, on-chip DC/DC converter, programmable and remote controlled voltage regulator, fixed 5.0 V supply voltage regulator with external PNP power device, undervoltage detection circuit, power-on RESET delay and watchdog feature for orderly microprocessor operations.

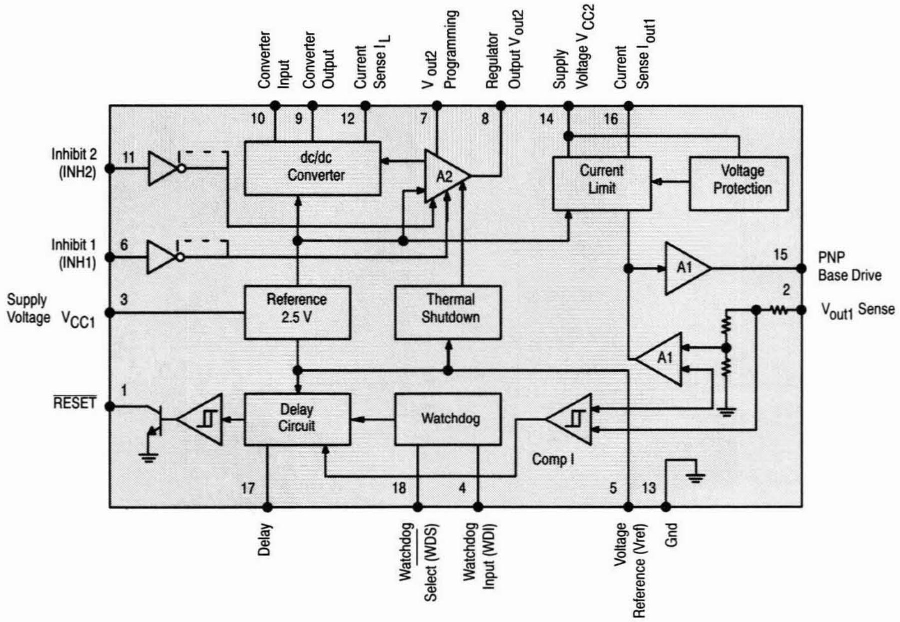

Other Linear Circuits

In Brief . . .

A variety of other analog circuits are provided for special applications with both bipolar and CMOS technologies. These circuits range from the industry standard analog timing circuits and multipliers to specialized CMOS smoke detectors and encoder/decoder functions. Other circuits include a transmitter receiver pair and a single chip receiver/transmitter. These products provide key functions in a wide range of applications, including data transmission, commercial smoke detectors, and various industrial controls.

	Page
Timing Circuits	4.10-2
Multiplers	4.10-2
Remote Control Circuits	4.10-3
Smoke Detectors (CMOS)	4.10-4
Package Overview	4.10-5

Other Linear Circuits

Timing Circuits
- Singles 4.10-2
- Dual 4.10-2

Multipliers
- Linear Four-Quadrant 4.10-2

Remote Control Circuits
- Amplifier/Detector (Bipolar) 4.10-3
- Transmitter (CMOS) 4.10-3

CMOS Remote Control Functions 4.10-3
Smoke Detectors (CMOS) 4.10-4
Package Overview 4.10-5

Timing Circuits

These highly stable timers are capable of producing accurate time delays or oscillation. In the time delay mode of operation, the time is precisely controlled by one external resistor and capacitor. For a stable operation as an oscillator, the free running frequency and the duty cycle are both accurately controlled with two external resistors and one capacitor. The output structure can source or sink up to 200 mA or drive TTL circuits. Timing intervals from microseconds through hours can be obtained.

Singles

MC1455P1,U T_A = 0° to +70°C, Case 626, 693
MC1455BP1 T_A = –40° to +85°C, Case 626

Dual

MC3456L,P T_A = 0° to +70°C, Case 632, 646
NE556A,N T_A = 0° to +70°C, Case 646
NE556D T_A = 0° to +70°C, Case 751

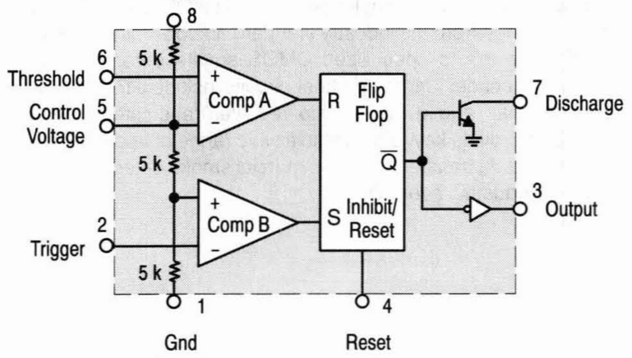

Multipliers

Linear Four-Quadrant Multipliers

Multipliers are designed for use where the output voltage is a linear product of two input voltages. Typical applications include: multiply, divide, square, root-mean-square, phase detector, frequency doubler, balanced modulator/demodulator, electronic gain control.

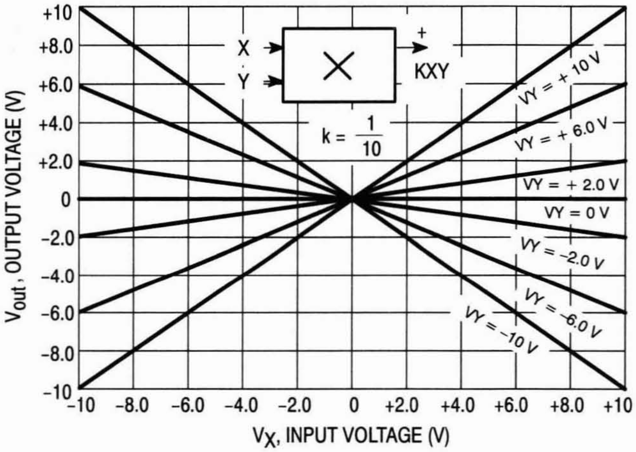

MC1594L T_A = –55° to +125°C, Case 620
MC1494L T_A = 0° to +70°C, Case 620

The MC1594/MC1494 is a Variable Transconductance Multiplier with internal level-shift circuitry and voltage regulator. Scale factor, input offsets and output offset are completely adjustable with the use of four external potentiometers. Two complementary regulated voltages are provided to simplify offset adjustment and improve power-supply rejection.

MC1595L T_A = –55° to +125° C, Case 632
MC1495L T_A = 0° to +70° C, Case 632

These devices are designed for uses where the output is a linear product of two input voltages. Maximum versatility is assured by allowing the user to select the level shift method. Typical applications include: multiply, divide*, square root*, mean square*, phase detector, frequency doubler, balanced modulator/demodulator, electronic gain control.

*When used with an operational amplifier.

Remote Control Circuits

MC3373P Amplifier/Detector (Bipolar), Case 626
MC14497 Transmitter (CMOS), Case 707

The MC3373 remote control receiver is specifically designed for infrared link systems where high sensitivity and good noise immunity are critical. The MC3373 incorporates a high gain detector diode preamp driving an envelope detector and data wave shaper for accurate data recovery. Provision is also made to use an external L-C tank circuit at the carrier frequency, normally 30 to 60 kHz, for extended range low noise systems. Applications include TV remote control, short range data links (up to several hundred feet), door openers and security systems. The MC14497 is an ideal companion transmitter, where a simple D.T.M.F. like key-pad control is desired. The Motorola Discrete Opto Division also has several high sensitivity detectors and emitters which match up well to the MC3373 system.

Remote Control Application
40 kHz Carrier

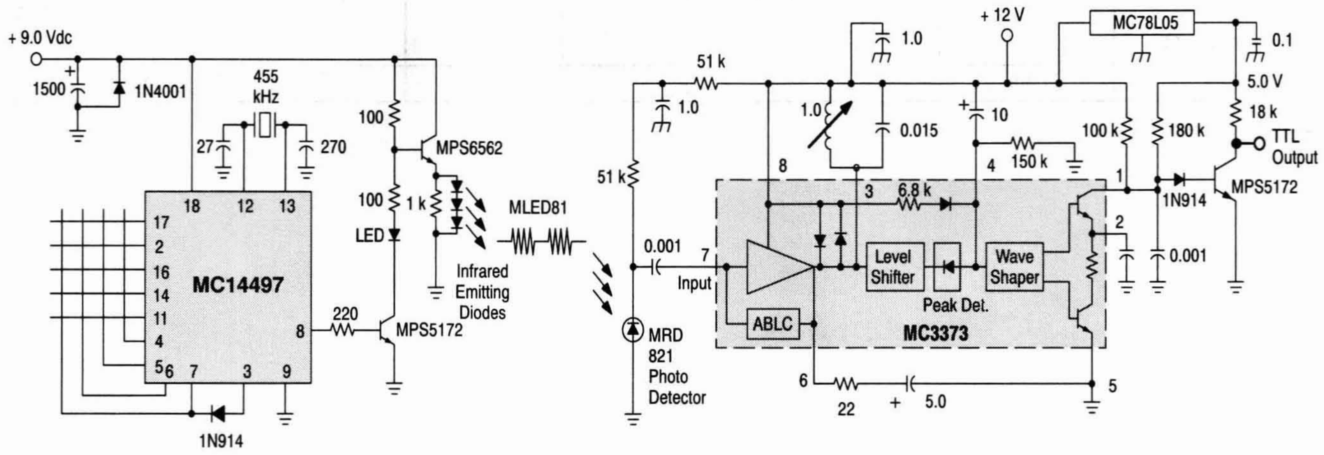

CMOS Remote Control Functions

Function	Number of Address Lines	Maximum Number of Address Codes	Number of Data Bits	Operation	Device	Suffix/ Case
Addressable UART	7	128	7/8	Full Duplex	**MC14469**	P/711, FN/777
Transmitter	0	0	6	Simplex	**MC14497**	P/707
Encoder	Depends on Decoder*	Depends on Decoder*	Depends on Decoder*	Simplex	**MC145026**	P/648, D/751B
Decoder	5	243	4	Simplex	**MC145027**	P/648, D/751G
	9	19,683	0	Simplex	**MC145028**	
Encoder/Decoder	9	512	0	Half Duplex	**MC145030**	P/738, DW/751D
	15	32,768	0	Half Duplex	**MC145033**	DW/751F
Encoder	13 or 17	131,072	4	Simplex	**MC145034**	
Decoder	13 or 17	131,072	4	Simplex	**MC145035**	

*See MC145027, MC145028

Smoke Detectors (CMOS)

These smoke detector ICs require a minimum number of external components. When smoke is sensed, or a low battery voltage is detected, an alarm is sounded via an external piezoelectric transducer. All devices are designed to comply with UL specifications.

Function	Recommended Power Source	Unique Feature	Low Battery Detector	Piezoelectric Horn Driver	Complies with UL217 and UL268	Device Number	Suffix/ Case
Ionization-Type Smoke Detector	Battery	High Input Impedance FET Comparator	✓	✓	✓	MC14467-1	P1/626
	Line		—	—	✓	MC14578	P/648
Ionization-Type Smoke Detector with Interconnect	Battery		✓	✓	✓	MC14468	
	Line		—	✓	✓	MC14470	
Photoelectric-Type Smoke Detector with Interconnect	Battery	Photo Amplifier	✓	✓	✓	MC145010	P/648 DW/751G
	Line		*	✓	✓	MC145011	

*Low-supply detector

Other Linear Circuits Package Overview

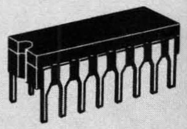

CASE 620
CERAMIC
L SUFFIX

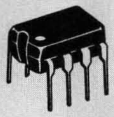

CASE 626
PLASTIC
P1 SUFFIX

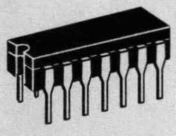

CASE 632
CERAMIC
L SUFFIX

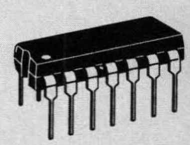

CASE 646
PLASTIC
P SUFFIX

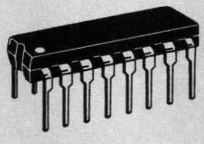

CASE 648
PLASTIC
P SUFFIX

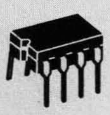

CASE 693
CERAMIC
U SUFFIX

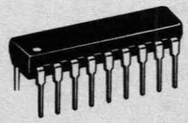

CASE 707
PLASTIC
P SUFFIX

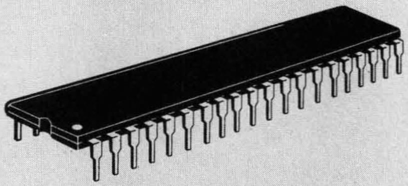

CASE 711
PLASTIC
P SUFFIX

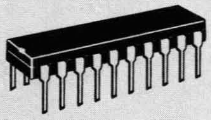

CASE 738
PLASTIC
P SUFFIX

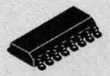

CASE 751B
PLASTIC
D SUFFIX

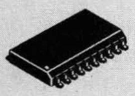

CASE 751D
PLASTIC
DW SUFFIX

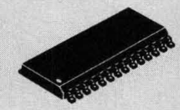

CASE 751F
PLASTIC
DW SUFFIX

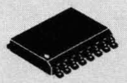

CASE 751G
PLASTIC
DW SUFFIX

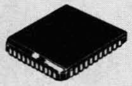

CASE 777
PLASTIC (PLCC)
FN SUFFIX

Surface Mount Technology

In Brief . . .

Surface Mount Technology is now being utilized to offer answers to many problems that have been created in the use of Insertion Technology.

Limitations have been reached with insertion packages and PC board technology. Surface Mount Technology offers the opportunity to continue to advance state-of-the-art designs that cannot be accomplished with Insertion Technology.

Surface Mount packages allow more optimum device performance with the smaller Surface Mount configuration. Internal lead lengths, parasitic capacitance and inductance that placed limitations on chip performance, has been reduced.

The lower profile of Surface Mount packages allows more boards to be utilized in a given amount of space. They are stacked closer together and utilize less total volume than insertion populated PC boards.

Printed circuit costs are lowered with the reduction of the number of board layers required. The elimination or reduction of the number of plated-through-holes in the board, contribute significantly to lower PC board prices.

Surface Mount assembly does not require the preparation of components that are common on insertion technology lines. Surface Mount components are set directly to the assembly line, eliminating an intermediate step.

Automatic placement equipment is available that can place Surface Mount components at the rate of a few thousand per hour to hundreds of thousands of components per hour.

Surface Mount Technology is cost effective, allowing the manufacturer the opportunity to produce smaller units and offer increased functions with the same size product.

	Page
Linear and Interface Devices	
Bipolar	4.11-2
MOS Digital-Analog	4.11-6
Package Overview	4.11-8
Tape and Reel	4.11-9

Surface Mount Technology

Linear and Interface

Bipolar

All the major bipolar analog families are now represented in surface mount packaging. Standard SOIC and PLCC packages are augmented by SOP-8 and DPAK for Linear regulators. In addition, tape and reel shipping to the updated EIA-481A is now on line for the industry's largest array of operational amplifiers, regulators, interface, data conversion, consumer, telecom and automotive Linear ICs.

Device	Function	Package
CA3146D	Transistor Array	SO-14
DAC-08CD, ED	High-Speed 8-Bit Multiplying D-to-A Converter	SO-16
LF351D	Single JFET Operational Amplifier	SO-8
LF353D	Dual JFET Operational Amplifiers	SO-8
LF411CD	Single/Dual JFET Operational Amplifier	SO-8
LF412CD	Dual JFET Operational Amplifiers	SO-8
LF441CD	Single JFET Low Power Operational Amplifier	SO-8
LF442CD	Dual JFET Low Power Operational Amplifiers	SO-8
LF444CD	Quad JFET Low Power Operational Amplifiers	SO-14
LM201AD	General Purpose Adjustable Operational Amplifier	SO-8
LM211D	High Performance Voltage Comparator	SO-8
LM224D	Quad Low Power Operational Amplifiers	SO-14
LM239D,AD	Quad Single Supply Comparators	SO-14
LM258D	Dual Low Power Operational Amplifiers	SO-8
LM285D-1.2	Micropower Voltage Reference Diode	SO-8
LM285D-2.5	Micropower Voltage Reference Diode	SO-8
LM293D	Dual Comparators	SO-8
LM301AD	General Purpose Adjustable Operational Amplifier	SO-8
LM308AD	Precision Operational Amplifier	SO-8
LM311D	High Performance Voltage Comparator	SO-8
LM317LD	Positive Adjustable 100 mA Voltage Regulator	SOP-8
LM317MDT	Positive Adjustable 500 mA Voltage Regulator	DPAK
LM324D,AD	Quad Low Power Operational Amplifiers	SO-14
LM339D,AD	Quad Single Supply Comparators	SO-14
LM348D	Quad MC1741 Operational Amplifiers	SO-14
LM358D	Dual Low Power Operational Amplifiers	SO-8
LM385D-1.2	Micropower Voltage Reference Diode	SO-8
LM385D-2.5	Micropower Voltage Reference Diode	SO-8
LM393D	Dual Comparators	SO-8
LM833D	Dual Audio Amplifiers	SO-8
LM2901D	Quad Single Supply Comparators	SO-14
LM2902D	Quad Low Power Operational Amplifiers	SO-14
LM2903D	Dual Comparators	SO-8
LM2904D	Dual Low Power Operational Amplifiers	SO-8
LM2931AD-5.0,D-5.0	Low Dropout Voltage Regulator	SOP-8
LM2931CD	Adjustable Low Dropout Voltage Regulator	SOP-8
LM3900D	Quad Single Supply Operational Amplifiers	SO-14
MC1350D	IF Amplifier	SO-8
MC1357D	FM IC with Quadrature Detector	SO-14
MC1377DW	Color Television RGB to PAL/NTSC Encoder	SO-20L
MC1378FN	Video Overlay Synchronizer	PLCC-44
MC1382DW	Multimode Monitor TTL To Analog Video	SO-24L
MC1403D	Precision Low Voltage Reference	SO-8

Device	Function	Package
MC1413D	Peripheral Driver Array	SO-16
MC1436D,CD	High Voltage Operational Amplifier	SO-8
MC1455D	Timing Circuit	SO-8
MC1458D,CD	Dual Operational Amplifiers	SO-8
MC14C88BD	Quad EIA-232-D/EIA-562 Drivers	SO-14
MC1488D	Quad EIA-232-D Drivers	SO-14
MC14C89ABD,BD	Quad EIA-232-D/EIA-562 Receivers	SO-14
MC1489D	Quad EIA-232-D Receivers	SO-14
MC1495D	Four-Quadrant Multiplier	SO-14
MC1496D	Balanced Modulator/Demodulator	SO-14
MC1723CD	Adjustable Positive Or Negative Voltage Regulator	SO-14
MC1741CD	General Purpose Operational Amplifier	SO-8
MC1747CD	Dual MC1741 Operational Amplifiers	SO-14
MC1776CD	Programmable Operational Amplifier	SO-8
MC26LS31D	Quad EIA-422/23 Drivers	SO-16
MC26LS32D	Quad EIA-422 Receivers	SO-16
MC26S10D	Quad Bus Transceiver	SO-16
MC2831AD	FM Transmitter	SO-16
MC3303D	Quad Differential-Input Operational Amplifier	SO-14
MC3335DW	Basic Dual Conversion Receiver	SO-20L
MC3346D	General Purpose Transistor Array	SO-14
MC3356DW	FSK Receiver	SO-20L
MC3359DW	Low Power Narrowband FM IF Amplifier	SO-20L
MC3361AD	Low Voltage Narrowband FM IF Amplifier	SO-16
MC3362DW	Dual Conversion Receivers	SO-28L
MC3363DW	Dual Conversion Receivers	SO-28L
MC3367DW	Low Voltage VHF Receiver	SO-28L
MC3371D	Low Voltage FM Receiver with RSSI, LC Quadrature Detector	SO-16
MC3372D	Low Voltage FM Receiver with RSSI, Ceramic Quadrature Detector	SO-16
MC3391DW	Low Side Protected Switch	SOP-8+8L
MC3401D	Quad Operational Amplifiers	SO-14
MC3403D	Quad Differential-Input Operational Amplifier	SO-14
MC3423D	Overvoltage Sensing Circuit	SO-8
MC3448AD	Quad GPIB Transceivers	SO-16
MC3450D	Quad Line Receivers	SO-16
MC3452D	Quad Line Receivers	SO-16
MC3456D	Dual Timing Circuit	SO-14
MC3458D	Dual Low Power Operational Amplifiers	SO-8
MC3486D	Quad EIA-422/23 Receivers	SO-16
MC3487D	Quad EIA-422 Drivers	SO-16
MC4558CD	Dual High Frequency Operational Amplifiers	SO-8
MC4741CD	Quad MC1741 Operational Amplifiers	SO-14
MC78L05ACD	Positive Voltage Regulator, 5 V, 100 mA	SOP-8
MC78L08ACD	Positive Voltage Regulator, 8 V, 100 mA	SOP-8
MC78L12ACD	Positive Voltage Regulator, 12 V, 100 mA	SOP-8
MC78L15ACD	Positive Voltage Regulator, 15 V, 100 mA	SOP-8
MC78M05CDT	Positive Voltage Regulator, 5 V, 500 mA	DPAK
MC78M08CDT	Positive Voltage Regulator, 8 V, 500 mA	DPAK
MC78M12CDT	Positive Votlage Regulator, 12 V, 500 mA	DPAK
MC78M15CDT	Positive Voltage Regulator, 15 V, 500 mA	DPAK
MC79L05ACD	3-Terminal Negative Fixed Voltage Regulator, –5 V, 100 mA	SOP-8
MC79L12ACD	3-Terminal Negative Fixed Voltage Regulator, –12 V, 100 mA	SOP-8
MC79L15ACD	3-Terminal Negative Fixed Voltage Regulator, –15 V, 100 mA	SOP-8
MC79M05CDT	3-Terminal Negative Fixed Voltage Regulator, –5 V, 500 mA	DPAK
MC79M12CDT	3-Terminal Negative Fixed Voltage Regulator, –12 V, 500 mA	DPAK
MC79M15CDT	3-Terminal Negative Fixed Voltage Regulator, –15 V, 500 mA	DPAK

Linear and Interface (continued)

Device	Function	Package
MC10319DW	8-Bit A/D Flash Converter	SO-24L
MC10321DW	7-Bit A/D Flash Converter	SO-20L
MC13022DW*	Medium Voltage AM Stereo C-QUAM® Decoder	SO-28L
MC13023D*	AM Front End/Tuning Stabilizer	SO-16
MC13024DW	Low Voltage C-QUAM® Receiver	SO-24L
MC13055D	VHF LAN Receiver — FSK	SO-16
MC13060D	1 Watt Audio Amplifier	SOP-8
MC33023DW,FN	High Speed (1.0 MHz) Single-Ended PWM Controller	SO-16L, PLCC-20
MC33025DW,FN	High Speed (1.0 MHz) Double-Ended PWM Controller	SO-16L, PLCC-20
MC33033DW	Brushless DC Motor Controller	SO-20L
MC33035DW	Brushless DC Motor Controller	SO-24L
MC33039D	Closed Loop Brushless Motor Adaptor (5 V ± 5% Supply)	SO-8
MC33064D-5	Undervoltage Sensing Circuit	SO-8
MC33065DW	Dual Current Mode PWM Controller	SO-16L
MC33065DW-H	Dual Current Mode PWM Controller (Off-Line)	SO-16L
MC33065DW-L	Dual Current Mode PWM Controller (DC-to-DC Converters)	SO-16L
MC33066DW	Resonant Mode (ZCS) Controller	SO-16L
MC33067DW	Resonant Mode (ZVS) Controller	SO-16L
MC33071D,AD	Single, High Speed Single Supply Operational Amplifiers	SO-8
MC33072D,AD	Dual, High Speed Single Supply Operational Amplifiers	SO-8
MC33074D,AD	Quad, High Speed Single Supply Operational Amplifiers	SO-14
MC33076D	Dual High Output Current Operational Amplifiers	SO-8
MC33077D	Dual, Low Noise High Frequency Operational Amplifiers	SO-8
MC33078D	Dual Audio, Low Noise Operational Amplifiers	SO-8
MC33079D	Low Power, Single Supply Operational Amplifier	SO-14
MC33091D	High Side TMOS Driver	SO-8
MC33110D	Low Voltage Compander	SO-14
MC33120DW*	SLIC II	SO-20L
MC33151D	Dual Inverting MOSFET Drivers	SO-8
MC33152D	Dual Noninverting MOSFET Drivers	SO-8
MC33164D-3	Micropower Undervoltage Sensing Circuit (3 V ± 5% Supply)	SO-8
MC33164D-5	Micropower Undervoltage Sensing Circuit (5 V ± 10% Supply)	SO-8
MC33171D	Single, Low Power, Single Supply Operational Amplifier	SO-8
MC33172D	Dual, Low Power, Single Suuply Operational Amplifiers	SO-8
MC33174D	Quad, Low Power, Single Supply Operational Amplifiers	SO-14
MC33178D	Dual Precision Operational Amplifiers	SO-8
MC33179D	Quad Precision Operational Amplifiers	SO-14
MC33272D	Dual Precision Bipolar Operational Amplifiers	SO-8
MC33274D	Quad Precision Bipolar Operational Amplifiers	SO-14
MC33282D	Dual Precision Low Input JFET Operational Amplifiers (Trim-in-the-Package)	SO-8
MC33284D	Quad Precision JFET Operational Amplifiers (Trim-in-the-Package)	SO-14
MC34001D,BD	Single JFET Input Operational Amplifier	SO-8
MC34002D,BD	Dual JFET Input Operational Amplifiers	SO-8
MC34011AFN	Electronic Telephone Circuit	PLCC-44
MC34012-1D	Telephone Tone Ringer	SO-8
MC34012-2D	Telephone Tone Ringer	SO-8
MC34012-3D	Telephone Tone Ringer	SO-8
MC34014DW	Telephone Speech Network with Dialer Interface	SO-20L
MC34017-1D	Telephone Tone Dialer	SO-8
MC34017-2D	Telephone Tone Dialer	SO-8
MC34017-3D	Telephone Tone Dialer	SO-8
MC34018DW	Voice Switched Speakerphone Circuit	SO-28L
MC34023DW,FN	High Speed (1.0 MHz) Single-Ended PWM Controller	SO-16L, PLCC-20
MC34025DW,FN	High Speed (1.0 MHz) Double-Ended PWM Controller	SO-16L, PLCC-20
MC34050D	EIA-422/23 Transceivers	SO-16

*To Be Introduced.

Device	Function	Package
MC34051D	EIA-422/23 Transceivers	SO-16
MC34060AD	Switchmode Pulse Width Modulation Control Circuit	SO-14
MC34063AD	Precision DC-to-DC Converter Control Circuit	SO-8
MC34064D-5	Undervoltage Sensing Circuit (5 V ± 5% Supply)	SO-8
MC34065DW	Dual Current Mode PWM Controller	SO-16L
MC34065DW-H	Dual Current Mode PWM Controller (Off-Line)	SO-16L
MC34065DW-L	Dual Current Mode PWM Controller (DC-to-DC Converter)	SO-16L
MC33066DW	Resonant Mode (ZCS) Controller	SO-16L
MC33067DW	Resonant Mode (ZVS) Controller	SO-16L
MC34071D,AD	Single, High Speed, Single Supply Operational Amplifier	SO-8
MC34072D,AD	Dual, High Speed, Single Supply Operational Amplifiers	SO-8
MC34074D,AD	Quad, High Performance, Single Supply Operational Amplifiers	SO-14
MC34080D	High Speed Decompensated ($A_{VCL} \geq 2$) JFET Input Operational Amplifier	SO-8
MC34081D	High Speed JFET Input Operational Amplifier	SO-8
MC34084DW,ADW	Quad High Speed, JFET Operational Amplifier	SO-16L
MC34085DW,ADW	Quad High Speed, JFET Operational Amplifier	SO-16L
MC34114DW	Speech Network II	SO-18L
MC34118DW	Speakerphone II	SO-28L
MC34119D	Telephone Speaker Amplifier	SO-8
MC34129D	Power Supply Controller	SO-14
MC34151D	Dual Inverting MOSFET Drivers	SO-8
MC34152D	Dual Noninverting MOSFET Drivers	SO-8
MC34164D-3	Micropower Undervoltage Sensing Circuit (3 V ± 5% Supply)	SO-8
MC34164D-5	Micropower Undervoltage Sensing Circuit (5 V ± 10% Supply)	SO-8
MC34181D	Single, Low Power, High Speed JFET Operational Amplifier	SO-8
MC34182D	Dual, Low Power, High Speed JFET Operational Amplifiers	SO-8
MC34184D	Quad, Low Power, High Speed JFET Operational Amplifiers	SO-14
MC44301DW	High Performance Video IF	SO-24L
MC44802DW	PLL Tuning Circuit w/1.3 GHz Prescaler	SO-20L
NE556D	Dual Timing Circuit	SO-14
TL064CD	Quad JFET Low Power Operational Amplifiers	SO-14
TL071CD,ACD	Single, Low Noise JFET Input Operational Amplifier	SO-8
TL072CD,ACD	Dual, Low Noise JFET Input Operational Amplifiers	SO-8
TL081CD,ACD	Single, JFET Input Operational Amplifier	SO-8
TL082CD,ACD	Dual, JFET Input Operational Amplifiers	SO-8
TL431ACD,AID,CD,ID	Programmable Precision Reference	SOP-8
UAA1041D	Automotive Direction Indicator	SO-8
UC2842AD, BD, BD1	Off-Line Current Mode PWM Controller	SO-14, SO-8
UC2843AD, BD, BD1	Current Mode PWM Controller	SO-14, SO-8
UC2844D, BD, BD1	Off-Line Current Mode PWM Controller (DC ≤ 50%)	SO-14, SO-8
UC2845D, BD, BD1	Current Mode PWM Controller (DC ≤ 50%)	SO-14, SO-8
UC3842AD, BD, BD1	Off-Line Current Mode PWM Controller	SO-14, SO-8
UC3843AD, BD, BD1	Current Mode PWM Controller	SO-14, SO-8
UC3844D, BD, BD1	Off-Line Current Mode PWM Controller (DC ≤ 50%)	SO-14, SO-8
UC3845D, BD, BD1	Current Mode PWM Controller (DC ≤ 50%)	SO-14, SO-8

MOS Digital-Analog

A/D and D/A Converters

Device	Function	Package
MC14433DW	3-1/2 Digit A/D Converter	SO-24L
MC14442FN	11-Channel 8-Bit A/D Converter with Parallel Interface	PLCC-28
MC14443DW	6-Channel A/D Converter Subsystem	SO-16L
MC14447DW	6-Channel A/D Converter Subsystem	SO-16L
MC44250FN	Triple 8-Bit Video A/D Converter	PLCC-44
MC144110DW	Hex D/A Converter with Serial Interface	SO-20L
MC144111DW	Quad D/A Converter with Serial Interface	SO-16L
MC145040FN1**	11-Channel, 8-Bit A/D Converter with Serial Interface	PLCC-20
MC145040FN2**	11-Channel, 8-Bit A/D Converter with Serial Interface	PLCC-20
MC145041FN1**	11-Channel, 8-Bit A/D Converter with Serial Interface	PLCC-20
MC145041FN2**	11-Channel, 8-Bit A/D Converter with Serial Interface	PLCC-20
MC145050DW	11-Channel, 10-Bit A/D Converter with Serial Interface	SO-20L
MC145051DW	11-Channel, 10-Bit A/D Converter with Serial Interface	SO-20L
MC145053DW	11-Channel, 10-Bit A/D Converter with Serial Interface	SO-14L

Display Drivers

Device	Function	Package
MC14489DW	Multi-Character LED Display/Lamp Driver	SO-20L
MC14495DW1	Hex-to-7 Segment Latch/Decoder ROM/Driver	SO-16L
MC14499DW	7-Segment LED Display Decoder/Driver with Serial Interface	SO-20L
MC145000FN	48-Segment Multiplexed LCD Driver (Master)	PLCC-28
MC145001FN	44-Segment Multiplexed LCD Driver (Slave)	PLCC-28
MC145453FN	33-Segment LCD Driver with Serial Interface	PLCC-44

** The digit 1 or 2 after the package designator is not a part of the package definition, but describes electrical capability of the device.

Operational Amplifiers/Comparators

Device	Function	Package
MC14573D	Quad Programmable Operational Amplifier	SO-16
MC14574D	Quad Programmable Comparator	SO-16
MC14575D	Dual Programmable Operational Amplifier and Dual Comparator	SO-16
MC14576BF	Dual Video Amplifier	SO-8
MC14577BF	Dual Video Amplifier	SO-8
MC14578D	Micro-Power Comparator Plus Voltage Follower	SO-16

Phase-Locked Loop Frequency Synthesizers

Device	Function	Package
MC145106FN	PLL Frequency Synthesizer	PLCC-20
MC145145DW1	4-Bit Data Bus Input PLL Frequency Synthesizer	SO-20L
MC145146DW1	4-Bit Data Bus Input PLL Frequency Synthesizer	SO-20L
MC145151FN2	Parallel Input PLL Frequency Synthesizer	PLCC-28
MC145152FN2	Parallel Input PLL Frequency Synthesizer	PLCC-28
MC145155FN2	Serial Input PLL Frequency Synthesizer	PLCC-20
MC145155DW2	Serial Input PLL Frequency Synthesizer	SO-20L
MC145156FN2	Serial Input PLL Frequency Synthesizer	PLCC-20
MC145156DW2	Serial Input PLL Frequency Synthesizer	SO-20L
MC145157FN2	Serial Input PLL Frequency Synthesizer	PLCC-20
MC145157DW2	Serial Input PLL Frequency Synthesizer	SO-16L
MC145158FN2	Serial Input PLL Frequency Synthesizer	PLCC-20
MC145158DW2	Serial Input PLL Frequency Synthesizer	SO-16L
MC145159FN#	Serial Input PLL Frequency Synthesizer with Analog Phase Detector	PLCC-20
MC145160DW	Dual PLL for Cordless Telephones	SO-20L
MC145161DW	Dual PLL for Cordless Telephones	SO-16L
MC145166DW	Dual PLL for Cordless Telephones	SO-16L
MC145167DW	Dual PLL for Cordless Telephones	SO-16L
MC145168DW	Dual PLL for Cordless Telephones	SO-16L
MC145170D	Serial Interface PLL Frequency Synthesizer	SO-16

** The digit 1 or 2 after the package designator is not a part of the package definition, but describes electrical capability of the device.
# Electrical variations may require a numerical suffix after the package suffix. Contact your Motorola representative for details.

MOS Digital-Analog (continued)

Remote Control Functions

Device	Function	Package
MC14469FN	Addressable Asynchronous Receiver/Transmitter	PLCC-44
MC14497	PCM Remote Control Transmitter	*
MC145026D	Remote Control Encoder	SO-16
MC145027DW	Remote Control Decoder	SO-16L
MC145028DW	Remote Control Decoder	SO-16L
MC145030DW	Remote Control Encoder/Decoder	SO-20
MC145033DW	Remote Control Encoder/Decoder	SO-28L
MC145034DW	Remote Control Encoder	SO-28L
MC145035DW	Remote Control Decoder	SO-28L

Smoke Detectors

Device	Function	Package
MC14467	Low-Cost Smoke Detector	*
MC14468	Interconnectable Smoke Detector	*
MC145010DW	Photoelectric Smoke Detector with I/O	SO-16L
MC145011DW	Photoelectric Smoke Detector with I/O	SO-16L

Telecommunications Devices

Device	Function	Package
MC14410DW	2-of-8 Tone Encoder	SO-16L
MC14411DW	Bit Rate Generator	SO-24L
MC142100DW	Crosspoint Switch with Control Memory (4 × 4 × 1)	SO-16L
MC142103	Transcoder HDB31 AMI to NRZ	*
MC143403D	Quad Line Driver (Op Amp)	SO-14
MC145403DW	EIA-232/V.28 CMOS Driver/Receiver	SO-20L
MC145404DW	EIA-232/V.28 CMOS Driver/Receiver	SO-20L
MC145405DW	EIA-232/V.28 CMOS Driver/Receiver	SO-20L
MC145406DW	EIA-232/V.28 CMOS Driver/Receiver	SO-16L
MC145407DW	EIA-232/V.28 CMOS Driver/Receiver, 5 Volts Only	SO-20L
MC145408DW	EIA-232/V.28 CMOS Driver/Receiver	SO-20L
MC145412	Pulse/Tone Repertory Dialer (Nine 18-Digit Memory)	*
MC145416DW	Pulse/Tone Repertory Dialer (13-18 Digit Memory)	SO-20L
MC145421DW	UDLT II Master	SO-24L
MC145422DW	UDLT Master	SO-24L
MC145425DW	UDLT II Slave	SO-24L
MC145426DW	UDLT Slave	SO-24L
MC145428DW	Data Set Interface Circuit	SO-20L
MC145436DW	DTMF Decoder	SO-16L
MC145439	Transcoder B8ZS, B6ZS, HDB3 to NRZ	*
MC145442DW	300-Baud CCITT V.21 Single-Chip Modem	SO-20L
MC145443DW	300-Baud Bell 103 Single-Chip Modem	SO-20L
MC145447DW	Calling Line I.D. Receiver with Ring Detector	SO-16L
MC145472FE	ISDN U-Interface Transceiver	CQFP-68
MC145475DW	ISDN S/T Transceiver	SO-28L
MC145488FN	Dual Data Link Controller	PLCC-68
MC145502FN	PCM Codec/Filter	PLCC-28
MC145503DW	PCM Codec/Filter	SO-16L
MC145505DW	PCM Codec/Filter	SO-16L
MC145532DW	ADPCM Transcoder	SO-16L
MC145554DW	PCM Codec/Filter (TP3054 Compatible)	SO-16L
MC145557DW	PCM Codec/Filter (TP3057 Compatible)	SO-16L
MC145564DW	PCM Codec/Filter (TP3064 Compatible)	SO-20L
MC145567DW	PCM Codec/Filter (TP3067 Compatible)	SO-20L
MC145705DW	EIA-232/V.28 CMOS Driver/Receiver, 5 Volts Only	SO-20L
MC145706DW	EIA-232/V.28 CMOS Driver/Receiver, 5 Volts Only	SO-20L
MC145707DW	EIA-232/V.28 CMOS Driver/Receiver, 5 Volts Only	SO-20L

* Introduction of this device in surface mount packages is dependent on market demand.

Surface Mount Technology Package Overview

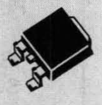

CASE 396A
PLASTIC
DPAK
DT SUFFIX

CASE 751
PLASTIC
SO-8, SOP-8
D. D1 SUFFIX

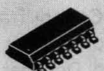

CASE 751A
PLASTIC
SO-14
D SUFFIX

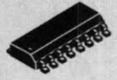

CASE 751B
PLASTIC
SO-16
D SUFFIX

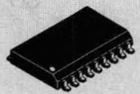

CASE 751C
PLASTIC
SO-18L
DW SUFFIX

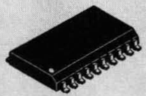

CASE 751D
PLASTIC
SO-20L
DW SUFFIX

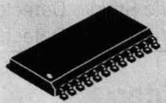

CASE 751E
PLASTIC
SO-24L
DW SUFFIX

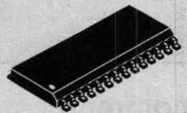

CASE 751F
PLASTIC
SO-28L
DW SUFFIX

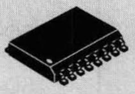

CASE 751G
PLASTIC
SO-8+8L, SO-16L
DW SUFFIX

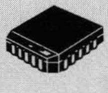

CASE 775
PLASTIC
PLCC-20
FN SUFFIX

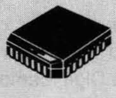

CASE 776
PLASTIC
PLCC-28
FN SUFFIX

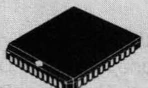

CASE 777
PLASTIC
PLCC-44
FN SUFFIX

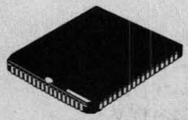

CASE 779
PLASTIC
PLCC-68
FN SUFFIX

Tape and Reel

Standard Bipolar Logic, Bipolar Analog and MOS Integrated Circuits

Motorola has now added the convenience of Tape and Reel packaging for our growing family of standard Integrated Circuit products. Three reel sizes are available, for all but the largest types, to support the requirements of both first and second generation pick-and-place equipment. The packaging fully conforms to the latest EIA-481A specification. The antistatic embossed tape provides a secure cavity, sealed with a peel-back cover tape.

Mechanical Polarization

SOIC DEVICES

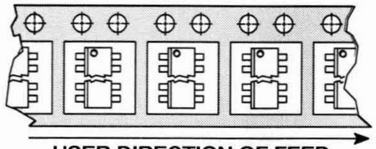

PLCC DEVICES

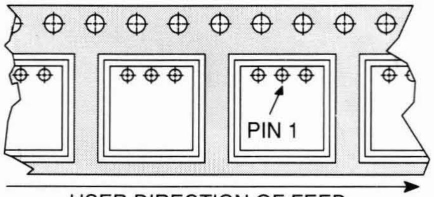

DPAK DEVICES

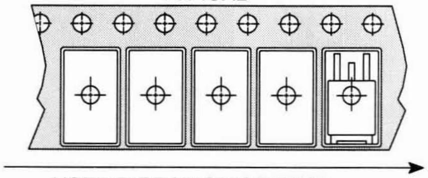

Package	Tape Width (mm)	Device[1] per Reel	Reel Size (inch)	Device Suffix
SO-8, SOP-8	12	2,500	13	R2
SO-14	16	2,500	13	R2
SO-16	16	2,500	13	R2
SO-16L, SO-8+8L WIDE	16	1,000	13	R2
SO-20L WIDE	24	1,000	13	R2
SO-24L WIDE	24	1,000	13	R2
SO-28L WIDE	24	1,000	13	R2
PLCC-20	16	1,000	13	R2
PLCC-28	24	500	13	R2
PLCC-44	32	500	13	R2
PLCC-52	32	500	13	R2
PLCC-68	44	250	13	R2
PLCC-84	44	250	13	R2
TO-226AA (TO-92)[2]	18	2,000	13	RA, RB RE, RM, or RP (Ammo Pack) only
DPAK	16	2,500	13	RK

Notes: 1. Minimum order quantity is 1 reel. Distributors/OEM customers may break lots or reels at their option, however broken reels may not be returned.
2. Integrated Circuits in TO-226AA packages are available in Styles A, B and E only, with optional "Ammo Pack" (Suffix RM or RP). For ordering information please contact your local Motorola Semiconductor Sales Office.

Discrete Products

In Brief . . .

Many leading semiconductor manufacturers have de-emphasized or eliminated discrete components from their product portfolio. This is not the case with Motorola.

At Motorola, continuing major investments in research and development for discrete product categories underscore a commitment to remain the world leader in both the scope and breadth of these product lines.

But things are changing significantly and the changes are not limited simply to the expansion of product lines through the enhancement of specification limits.

In addition to the improvements with higher performance, faster speed, greater efficiency, lower cost and assembly compatible packaging, Motorola will continue to integrate additional features, provide performance and packaging unique to specific applications, and offer state-of-the-art packaging options.

Size reduction continues to be an important factor in system design. This same factor has propelled surface mount packaging into the limelight of semiconductor device change. Recognizing this trend, Motorola discrete components has developed and will continue to develop a broad family of surface mount packages across all product lines.

But more important is the changing nature of the entire concept of discrete componentry. Integration in semiconductor components is not new, but increasing integration in products that are classified as "discrete" devices is a recent occurrence. This trend is generating families of more reliable, intelligent semiconductor products. Several examples of product lines that include this type of integration are SMARTDISCRETES, SMALLBLOCK, Sensors and RF products. For example, current RF technology enables a transistor to have thousands of transistors on a single die with built-in resistors and also includes inductors and capacitors in the package to enhance performance characteristics.

Thus the field of "discrete products" is changing both in definition and in perspective toward a "multi-function" capability and Motorola will continue to be the manufacturer of choice for all your discrete semiconductor requirements.

Page

Motorola Device Classifications 5.0-2
Small-Signal Devices 5.1-1
TVS (Transient Voltage Suppressors)/Zener Regulator and Reference Diodes 5.2-1
Power Transistor Products 5.3-1
TMOS Power MOSFETs 5.3-2
Bipolar Power Transistors 5.3-15
Power Modules 5.3-37
Rectifiers 5.4-1
Thyristors & Triggers 5.5-1
Optoelectronic Devices 5.6-1
Sensors 5.7-1
RF Products 5.8-1
Leadform Dimensions 5.9-1
Tape and Reel Specifications and Packaging Specifications 5.10-1
Package Outline Dimensions and Footprints 5.11-1

MOTOROLA DEVICE CLASSIFICATIONS

In an effort to provide up-to-date information to the customer regarding the status of any given device, Motorola has classified all devices into three categories: Preferred devices, Current products and Not Recommended for New Design products.

A Preferred type is a device which is recommended as a first choice for future use. These devices are "preferred" by virtue of their performance, price, functionality, or combination of attributes which offer the overall "best" value to the customer. This category contains both advanced and mature devices which will remain available for the foreseeable future.

"Preferred devices" are listed in bold, italic within each Product Group's device tables.

Device types identified as "current" may not be a first choice for **new** designs, but will continue to be available because of the popularity and/or standardization or volume usage in current production designs. These products can be acceptable for new designs but the preferred types are considered better alternatives for long term usage.

Any device that has not been identified as a "preferred device" is a "current" device.

Products designated as "Not Recommended for New Design" may become obsolete as dictated by poor market acceptance, or a technology or package that is reaching the end of its life cycle. Devices in this category have an uncertain future and do not represent a good selection for new device designs or long term usage.

The Discrete section of the *Master Selection Guide Rev 5* does not contain any "Not Recommended for New Design" devices.

Note: The Communications, Power and Signal Technologies Group's section in *Master Selection Guide Rev 5* has identified those devices that are a preferred type. No other product family's devices have been identified as such in this edition of the *Master Selection Guide.*

Small-Signal Transistors, FETs and Diodes

In Brief . . .

This section highlights semiconductors that are the most popular and have a history of high usage for the most applications.

It covers a wide range of Small-Signal plastic and metal-can semiconductors.

A large selection of encapsulated plastic transistors, FETs and diodes are available for surface mount and insertion assembly technology. Plastic packages include TO-92 (TO-226AA), 1 Watt TO-92 (TO-226AE), SOT-23, SC-59, and SOT-223. Plastic multiples are available in 14-pin and 16-pin dual-in-line packages for insertion applications: SO-8, SO-14 and SO-16 for surface mount applications.

Metal-can packages are available for applications requiring higher power dissipation or having hermetic requirements in TO-18 (TO-206AA) and TO-39 (TO-205AD).

Page

Bipolar Transistors
- Plastic-Encapsulated Transistors 5.1-2
- Plastic-Encapsulated Multiple Transistors 5.1-8
- Plastic-Encapsulated Surface Mount Transistors 5.1-10
- Metal-Can Transistors 5.1-16

Field-Effect Transistors
- JFETs 5.1-19
- MOSFETs 5.1-21
- Surface Mount FETs 5.1-22

Tuning and Switching Diodes
- Tuning Diodes — Abrupt Junction 5.1-24
- Tuning Diodes — Hyper-Abrupt Junction 5.1-28
- Hot-Carrier Diodes — Schottky 5.1-32
- Switching Diodes 5.1-33
- Multiple Switching Diodes 5.1-36

Plastic-Encapsulated Transistors

Motorola's small-signal TO-226 plastic transistors encompass hundreds of devices with a wide variety of characteristics for general-purpose, amplifier and switching applications. The popular high-volume package combines proven reliability, performance, economy and convenience to provide the perfect solution for industrial and consumer design problems. All devices are laser marked for ease of identification and shipped in antistatic containers, as part of Motorola's ongoing practice of maintaining the highest standards of quality and reliability.

CASE 29-03
TO-226AE
1-WATT (TO-92)

CASE 29-04
TO-226AA
(TO-92)

Table 1. Plastic-Encapsulated General-Purpose Transistors

These general-purpose transistors are designed for small-signal amplification from dc to low radio frequencies. They are also useful as oscillators and general-purpose switches. Complimentary devices shown where available (Tables 1–4).

NPN	PNP	$V_{(BR)CEO}$ Volts Min	f_T @ I_C MHz Min	mA	I_C mA Max	h_{FE} @ I_C Min	Max	mA	NF dB Max	Style
Case 29-04 — TO-226AA (TO-92)										
MPS8099	***MPS8599***	80	150	10	200	100	300	1.0	—	1
MPSA06	***MPSA56***	80	100	10	500	100	—	100	—	1
2N4410	—	80	60	10	250	60	400	10	—	1
BC546	BC556	65	150	10	100	120	450	2.0	10	17
BC546A	BC556A	65	150	10	100	120	220	2.0	10	17
BC546B	BC556B	65	150	10	100	180	450	2.0	10	17
MPSA05	MPSA55	60	100	10	500	50	—	100	—	1
	MPS2907A	60	200	50	600	100	300	150	—	1
BC182	BC212	50	200	10	100	120	460	2.0	10	14
BC237B	BC307B	45	150	10	100	200	460	2.0	10	17
BC337	BC327	45	210(1)	10	800	100	600	100	—	17
BC547	BC557	45	150	10	100	120	450	2.0	10	17
BC547A	BC557A	45	150	10	100	120	220	2.0	10	17
BC547B	BC557B	45	150	10	100	180	450	2.0	10	17
BC547C	BC557C	45	150	10	100	380	800	2.0	10	17
MPSA20	MPSA70	40	125	5.0	100	40	400	5.0	—	1
MPS2222A		40	300	20	600	100	300	150	—	1
2N4401	***2N4403***	40	200	20	600	100	300	150	—	1
2N4400	2N4402	40	150	20	600	50	150	150	—	1
MPS6602	***MPS6652***	40	100	50	1000	50	—	500	—	1
2N3903	2N3905	40	200	10	200	50	150	10	6.0	1
2N3904	***2N3906***	40	250	10	200	100	300	10	5.0	1
BC548		30	300(1)	10	100	120	300	2.0	10	17
BC548A		30	300(1)	10	100	120	220	2.0	10	17
BC548B	BC558B	30	300(1)	10	100	180	450	2.0	10	17
BC548C		30	300	10	100	380	800	2.0	10	17
2N4123	2N4125	30	200	10	200	50	150	2.0	6.0	1
2N4124	2N4126	25	250	10	200	120	360	2.0	5.0	1
BC338	BC328	25	210(1)	10	800	100	600	100	—	17

(1) Typical

Devices listed in bold, italic are Motorola preferred devices.

Small-Signal Bipolar Transistors — Plastic-Encapsulated Transistors (continued)

Table 1. Plastic-Encapsulated General-Purpose Transistors (continued)

Case 29-03 — TO-226AE (1-WATT TO-92)

NPN	PNP	$V_{(BR)CEO}$ Volts Min	f_T @ I_C MHz Min	mA	I_C A Max	h_{FE} @ I_C Min	Max	mA	$V_{CE(sat)}$ @ I_C @ I_B Volts Max	mA	mA	Style
BDB01D	BDB02D	100	50	200	0.5	40	400	100	0.7	1000	100	1
BDC01D	BDC02D	100	50	200	0.5	40	400	100	0.7	1000	100	14
BDB01C	BDB02C	80	50	200	0.5	40	400	100	0.7	1000	100	1
BDC01C	BDC02C	80	50	200	0.5	40	400	100	0.7	1000	100	14
MPS6717		80	50	200	0.5	80	—	50	0.5	250	10	1
MPSW06	***MPSW56***	80	50	200	0.5	80	—	50	0.4	250	10	1

Table 2. Plastic-Encapsulated Low-Noise and Good h_{FE} Linearity

These devices are designed to use on applications where good h_{FE} linearity and low-noise characteristics are required: Instrumentation, hi-fi preamplifier.

NPN	PNP	$V_{(BR)CEO}$ Volts	h_{FE} @ I_C Min	Max	mA	V_T mV Typ	NF[4] dB Max	f_T [5] MHz Typ	Style
Case 29-04 — TO-226AA (TO-92)									
—	MPS4249	60	100	300	0.1	—	3.0	100	1
—	***2N5087***	50	250	800	0.1	—	2.0	40	1
—	2N5086	50	150	500	0.1	—	3.0	40	1
MPS6428	—	50	250	650	0.1	7.0[7]	3.5[8]	100[2]	1
BC239	BC309	45	120	800	2.0	9.5	2.0	240	17
BC550B	BC560B	45	180	460	2.0	8.0	2.5	250	17
BC550C	BC560C	45	380	800	2.0	8.0	2.5	250	17
MPSA18	—	45	500	—	2.0	7.0	—	160	1
MPS3904	MPS3906	40	100	300	10	—	5.0	200	1
—	MPS4250	40	250	—	10	—	2.0	250	1
BC549B	BC559B	30	180	800	2.0	8.0	2.5	250	17
BC549C	BC559C	30	380	800	2.0	8.0	2.5	250	17
2N5088	—	30	350	—	2.0	—	3.0	150	1
2N5089[6]	—	25	450	—	2.0	—	2.0	150	1
MPS6521	MPS6523	25	300	—	2.0	—	3.0	340[6]	1

(2) Min
(4) V_T: Total Input Noise Voltage (see BC413/BC414 and BC415/BC416 Data Sheets) at R_S = 2.0 kΩ, I_C = 200 μA, V_{CE} = 5.0 Volts.
(5) N_F: Noise Figure at R_S = 2.0 kΩ, I_C = 200 μA, V_{CE} = 5.0 Volts. f = 30 Hz to 15 kHz.
(6) "S" version.
(7) R_S = 10 kΩ, BW = 1.0 Hz, f = 100 MHz
(8) R_S = 500 Ω, BW = 1.0 Hz, f = 10 MHz

Devices listed in bold, italic are Motorola preferred devices.

Table 3. Plastic-Encapsulated Darlington Transistors

Darlington amplifiers are cascade transistors used in applications requiring very high-gain and input impedance. These devices have monolithic construction.

				h_{FE} @ I_C			$V_{CE(sat)}$					
NPN	PNP	$V_{(BR)CEO}$ Volts	I_C Max	Min	Max	mA	Volts Max	I_C mA	I_B mA	f_T Min	I_C	Style
Case 29-03 — TO-226AE (1-WATT TO-92)												
MPSW45A	—	50	1000	25K	—	200	1.5	1000	2.0	100	200	1
—	***MPSW64***	30	1000	20K	—	100	1.5	100	0.1	125	10	1
Case 29-04 — TO-226AA (TO-92)												
MPSA29	—	100	500	10K	—	100	1.4	100	0.1	125	10	1
BC373	—	80	1000	25K	160K	100	1.0	250	0.25	100	100	1
MPSA27	MPSA77	60	500	10K	—	100	1.5	100	0.1	125	10	1
BC618	—	55	1000	10K	50K	200	1.1	200	0.2	150	500	17
	MPSA75	40	500	10K	—	100	1.5	100	0.1	125	10	1
2N6427	—	40	500	20K	200K	100	1.5	500	0.5	125	10	1
2N6426	—	40	500	30K	300K	100	1.5	500	0.5	125	10	1
MPSA14	***MPSA64***	30	500	20K	—	100	1.5	100	0.1	125	10	1
MPSA13	MPSA63	30	500	10K	—	100	1.5	100	0.1	125	10	1
BC517	—	30	400	30K	—	20	1.0	100	0.1	125	10	17

Table 4. Plastic-Encapsulated High-Current Transistors

The following table is a listing of devices that are capable of handling a higher current range for small-signal transistors.

			f_T @ I_C			h_{FE} @ I_C			$V_{CE(sat)}$ @ I_C @ I_B			
NPN	PNP	$V_{(BR)CEO}$ Volts Min	MHz Min	mA	I_C mA Max	Min	Max	mA	Volts Max	mA	mA	Style
Case 29-03 — TO-226AE (1-WATT TO-92)												
MPS6715	MPS6727	40	50	50	1000	50	—	1000	0.5	1000	100	1
MPSW01A	***MPSW51A***	40	50	50	1000	50	—	1000	0.5	1000	100	1
Case 29-04 — TO-226AA (TO-92)												
BC489	BC490	80	200/150(1)	50	1000	60	400	100	0.3/0.5	1000	100	17
BC639	BC640	80	60	10	1000	40	160	150	0.5	500	50	14
MPS651	***MPS751***	60	75	50	2000	75	—	1000	0.5	2000	200	1
MPS650	MPS750	40	70	50	2000	75	—	1000	0.5	2000	200	1
BC368	BC369	20	60	10	1000	60	—	1000	0.5	1000	100	1

(1) Typical

Devices listed in bold, italic are Motorola preferred devices.

Small-Signal Bipolar Transistors — Plastic-Encapsulated Transistors (continued)

Table 5. Plastic-Encapsulated High-Voltage Amplifier Transistors

These high-voltage transistors are designed for driving neon bulbs and indicator tubes, for direct line operation, and for other applications requiring high-voltage capability at relatively low collector current. These devices are listed in order of decreasing breakdown voltage ($V_{(BR)CEO}$).

Device Type	$V_{(BR)CEO}$ Volts Min	I_C Amp Max	h_{FE} @ I_C Min	mA	$V_{CE(sat)}$ @ I_C & I_B Volts Max	mA	mA	f_T @ I_C MHz Min	mA	Style
Case 29-03 — TO-226AE (1-WATT TO-92) — NPN										
BDC05	300	0.5	40	25	2.0	20	2.0	60	10	14
MPSW42	300	0.3	40	30	0.5	20	2.0	50	10	1
Case 29-03 — TO-226AE (1-WATT TO-92) — PNP										
BDC06	300	0.5	40	25	2.0	20	2.0	60	10	14
MPSW92	300	0.3	25	30	0.5	20	2.0	50	10	1
Case 29-04 — TO-226AA (TO-92) — NPN										
BF844	400	0.5	40	30	0.5	10	1.0	50	10	1
MPSA44	400	0.3	40	100	0.75	50	5.0	20	10	1
2N6517	350	0.5	30	30	0.3	10	1.0	40	10	1
BF393	300	0.5	40	10	0.2	20	2.0	50	10	1
MPSA42	300	0.5	40	10	0.5	20	2.0	50	10	1
2N5551	160	0.6	80	10	0.15	10	1.0	100	10	1
Case 29-04 — TO-226AA (TO-92) — PNP										
BF493S	350	0.5	40	10	20	20	2.0	50	10	1
2N6520	350	0.5	30	30	0.3	10	1.0	40	10	1
MPSA92	300	0.5	40	10	0.5	20	2.0	50	10	1
2N6519	300	0.5	45	30	0.3	10	1.0	40	10	1
2N5401	150	0.6	60	10	0.2	10	1.0	100	10	1

Case 29-04 — TO-226AA (TO-92)

NPN	PNP	$V_{(BR)CEO}$ Volts Min	I_C Amp Cont	h_{FE} @ I_C Min	mA	$V_{CE(sat)}$ @ I_C @ I_B Volts Max	mA	mA	f_T @ I_C MHz Min	mA	Style
BF420	BF421	300	0.1	40	25	2.0	20	2.0	60	10	14
BF422	BF423	250	0.1	50	25	2.0	20	2.0	60	10	14

Devices listed in bold, italic are Motorola preferred devices.

Table 6. Plastic-Encapsulated RF Transistors

The RF transistors are designed for small-signal amplification from RF to VHF/UHF frequencies. They are also used as mixers and oscillators in the same frequency ranges.

Device Typ	$V_{(BR)CEO}$ Volts Min	I_C mA Max	h_{FE} @ I_C Min	mA	V_{CE} V	f_T MHz Typ	CRE/CRB pF Max	NF dB Typ	f MHz	Style
Case 29-04 — TO-226AA (TO-92) — NPN										
BF224	30	50	30	7.0	10	600	0.28	2.5	100	21
MPSH24	30	100	30	8.0	10	400(2)	0.36	—	—	2
MPSH20	30	100	25	4.0	10	400(2)	0.65	—	—	2
MPSH07A(9)	30	25	20	3.0	10	400(2)	0.3	3.2(3)	100	1
MPS3866	30	400	10	50	5.0	500(2)	—	—	—	1
MPSH11	25	25	60	4.0	10	660(2)	—	—	—	2
MPSH10	25	100	60	4.0	10	1500	0.7	—	—	2
BF199	25	100	40	7.0	10	750	0.35	2.5	35	21
BF959	20	100	40	20	10	800	0.65	3.0	200	21
MPS6568A	20	50	20	4.0	5.0	375(2)	0.65	3.3(3)	200	2
MPSH17	15	100	25	5.0	10	1600	0.9	6.0(3)	200	2
MPS918	15	50	20	8.0	10	800	1.7	6.0(3)	60	1
MPS5179	12	50	25	3.0	1.0	2000	—	4.5(3)	200	1
MPS3563	12	50	20	8.0	10	800	1.7	6.0(3)	60	1
MPS6595	12	50	25	10	5.0	1200(2)	1.3	—	—	1
Case 29-04 — TO-266AA (TO-92) — PNP										
MPSH81	20	50	60	5.0	10	700	0.85	—	—	2
MPSH69	15	50	30	10		2000	0.3	—	—	1

(2) Min
(3) Max
(9) AGC Capable

Table 7. Plastic-Encapsulated High-Speed Saturated Switching Transistors

The transistors listed in this table are specially optimized for high-speed saturated switches. They are heavily gold doped and processed to provide very short switching times and low output capacitance (below 6.0 pF). The transistors are listed in order of decreasing turn-on time (t_{on}).

Device Type	t_{on} & t_{off} @ I_C ns Max	ns Max	mA	$V_{(BR)CEO}$ Volts Min	h_{FE} @ I_C Min	mA	$V_{CE(sat)}$ @ I_C & I_B Volts Max	mA	mA	f_T @ I_C MHz Min	mA	Style
Case 29-04 — TO-226AA (TO-92) — NPN												
2N4264	25	35	10	15	40	10	0.22	10	1.0	300	10	1
2N4265	25	35	10	12	100	10	0.22	10	1.0	300	10	1
MPS3646	18	28	300	15	30	30	0.2	30	3.0	350	30	1
MPS2369A	12	18	10	15	40	10	0.2	10	1.0	500	10	1
Case 29-04 — TO-226AA (TO-92) — PNP												
MPS3640	25	35	50	12	30	10	0.2	10	1.0	500	10	1
MPS4258	15	20	10	12	30	50	0.15	10	1.0	700	10	1
MPS5771	15	20	10	15	35	10	0.18	10	1.0	850	10	1

Devices listed in bold, italic are Motorola preferred devices.

Small-Signal Bipolar Transistors — Plastic-Encapsulated Transistors (continued)

Table 8. Plastic-Encapsulated Choppers

Devices are listed in decreasing $V_{(BR)EBO}$.

Device Type	$V_{(BR)EBO}$ Volts Min	I_C Amp(1) Max	h_{FE} @ I_C Min	mA	$V_{CE(sat)}$ @ I_C & I_B Volts Max	mA	mA	f_T @ I_C MHz Min	mA	Style
Case 29-04 — TO-226AA (TO-92) — NPN										
MPSA17	15	100	200	5.0	0.25	10	1.0	100	5.0	1
MPSA16	12	100	200	5.0	0.25	10	1.0	80	5.0	1
Case 29-04 — TO-226AA (TO-92) — PNP										
MPS404A	–25	–150	30	–12	–0.2	–24	1.0	—	—	1

(1) Typical

Table 9. Plastic-Encapsulated Telecom Transistors

These devices are special product ranges intended for use in telecom applications.

Device Type	$V_{(BR)CEO}$ Volts	P_D mW 25°C Amb	I_C mA Cont	h_{FE} @ I_C @ V_{CE} Min	Max	mA	Volts	f_T MHz Min	Style
Case 29-04 — TO-226AA (TO-92) — NPN									
P2N2222A	40	625	600	75	—	10	10	300	17
PBF259,S(10)	300	625	500	25	—	1.0	10	40	1
Case 29-04 — TO-226AA (TO-92) — PNP									
P2N2907A	60	625	600	100	—	10	10	200	17
PBF493,S(11)	300	625	500	40	—	1.0	10	40	1

(10) "S" version, h_{FE} Min 60 @ I_C = 20 mA, V_{CE} = 10 V.
(11) "S" version, h_{FE} Min 40 @ I_C = 0.1 mA, V_{CE} = 1.0 V.

Devices listed in bold, italic are Motorola preferred devices.

Plastic-Encapsulated Multiple Transistors

The manufacturing trend has been toward printed circuit board design with requirements for smaller packages with more functions. In the case of discrete components the use of the multiple device package helps to reduce board space requirements and assembly costs.

Many of the most popular devices are offered in the standard plastic DIP and surface mount IC packages. This includes small-signal NPN and PNP bipolar transistors, N-channel and P-channel FETs, as well as diode arrays.

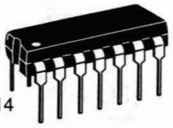

CASE 646-06
(TO-116)
STYLE 1

CASE 751B-03
SO-16
STYLE 1

Specification Tables

The following short form specifications include Quad and Dual bipolar transistors listed in alphanumeric order. Some columns denote two different types of data indicated by either **bold** or *italic* typeface. See key and headings for proper identification. This applies to Table 1 and 2 of this section only.

KEY TYPE NO.	ID	P_D Watts One Die Only	Ref. Point	V_{CE} Volts	Subscript	I_C Amp Max	h_{FE} Min @ I_C	Unit	f_T MHz Min	C_{ob} pF Max	**h_{FE1} / h_{FE2}** / *t_{on} ns Max*	**ΔV_{BE} mV Max** / *t_{off} ns Max*	**G_p dB Min** / *V_{CE} (sat) @ Volts Max*	**NF dB Max** / *I_C / I_B*	**@ f** / & I_C	Unit

Alphanumeric listing type numbers (TYPE NO.)

Identification Code (ID)

1st Letter: Polarity
C —both types in multiple device
N — NPN
P — PNP
2nd Letter: Use
A — General Purpose Amplifier
E — Low Noise Audio Amplifier
F — Low Noise RF Amplifier
G — General Purpose Amplifier and Switch
H — Tuned RF/IF Amplifier
M — Differential Amplifier
S — High Speed Switch
D — Darlington

P_D: Power Dissipation specified at 25°C. Single die rating.
Ref. Point: A — Ambient Temerature
C — Case Temperature

V_{CE}: Rated Minimum Collector-Emitter Voltage
Subscript letter identifies base termination listed below in order of preference.
SUBSCRIPT:
0 — V_{CEO}, open

I_C: Continuous (DC) Collector Current

h_{FE}: Common-emitter DC Current Gain.
Units for test current:
A — ampere
m — mA
u — µA

f_T: Current-Gain-Bandwidth Product.

C_{ob}: Output Capacitance, common-base. Shown without distinction:
C_{cb} — Collector-Base Capacitance
C_{re} — Common-Emitter Reverse Transfer Capacitance

h_{FE1}/h_{FE2} — Current Gain Ratio
V_{BE} — Differential Base Voltage $|V_{BE1} - V_{BE2}|$.
Differential Amplifiers
t_{on} — turn-on time
t_{off} — turn-off time

G_p — Power Gain
NF — Noise Figure
f — Test Frequency
AUD — 10–15 kHz
Frequency Units:
H — Hertz M — MHz
K — kHz G — GHz
$V_{CE(sat)}$ — Collector-Emitter Saturation Voltage
I_C — Test Current
Current Units: u — µA
m — mA
A — Amp

Small-Signal Bipolar Transistors — Plastic-Encapsulated Multiple Transistors (continued)

Table 1. Plastic-Encapsulated Multiple Transistors — Quad

The following table is a listing of the most popular multiple devices available in the plastic DIP package. These devices are available in NPN, PNP, and NPN/PNP configurations. (See note.)

Type No.	I_D	P_D Watts One Die Only	V_{CEO} Volts	I_C Amp Max	h_{FE} Min	@ I_C	f_T MHz Min	C_{ob} pF Max	**h_{FE1} / h_{FE2}** / *t_{on} ns Max*	**ΔV_{BE} mV Max** / *t_{off} ns Max*	**G_p dB Min** / *$V_{CE(sat)}$ @ Volts Max*	**NF dB Max Typ(1)** @ / *I_C / I_B*	**f** / *I_C*
Case 646-06 — TO-116													
MPQ2222A	NA	0.65	40	0.5	100	150 m	200	8.0	*35(1)*	*285(1)*	*0.3*	*10*	*150 m*
MPQ2369	NS	0.5	15	0.5	40	10 m	450	4.0	*9.0(1)*	*15(1)*	*0.25*	*10*	*10 m*
MPQ2483	NA	0.625	40	0.05	150	1.0 m	50					**3.0(1)**	**AUD**
MPQ2484	NA	0.625	40	0.05	300	1.0 m	50					**2.0(1)**	**AUD**
MPQ2907A	PA	0.65	60	0.6	100	150 m	200	8.0	*45(1)*	*180(1)*	*0.4*	*10*	*150 m*
MPQ3467	PS	0.75	40	1.0	20	500 m	125	25	*40*	*90*	*0.5*	*10*	*500 m*
MPQ3725	NS	1.0	40	1.0	25	500 m	250	10	*35*	*60*	*0.45*	*10*	*500 m*
MPQ3762	PS	0.75	40	1.5	35	150 m	150	15	*50*	*120*	*0.55*	*10*	*500 m*
MPQ3798	PA	0.625	40	0.05	150	0.1 m	60	4.0				**3.0(1)**	**AUD**
MPQ3799	PA	0.625	60	0.05	300	0.1 m	60	4.0				**2.0(1)**	**AUD**
MPQ3904	NG	0.5	40	0.2	75	10 m	250	4.0	*37(1)*	*136(1)*	*0.2*	*10*	*10 m*
MPQ3906	PG	0.5	40	0.2	75	10 m	200	4.5	*43(1)*	*155(1)*	*0.25*	*10*	*10 m*
MPQ6001	CG	0.65	30	0.5	40	150 m	200	8.0	*30(1)*	*225(1)*	*0.4*	*10*	*150 m*
MPQ6002	CG	0.65	30	0.5	100	150 m	200	8.0	*30(1)*	*225(1)*	*0.4*	*10*	*150 m*
MPQ6100A	CA	0.5	45	0.05	150	1.0 m	50	4.0				**4.0(1)**	**AUD**
MPQ6426	ND	0.5	30	0.5	10K	100 m	125	8.0	—	—	*1.5*	*10*	*100 m*
MPQ6501	CG	0.65	30	0.5	40	150 m	200	8.0	*30(1)*	*225(1)*	*0.4*	*10*	*150 m*
MPQ6502	CG	0.65	30	0.5	100	150 m	200	8.0	*30(1)*	*225(1)*	*0.4*	*10*	*150 m*
MPQ6600A1	CA	0.5	45	0.05	150	1.0 m	50	4.0	*0.8*	*20*	*0.25*	*10*	*1.0 m*
MPQ6700	CA	0.5	40	0.2	70	10 m	200	4.5			*0.25*	*10*	*1.0 m*
MPQ6842	CA	0.75	40	0.5	70	10 m	300	4.5	*45*	*150*	*0.15*	*10*	*0.5 m*
MPQ7043	NA	0.75	250	0.5	25	1.0 m	50	5.0			*0.5*	*10*	*20 m*
MPQ7042	NA	0.75	200	0.5	25	1.0 m	50	5.0			*0.5*	*10*	*20 m*
MPQ7051	CG	0.75	150	0.5	25	1.0 m	50	6.0			*0.7*	*10*	*20 m*
MPQ7093	PA	0.75	250	0.5	25	1.0 m	50	5.0			*0.5*	*10*	*20 m*

(1) Typical

NOTE: Some columns show 2 different types of data indicated by either **bold** or *italic* typefaces. See key and headings.

Table 2. Plastic-Encapsulated Multiple Transistors — Quad Surface Mount

The following table is a listing of the most popular multiple devices available in the plastic SOIC surface mount package. These devices are available in NPN, PNP, and NPN/PNP configurations.

Device	$V_{(BR)CEO}$	$V_{(BR)CBO}$	h_{FE} @ I_C Min	mA	f_T @ I_C MHz Min	mA
Case 751B-03 — SO-16						
MMPQ2222A	40	75	40	500	200	20
MMPQ2369	15	40	20	100	450	10
MMPQ2907A	50	60	50	500	200	50
MMPQ3467	40	40	20	500	125	50
MMPQ3725	40	60	25	500	250	50
MMPQ3799	60	60	300	0.5	60	1.0
MMPQ3904	40	60	75	10	250	10
MMPQ3906	40	40	75	10	200	10
MMPQ6700 (12)	40	40	70	10	200	10

(12) NPN/PNP

Devices listed in bold, italic are Motorola preferred devices.

Plastic-Encapsulated Surface Mount Transistors

This section of the selector guide lists the small-signal plastic devices that are available for surface mount applications. These devices are encapsulated with the latest state-of-the-art mold compounds that enhance reliability and exhibit excellent performance in high temperature and high humidity environments. This package offers higher power dissipation capability for small-signal applications.

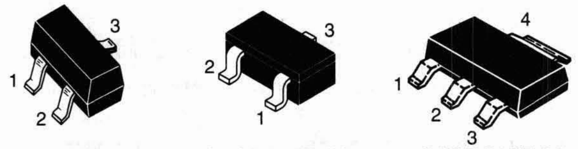

CASE 318-07 TO-236AB SOT-23	CASE 318D-03 SC-59	CASE 318E-04 SOT-223

Table 1. Plastic-Encapsulated Surface Mount General-Purpose Transistors

The following tables are a listing of small-signal general-purpose transistors in the SOT-23 and SC-59 surface mount packages. These devices are intended for small-signal amplification for DC, audio, and lower RF frequencies. They also have applications as oscillators and general-purpose, low voltage switches.

Pinout: 1-Base, 2-Emitter, 3-Collector
Devices are listed in order of descending breakdown voltage.

Device	Marking	$V_{(BR)CEO}$	h_{FE} @ I_C Min	Max	mA	f_T MHz Min
Case 318-07 — TO-236AB (SOT-23) — NPN						
MMBT8099LT1	KB	80	100	300	1.0	150
BC846ALT1	1A	65	110	220	2.0	100
BC846BLT1	1B	65	200	450	2.0	100
BC817-16LT1	6A	45	100	250	100	200
BC817-25LT1	6B	45	160	400	100	200
BC817-40LT1	6C	45	250	600	100	200
BC847ALT1	1E	45	110	220	2.0	100
BC847BLT1	1F	45	200	450	2.0	100
BC847CLT1	1G	45	420	800	2.0	100
MMBT2222ALT1	1P	40	100	300	150	200
MMBT3904LT1	1AM	40	100	300	10	200
MMBT4401LT1	2X	40	100	300	150	250
BC848ALT1	1J	30	110	220	2.0	100
BC848BLT1	1K	30	200	450	2.0	100
BC848CLT1	1L	30	420	800	2.0	100
Case 318-07 — TO-236AB (SOT-23) — PNP						
MMBT8599LT1	2W	80	100	300	1.0	150
BC856ALT1	3A	65	125	250	2.0	100
BC856BLT1	3B	65	220	475	2.0	100
MMBT2907ALT1	2F	60	150	300	150	200
BC807-16LT1	5A	45	100	250	100	200
BC807-25LT1	5B	45	160	400	100	200
BC807-40LT1	5C	45	250	600	100	200
BC857ALT1	3E	45	125	250	2.0	100
BC857BLT1	3F	45	220	475	2.0	100
MMBT3906LT1	2A	40	100	300	10	250
MMBT4403LT1	2T	40	100	300	150	200
BC858ALT1	3J	30	125	250	2.0	100
BC858BLT1	3K	30	220	475	2.0	100
BC858CLT1	3L	30	420	800	2.0	100

Devices listed in bold, italic are Motorola preferred devices.

Small-Signal Bipolar Transistors — Plastic-Encapsulated Surface Mount Transistors (continued)

Table 1. Plastic-Encapsulated Surface Mount General-Purpose Transistors (continued)

Pinout: 1-Emitter, 2-Base, 3-Collector
Devices are listed in order of descending breakdown voltage.

Device	Marking	$V_{(BR)CEO}$	h_{FE} @ I_C Min	Max	mA	f_T MHz Min
Case 318D-03 — SC-59 — NPN						
MSD601-RT1	YR	25	210	340	2.0	150(1)
MSD601-ST1	YS	25	290	460	2.0	150(1)
MSD602-RT1	WR	25	120	240	150	200(1)
MSD1328-RT1	1DR	20	200	350	500	200(1)
Case 318D-03 — SC-59 — PNP						
MSB709-RT1	AR	25	210	340	2.0	100(1)
MSB709-ST1	AS	25	290	460	2.0	100(1)
MSB710-QT1	CQ	25	85	170	150	200(1)
MSB710-RT1	CR	25	120	240	150	200(1)

(1)Typical

Table 2. Plastic-Encapsulated Surface Mount Bias Resistor Transistors for General Purpose Applications

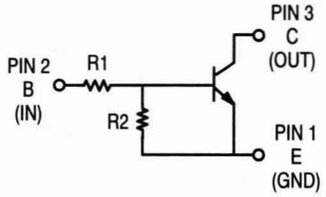

These devices include bias resistors on the semiconductor chip with the transistor.
See the BRT diagram for orientation of resistors.

Device NPN	Device PNP	Marking NPN	Marking PNP	$V_{(BR)CEO}$ Volts (Min)	h_{FE} @ I_C Min	mA	I_C mA Max	R_1 Ohm	R_2 Ohm
Case 318D-03 — SC-59									
MUN2211T1	***MUN2111T1***	8A	6A	50	35	5.0	100	10K	10K
MUN2212T1	***MUN2112T1***	8B	6B	50	60	5.0	100	22K	22K
MUN2213T1	***MUN2113T1***	8C	6C	50	80	5.0	100	47K	47K

Table 3. Plastic-Encapsulated Surface Mount Switching Transistors

The following tables are a listing of devices intended for high-speed, low saturation voltage, switching applications. These devices have very fast switching times and low output capacitance for optimized switching performance.

Pinout: 1-Base, 2-Emitter, 3-Collector

Device	Marking	Switching Time (ns) t_{on}	t_{off}	$V_{(BR)CEO}$	h_{FE} @ I_C Min	Max	mA	f_T MHz Min
Case 318-07 — TO-236AB (SOT-23) — NPN								
MMBT2369LT1	M1J	12	18	15	20	—	100	—
BSV52LT1	B2	12	18	12	40	120	10	400
Case 318-07 — TO-236AB (SOT-23) — PNP								
MMBT3640LT1	2J	25	35	12	20	—	50	500
Pinout: 1-Emitter, 2-Base, 3-Collector								
Case 318D-03 — SC-59 — NPN								
MSC1621T1	RB	20	40	20	40	180	1.0	200

Devices listed in bold, italic are Motorola preferred devices.

Table 4. Plastic-Encapsulated Surface Mount VHF/UHF Amplifiers, Mixers, Oscillators

The following table is a listing of devices intended for small-signal RF amplifier applications to VHF/UHF frequencies. These devices may also be used as VHF/UHF oscillators and mixers.

Pinout: 1-Base, 2-Emitter, 3-Collector

Device	Marking	$V_{(BR)CEO}$	C_{cb}(13) pF Max	f_T @ I_C GHz Min	mA
Case 318-07 — TO-236AB (SOT-23) — NPN					
MMBTH10LT1	3E	25	0.7	0.65	4.0
MMBT918LT1	3B	15	1.7(14)	0.6	4.0
MMBTH24LT1	3A	30	0.45	0.4	8.0
Case 318-07 — TO-236AB (SOT-23) — PNP					
MMBTH81LT1	3D	20	0.85	0.6	5.0
MMBTH69LT1	3J	15	0.35(13)	2.0	10

Pinout: 1-Emitter, 2-Base, 3-Collector

Device	Marking	$V_{(BR)CEO}$	C_{cb}(13) pF Max	f_T @ I_C GHz Min	mA
Case 318D-03 — SC-59 — NPN					
MSC2295-BT1	VB	20	1.5(13)	0.15	1.0
MSC2295-CT1	VC	20	1.5(13)	0.15	1.0
MSC2404-CT1	UC	20	1.0(13)	0.45	1.0
MSC3130T1	1S	10	—	1.4	5.0
Case 318D-03 — SC-59 — PNP					
MSA1022-BT1	EB	20	2.0(13)	0.15	1.0
MSA1022-CT1	EC	20	2.0(13)	0.15	1.0

(13) C_{re}
(14) C_{ob}

Table 5. Plastic-Encapsulated Surface Mount Choppers

The following table is a listing of small-signal devices intended for chopper applications where a higher than normal $V_{(BR)CEO}$ is required in the circuit application.

Pinout: 1-Base, 2-Emitter, 3-Collector

Device	Marking	$V_{(BR)CEO}$	$V_{CE(sat)}$	h_{FE} @ I_C Min	Max	mA
Case 318-07 — TO-236AB (SOT-23) — PNP						
MMBT404ALT1	2N	25	35	100	400	12

Devices listed in bold, italic are Motorola preferred devices.

Table 6. Plastic-Encapsulated Surface Mount Darlingtons

The following table is a listing of small-signal devices that have very high h_{FE} and input impedance characteristics. These devices utilize monolithic, cascade transistor construction.

Pinout: 1-Base, 2-Emitter, 3-Collector

Devices are listed in order of descending h_{FE}.

Device	Marking	$V_{(BR)CEO}$	$V_{CE(sat)}$ Volts Max	h_{FE} @ I_C Min	Max	mA
Case 318-07 — TO-236AB (SOT-23) — NPN						
MMBTA14LT1	1N	40	1.5	20K	—	100
MMBTA13LT1	1M	30	1.5	10K	—	100
Case 318-07 — TO-236AB (SOT-23) — PNP						
MMBTA64LT1	2V	30	1.5	20K	—	100

Table 7. Plastic-Encapsulated Surface Mount Low-Noise Transistors

The following table is a listing of small-signal devices intended for low noise applications in the audio range. These devices exhibit good linearity and are candidates for hi-fi and instrumentation equipment.

Pinout: 1-Base, 2-Emitter, 3-Collector

Devices are listed in order of ascending NF.

Device	Marking	NF dB Typ	$V_{(BR)CEO}$	h_{FE} @ I_C Min	Max	mA	f_T MHz Min
Case 318-07 — TO-236AB (SOT-23) — NPN							
MMBT5089LT1	1R	3.0(15)	30	400	—	10	50
MMBT2484LT1	1U	3.0(15)	60	—	800	10	50
MMBT6428LT1	1K	3.0	50	250	—	10	100
MMBT6429LT1	1L	3.0	45	500	—	10	100
Case 318-07 — TO-236AB (SOT-23) — PNP							
MMBT5087LT1	2Q	2.0(15)	50	250	—	10	40

(15)Max

Table 8. Plastic-Encapsulated Surface Mount High-Voltage Transistors

The following table is a listing of small-signal high-voltage devices designed for direct line operation requiring high voltage breakdown and relatively low current capability.

Pinout: 1-Base, 2-Emitter, 3-Collector

Devices are listed in order of descending breakdown voltage.

Device	Marking	$V_{(BR)CEO}$	h_{FE} @ I_C Min	Max	mA	f_T MHz Min
Case 318-07 — TO-236AB (SOT-23) — NPN						
MMBT6517LT1	1Z	350	15	—	100	40
MMBTA42LT1	1D	300	40	—	30	50
MMBT5551LT1	G1	160	30	—	50	100
Case 318-07 — TO-236AB (SOT-23) — PNP						
MMBT6520LT1	2Z	350	15	—	100	40
MMBTA92LT1	2D	300	25	—	30	50
MMBT5401LT1	2L	150	50	—	50	100

Devices listed in bold, italic are Motorola preferred devices.

Table 9. Plastic-Encapsulated Surface Mount Drivers

The following is a listing of small-signal devices intended for medium voltage driver applications at fairly high current levels.

Pinout: 1-Base, 2-Emitter, 3-Collector

Device	Marking	$V_{(BR)CEO}$	h_{FE} @ I_C Min	Max	mA	f_T MHz Min
Case 318-07 — TO-236AB (SOT-23) — NPN						
MMBTA06LT1	1G	80	50	—	100	100
BSS64LT1	AM	80	20	80	4.0	50
Case 318-07 — TO-236AB (SOT-23) — PNP						
BSS63LT1	BM	100	30	—	25	50
MMBTA56LT1	2G	80	50	—	100	50

Table 10. Plastic-Encapsulated Surface Mount RF Transistors

The following table is a listing of small-signal RF transistors intended for low-noise, high-power gain, Class A, AB or C amplifiers. These devices are used as pre-drivers in power amplifier applications.

Pinout: 1-Base, 2-Emitter, 3-Collector

		f_T @ I_C @ V_{CE}			NF @ I_C @ V_{CE}			MAG @ I_C @ V_{CE} @ f			
Device	Marking	GHz Typ	mA	V	dB Typ	mA	V	dB Typ	mA	V	MHz
Case 318-07 — TO-236AB (SOT-23) — NPN											
MMBR571LT1	7X	8.0	50	5.0	2.0	10	6.0	16.5	5.0	6.0	500
MMBR941LT1	7Y	8.0	15	6.0	2.1	5.0	6.0	8.5	5.0	6.0	2000
MMBR951LT1	7Z	8.0	30	8.0	2.1	5.0	6.0	7.5	5.0	6.0	2000
MMBR911LT1	7P	6.0	30	10	2.0	10	10	17	10	10	500
MMBR930LT1	7C	5.5	30	5.0	1.9	2.0	5.0	11	30	5.0	500
MMBR920LT1	7B	4.5	14	10	2.4	2.0	10	15	2.0	10	500
MMBR901LT1	7A	4.0	15	10	1.9	5.0	6.0	12	5.0	6.0	1000
BFR92LT1	P1	3.4	14	10	3.0	3.0	1.5	—	—	—	500
BFR93LT1	R1	3.4	30	5.0	2.5	2.0	5.0	—	—	—	30
MMBR931LT1	7D	3.0	1.0	1.0	4.3	0.25	1.0	10	0.25	1.0	1000
MMBR5179LT1	7H	1.4	5.0	6.0	4.5	1.5	6.0	15	5.0	6.0	200
MMBR2060LT1	7E	1.0	20	1.0	3.5	1.5	10	13	1.5	10	450
MMBR5031LT1	7G	1.0	5.0	6.0	2.5	1.0	6.0	17	1.0	6.0	450
MMBR2857LT1	7K	1.0	4.0	10	4.5	1.5	6.0	12.5	1.5	6.0	450
BFS17LT1	E1	1.0	2.0	5.0	5.0	2.0	5.0	—	—	—	30
Case 318-07 — TO-236AB (SOT-23) — PNP											
MMBR536LT1	7R	5.5	20	5.0	4.5	10	5.0	14	10	5.0	500
MMBR4957LT1	7F	1.2	2.0	10	3.0	2.0	10	17	2.0	10	450

Table 11. Plastic-Encapsulated Surface Mount Switching Transistors

Pinout: 1-Base, 2-Collector, 3-Emitter, 4-Collector

					h_{FE}		f_T	
Device	Marking	t_{on}	t_{off}	$V_{(BR)CEO}$	Min	Max	@ I_C (mA)	Min (MHz)
Case 318E-04 — SOT-223 — NPN								
PZT2222AT1	2222A	35	285	40	100	300	20	300
Case 318E-04 — SOT-223 — PNP								
PZT2907AT1	2907A	45	100	60	100	300	50	200

Devices listed in bold, italic are Motorola preferred devices.

Table 12. Plastic-Encapsulated Surface Mount Darlingtons

Pinout: 1-Base, 2-Collector, 3-Emitter, 4-Collector

Device	Marking	$V_{(BR)CEO}$	$V_{CE(sat)}$ Max (V)	h_{FE} Min	h_{FE} Max	@ I_C (mA)
Case 318E-04 — SOT-223 — PNP						
PZTA64T1	ZTA64	30	1.5	20k	—	100

Table 13. Plastic-Encapsulated Surface Mount High-Voltage Transistors

Pinout: 1-Base, 2-Collector, 3-Emitter, 4-Collector

Device	Marking	$V_{(BR)CEO}$	h_{FE} Min	h_{FE} Max	f_T @ I_C (mA)	f_T Min (MHz)
Case 318E-04 — SOT-223 — NPN						
PZTA42T1	TZA42	300	40	—	10	50
BF720T1	BF720	250	50	—	10	60
Case 318E-04 — SOT-223 — PNP						
PZTA92T1	TZA92	300	40	—	10	50
BF721T1	BF721	250	50	—	10	60
PZTA96T1	ZTA96	450	50	150	10	50
BSP16T1	BSP16	300	30	150	10	15

Devices listed in bold, italic are Motorola preferred devices.

Metal-Can Transistors

Metal-can packages are intended for use in industrial applications where harsh environmental conditions are encountered. These packages enhance reliability of the end products due to their resistance to varying humidity and extreme temperature ranges.

CASE 22-03
TO-206AA
(TO-18)
STYLE 1

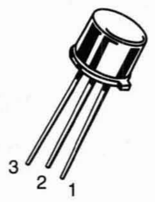

CASE 79-04
TO-205AD
(TO-39)
STYLE 1

Table 1. Metal-Can General-Purpose Transistors

These transistors are designed for DC to VHF amplifier applications, general-purpose switching applications, and complementary circuitry. Devices are listed in decreasing order of $V_{(BR)CEO}$ within each package group.

Device Type	$V_{(BR)CEO}$ Volts Min	f_T @ I_C MHz Min	mA	I_C mA Max	h_{FE} @ I_C Min	Max	mA
Case 22-03 — TO-206AA (TO-18) — NPN							
2N720A	80	50	50	150	40	120	150
2N3700	80	80	1.0	1000	50	—	500
BC107	45	150	10	200	110	450	2.0
BC107A	45	150	10	200	110	220	2.0
BC107B	45	150	10	200	200	450	2.0
BCY59-IX	45	125	10	200	250	460	2.0
BCY59-VIII	45	125	10	200	180	310	2.0
2N2222A	40	300	20	800	100	300	150
2N3947	40	300	10	300	100	300	10
BCY58-VIII	32	125	10	200	180	310	2.0
BC109C	25	150	10	100	420	800	2.0
Case 22-03 — TO-206AA (TO-18) — PNP							
2N2906A	60	200	50	600	40	120	150
2N2907A	60	200	50	600	100	300	150
2N3251A	60	300	10	200	100	300	10
BC177B	45	200	10	200	180	460	2.0
BCY79-IX	45	180	10	200	250	460	2.0
BCY79-VIII	45	180	10	200	180	310	2.0
Case 79-04 — TO-205AD (TO-39) — NPN							
2N3019	80	100	50	1000	100	300	150
2N3020	80	80	50	1000	40	120	150
2N1893	80	50	50	500	40	120	150
2N2219A	40	300	20	800	100	300	150
2N2218A	40	250	20	800	40	120	150
Case 79-04 — TO-205AD (TO-39) — PNP							
MM5007	100	30	50	2000	50	250	250
2N4033	80	150	50	1000	25	—	100
2N4036	65	60	50	1000	40	140	150
2N2904A	60	200	50	600	40	120	150
2N2905A	60	200	50	600	100	300	150
2N4030	60	100	50	1000	15	—	100
2N4032	60	150	50	1000	40	—	100
BSV16-10	60	50	50	1000	63	160	100

Devices listed in bold, italic are Motorola preferred devices.

Small-Signal Bipolar Transistors — Metal-Can Transistors (continued)

Table 2. Metal-Can High-Gain/Low-Noise Transistors

These transistors are characterized for high-gain and low-noise applications. Devices are listed in decreasing order of NF.

Device Type	NF Wideband dB Typ Max	$V_{(BR)CEO}$ Volts Min	I_C mA Max	h_{FE} @ I_C			f_T @ I_C	
				Min	Max	µA mA	MHz Min	mA
Case 22-03 — TO-206AA (TO-18) — NPN								
2N2484	8.0(1)	60	50	100	500	10	15	0.05
2N930A	3.0	45	30	100	300	10	45	0.5
2N930	3.0	45	30	100	300	10	30	0.5
Case 22-03 — TO-206AA (TO-18) — PNP								
2N3963	10	80	200	100	450	1.0(24)	40	0.5
2N3964	4.0	45	200	250	600	1.0(24)	50	0.5
2N3799	2.5	60	50	300	900	500	30	0.5

(1) Typical
(24) I_C = mA

Table 3. Metal-Can High-Voltage/High-Current Transistors

The following table lists Motorola standard devices that have high collector-emitter breakdown voltage. Devices are listed in decreasing order of $V_{(BR)CEO}$ within each package type.

Device Type	$V_{(BR)CEO}$ Volts Min	I_C mA Max	h_{FE} @ I_C		$V_{CE(sat)}$ @ I_C & I_B			f_T @ I_C	
			Min	mA	Volts Max	mA	mA	MHz Min	mA
Case 22-03 — TO-206AA (TO-18) — NPN									
2N6431	300	50	50	30	0.5	20	2.0	50	10
BSS73	300	500	40	30	0.5	50	5.0	100	20
Case 22-03 — TO-206AA (TO-18) — PNP									
2N6433	300	500	30	30	0.5	20	20	50	10
BSS76	300	500	35	30	0.5	50	5.0	100	20
2N3497	120	100	40	10	0.35	10	1.0	150	20
Case 79-04 — TO-205AD (TO-39) — NPN									
2N5058	300	150	35	30	1.0	30	3.0	30	10
BF259	300	100	25	30	1.0	30	6.0	110	30
2N4927	250	50	20	30	2.0	30	3.0	30	10
BF258	250	100	25	30	1.0	30	6.0	110	30
2N3500	150	300	40	150	0.4	150	15	150	20
2N3501	150	300	100	150	0.4	150	15	150	20
2N3499	100	500	100	150	0.6	300	30	150	20
MM3007	100	2500	50	250	0.35	150	15	50	50
Case 79-04 — TO-205AD (TO-39) — PNP									
2N4931	250	500	20	20	5.0	10	1.0	20	20
2N3636	175	1000	50	50	0.5	50	5.0	150	30
2N3637	175	1000	100	50	0.5	50	5.0	200	30
MM5007	100	2000	50	250	0.5	150	15	30	50

Devices listed in bold, italic are Motorola preferred devices.

Table 4. Metal-Can Switching Transistors

The following devices are intended for use in general-purpose switching and amplifier applications. Within each package group shown, the devices are listed in order of decreasing turn-on time (t_{on}).

Device Type	t_{on} & t_{off} @ I_C			$V_{(BR)CEO}$	I_C	h_{FE} @ I_C		$V_{CE(sat)}$ @ I_C @ I_B			f_T	I_C
	ns Max	ns Max	mA	Volts Min	mA Max	Min	mA	Volts Max	mA	mA	MHz Min	mA
Case 22-03 — TO-206AA (TO-18) — NPN												
2N4014	35	60	500	50	1000	35	500	0.52	500	50	300	50
2N2369A	12	18	10	15	200	40	10	0.2	10	1.0	500	10
BSX20	7.0	18	100	15	500	20	10	0.25	10	1.0	400	10
Case 22-03 — TO-206AA (TO-18) — PNP												
2N2894	60	90	30	12	200	40	30	0.2	30	3.0	400	30
2N869A	50	80	30	18	200	40	30	0.2	30	3.0	400	10
2N3546	40	30	50	12	—	25	50	0.25	50	5.0	700	10
MM4209	15	20	10	15	200	35	10	0.6	50	5.0	850	10
Case 79-04 — TO-205AD (TO-39) — NPN												
MM3725	35	60	500	40	2000	35	500	0.52	500	50	300	50
Case 79-04 — TO-205AD (TO-39) — PNP												
2N3467	40	90	500	40	100	40	500	0.5	500	50	175	50
2N3468	40	90	500	50	1000	25	500	0.6	500	50	150	50
2N3762	11.5	65	100	40	1500	30	1000	0.9	1000	100	180	50

Devices listed in bold, italic are Motorola preferred devices.

JFETs

JFETs operate in the depletion mode. They are available in both P- and N-channel and are offered in both Thruhole and Surface Mount packages. Applications include general-purpose amplifiers, switches and choppers, and RF amplifiers and mixers. These devices are economical and very rugged. The drain and source are interchangeable on many typical FETs.

CASE 29-04
TO-226AA
(TO-92)

Table 1. JFET Low-Frequency/Low-Noise

The following table is a listing of small-signal JFETs intended for low-noise applications in the audio range. These devices exhibit good linearity and are candidates for hi-fi and instrumentation equipment.

Device	$R_e \lvert Y_{fs} \rvert$ mmho Min	@ f MHz	$R_e \lvert Y_{os} \rvert$ µmho Max	@ f MHz	C_{iss} pF Max	C_{rss} pF Max	$V_{(BR)GSS}$ $V_{(BR)GDO}$ V Min	$V_{GS(off)}$ V Min	$V_{GS(off)}$ V Max	I_{DSS} mA Min	I_{DSS} mA Max	Style
Case 29-04 — TO-226AA (TO-92) — N-Channel												
J202	1.0	20	3.5[1]	20	5.0[1]	2.0[1]	40	0.8	4.0	0.9	4.5	5
2N5458	1.5	15	50	15	7.0	3.0	25	1.0	7.0	2.0	9.0	5
J203	1.5	20	10[1]	20	5.0[1]	2.0[1]	40	2.0	10	4.0	20	5
MPF3821	1.5	15	10	15	6.0	3.0	50	—	4.0	0.5	2.5	5
2N5457	2.0	15	50	15	7.0	3.0	25	0.5	6.0	1.0	5.0	5
2N5459	2.0	15	50	15	7.0	3.0	25	2.0	8.0	4.0	16	5
MPF3822	2.0	15	20	15	6.0	3.0	50	—	6.0	2.0	10	5
Case 29-04 — TO-226AA (TO-92) — P-Channel												
2N5460	1.0	0.001	50	0.001	7.0	2.0	40	0.75	6.0	1.0	5.0	7
2N5461	1.5	0.001	50	0.001	7.0	2.0	40	1.0	7.5	2.0	9.0	7
2N5462	2.0	0.001	50	0.001	7.0	2.0	40	1.8	9.0	4.0	16	7

(1)Typical

Table 2. JFET High-Frequency Amplifiers

The following is a listing of small-signal JFETs that are intended for hi-frequency applications. These are candidates for VHF/UHF oscillators, mixers and front-end amplifiers.

Device	$R_e \lvert Y_{fs} \rvert$ mmho Min	@ f MHz	$R_e \lvert Y_{os} \rvert$ µmho Max	@ f MHz	C_{iss} pF Max	C_{rss} pF Max	NF @ R_G = 1K dB Max	NF @ R_G = 1K f MHz	$V_{(BR)GSS}$ $V_{(BR)GDO}$ V Min	$V_{GS(off)}$ V Min	$V_{GS(off)}$ V Max	I_{DSS} mA Min	I_{DSS} mA Max	Style
Case 29-04 — TO-226AA (TO-92) — N-Channel														
2N5669	1.6	100	100	100	7.0	3.0	2.5	100	25	1.0	6.0	4.0	10	5
MPF102	1.6	100	200	100	7.0	3.0	—	—	25	—	8.0	2.0	20	5
2N5668	1.0	100	50	100	7.0	3.0	2.5	100	25	0.2	4.0	1.0	5.0	5
2N5484	2.5	100	75	100	5.0	1.0	3.0	100	25	0.3	3.0	1.0	5.0	5
2N5670	2.5	100	150	100	7.0	3.0	2.5	100	25	2.0	8.0	8.0	20	5
2N5485	3.0	400	100	400	5.0	1.0	4.0	400	25	1.0	4.0	4.0	10	5
J305	3.0[1]	400	80[1]	100	3.0[1]	0.8[1]	4.0[1]	400	30	0.5	3.0	1.0	8.0	5
2N5486	3.5	400	100	400	5.0	1.0	4.0	400	25	2.0	6.0	8.0	20	5
J300	4.5	0.001	200	0.001	5.5	1.1	—	—	25	—	1.0[16]	6.0	30	5
J304	4.2	400	80[1]	100	3.0[1]	0.8[1]	4.0[1]	400	30	2.0	6.0	5.0	15	5
J308	12[1]	100	250[1]	100	7.5	2.5	1.5[1]	100	25	1.0	6.5	12	60	5
J309	12[1]	100	250[1]	100	7.5	2.5	1.5[1]	100	25	1.0	4.0	12	30	5
J310	12[1]	100	250[1]	100	7.5	2.5	1.5[1]	100	25	2.0	6.5	24	60	5

(1)Typical
(16)$V_{GS(f)}$

Devices listed in bold, italic are Motorola preferred devices.

Table 3. JFET Switches and Choppers

The following is a listing of JFETs intended for switching and chopper applications.

Device	$R_{DS(on)}$ @ I_D Ω Max	µA	$V_{GS(off)}$ V Min	Max	I_{DSS} mA Min	Max	$V_{(BR)GSS}$ $V_{(BR)GDO}$ V Min	C_{iss} pF Max	C_{rss} pF Max	t_{on} ns Max	t_{off} ns Max	Style
Case 29-04 — TO-226AA (TO-92) — N-Channel												
MPF4856	25	—	4.0	10	50	—	40	10	8.0	9.0	25	5
MPF4859	25	—	4.0	10	50	—	30	18	8.0	9.0	25	5
2N5638	30	1.0	—	(12)	50	—	30	10	4.0	9.0	15	5
J111	30	1.0	3.0	10	20	—	35	10(1)	5.0(1)	13	35	5
MPF4857	40	—	2.0	6.0	20	100	40	18	8.0	10	50	5
MPF4860	40	—	2.0	6.0	20	100	30	18	8.0	10	50	5
J112	50	1.0	1.0	5.0	5.0	—	35	10(1)	5.0(1)	13(1)	35(1)	5
MPF4392	60	1.0	2.0	5.0	25	75	20	10	3.5	15	35	5
2N5639	60	1.0	—	(8.0)(1)	25	—	30	10	4.0	14	30	5
MPF4858	60	—	0.8	4.0	8.0	80	40	18	8.0	20	100	5
MPF4861	60	—	0.8	4.0	8.0	80	30	18	8.0	20	100	5
MPF4393	100	1.0	0.5	3.0	5.0	30	20	10	3.5	15	55	5
2N5640	100	1.0	—	(6.0)	5.0	—	30	10	4.0	18	45	5
J113	100	1.0	0.5	3.0	2.0	—	35	10(1)	5.0(1)	13(1)	35(1)	5
2N5555	150	—	—	1.0(16)	15	—	25	5.0	1.2	10	25	5
BF246	—	—	0.5	14	10	300	25	—	—	—	—	22
BF246A	35(1)	1.0	1.5	4.0	30	80	25	—	—	—	—	22
BF246B	50(1)	1.0	3.0	7.0	60	140	25	—	—	—	—	22
BF246C	65(1)	1.0	5.5	12	110	250	25	—	—	—	—	22
J109	12	—	2.0	6.0	40	—	25	—	—	—	—	5
J110	18	—	0.5	4.0	10	—	25	—	—	—	—	5
Case 29-04 — TO-226AA (TO-92) — P-Channel												
MPF970	100	1.0	5.0	12	15	100	30	12	5.0	8.0	25	5
MPF971	250	1.0	1.0	7.0	2.0	80	30	12	5.0	10	120	5
J174	85	—	5.0	10	2.0	100	30	—	—	—	—	30
J175	125	—	3.0	6.0	7.0	60	30	—	—	—	—	30
J176	250	—	1.0	4.0	2.0	25	30	—	—	—	—	30
J177	300	—	0.8	2.5	1.5	20	30	—	—	—	—	30

(1)Typical
(16)$V_{GS(f)}$

Devices listed in bold, italic are Motorola preferred devices.

TMOS

MOSFETs

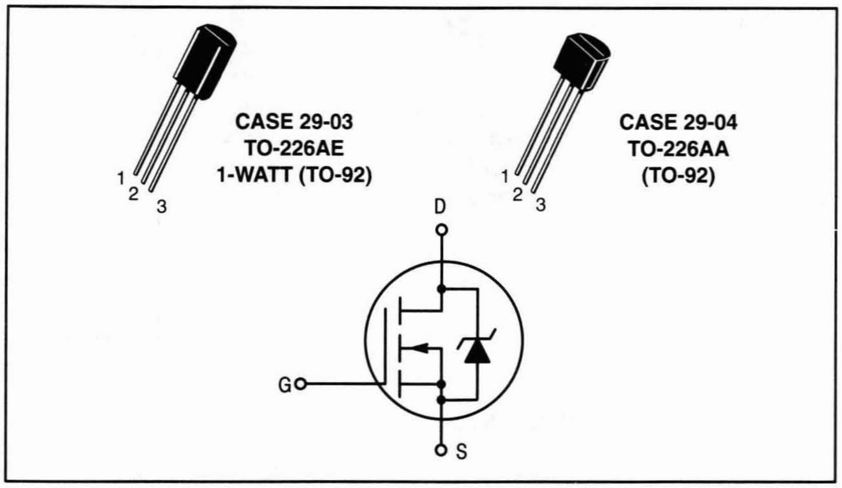

Table 1. TMOS Switches and Choppers

The following is a listing of small-signal TMOS devices that are intended for switching and chopper applications. These devices offer low $R_{DS(on)}$ characteristics.

Device	$R_{DS(on)}$ @ I_D Ω Max	A	$V_{GS(th)}$ V Min	Max	$V_{(BR)GSS}$ V Min	C_{iss} pF Max	C_{rss} pF Max	t_{on} ns Max	t_{off} ns Max	Style
Case 29-03 — TO-226AE (1-WATT TO-92) — N-Channel										
MPF930	1.4	1.0	1.0	3.5	35	70	18	15	15	22
MPF960	1.7	1.0	1.0	3.5	60	70	18	15	15	22
MPF6659	1.8	1.0	0.8	2.0	35	50	10	5.0	5.0	22
MPF990	2.0	1.0	1.0	3.5	90	70	18	15	15	22
MPF6660	3.0	1.0	0.8	2.0	60	50	10	5.0	5.0	22
MPF6661	4.0	1.0	0.8	2.0	90	50	10	5.0	5.0	22
MPF910	5.0	0.5	0.8	2.5	60	50	10	10	10	22
VN10LM	5.0	0.5	0.8	2.5	60	60	5.0	10	10	22
MPF89	6.4	0.25	1.0	2.7	200	90	3.5	15	15	7
Case 29-04 — TO-226AA (TO-92) — N-Channel										
VN0300L	1.2	1.0	0.8	2.5	30	100	25	30	30	22
2N7000	5.0	0.5	0.8	3.0	60	60	6.0	10	10	22
BS170	5.0	0.2	0.8	3.0	60	25(1)	3.0(1)	10	10	30
VN0610LL	5.0	0.5	0.8	2.5	60	60	5.0	10	10	22
VN1706L	6.0	0.5	0.8	2.0	170	120	20	8.0	18	22
VN2406L	6.0	0.5	0.8	2.0	240	125	20	8.0	23	22
BSS89	6.4	0.25	1.0	2.7	200	90	3.5	15	15	7
BS107A	6.4	0.25	1.0	3.0	200	70(1)	6.0(1)	15	15	30
2N7008	7.5	0.5	1.0	2.5	60	50	5.0	20	20	22
VN2222LL	7.5	0.5	0.6	2.5	60	60	5.0	10	10	22
VN2410L	10	0.5	0.8	2.0	240	125	20	8.0	23	22
BS107	14	0.2	1.0	3.0	200	70(1)	6.0(1)	15	15	30

(1)Typical

Devices listed in bold, italic are Motorola preferred devices.

Surface Mount FETs

This section contains the FET plastic packages available for surface mount applications. Most of these devices are the most popular metal-can and insertion type parts carried over to the new surface mount packages.

CASE 318-07
TO-236AB
SOT-23

CASE 318E-04
SOT-223

Table 1. JFET Surface Mount RF

The following is a list of surface mount FETs which are intended for VHF/UHF RF amplifier applications.

Pinout: 1-Drain, 2-Source, 3-Gate

		NF		Y_{fs} @ V_{DS}				
Device	**Marking**	**dB Typ**	**f MHz**	**mmhos Min**	**mmhos Max**	**V**	$V_{(BR)GSS}$	**Style**
Case 318-07 — TO-236AB (SOT-23) — N-Channel								
MMBFJ309LT1	6U	1.5	450	10	20	10	25	10
MMBFJ310LT1	6T	1.5	450	8.0	18	10	25	10
MMBFU310LT1	M6C	1.5	450	10	18	10	25	10
MMBF4416LT1	M6A	2(3)	100	4.5	7.5	15	30	10
MMBF5484LT1	M6B	2.0	100	3.0	6.0	15	25	10
MMBF5486LT1	6H	2.0	100	4.0	8.0	15	25	10

(3)Max

Table 2. JFET Surface Mount General-Purpose

The following table is a listing of surface mount small-signal general purpose FETs. These devices are intended for small-signal amplification for DC, audio, and lower RF frequencies. They also have applications as oscillators and general-purpose, low-voltage switches.

Pinout: 1-Drain, 2-Source, 3-Gate

			Y_{fs} @ V_{DS}			I_{DSS}		
Device	**Marking**	$V_{(BR)GSS}$	**mmhos Min**	**mmhos Max**	**V**	**mA Min**	**mA Max**	**Style**
Case 318-07 — TO-236AB (SOT-23) — N-Channel								
MMBF5457LT1	6D	25	1.0	5.0	15	1.0	5.0	10
MMBF5459LT1	6L	25	2.0	6.0	15	4.0	16	10
Case 318-07 — TO-236AB (SOT-23) — P-Channel								
MMBF5460LT1	M6E	40	1.0	4.0	15	1.0	5.0	10

Devices listed in bold, italic are Motorola preferred devices.

TMOS

Table 3. JFET Surface Mount Choppers/Switches

The following is a listing of small-signal surface mount JFET devices intended for switching and chopper applications.

Pinout: 1-Drain, 2-Source, 3-Gate

Device	Marking	$R_{DS(on)}$ Ohms Max	t_{off} ns Max	$V_{(BR)GSS}$	$V_{GS(off)}$ V Min	$V_{GS(off)}$ V Max	I_{DSS} mA Min	I_{DSS} mA Max	Style
Case 318-07 — TO-236AB (SOT-23) — N-Channel									
MMBF4856LT1	AAA	25	25	40	–4.0	–10	50	—	10
MMBF4391LT1	6J	30	20	30	–4.0	–10	50	150	10
MMBF4860LT1	6F	40	50	30	–2.0	–6.0	20	100	10
MMBF4392LT1	6K	60	35	30	–2.0	–5.0	25	75	10
MMBF4393LT1	6G	100	50	30	–0.5	–3.0	5.0	30	10
Case 318-07 — TO-236AB (SOT-23) — P-Channel									
MMBFJ175LT1	6W	125	30(t)	–30	3.0	6.0	–7.0	–60	10
MMBFJ177LT1	6Y	300	45(t)	–30	0.8	2.5	–1.5	–20	10

Table 4. TMOS FET Surface Mount

The following is a listing of small-signal surface mount TMOS FETs which exhibit low $R_{DS(on)}$ characteristics.

Pinout: 1-Gate, 2-Source, 3-Drain

Device	Marking	$R_{DS(on)}$ @ I_D Ohm	$R_{DS(on)}$ @ I_D mA	V_{DSS}	$V_{GS(th)}$ V Min	$V_{GS(th)}$ V Max	Switching Time t_{on} ns	Switching Time t_{off} ns	Style
Case 318-07 — TO-236AB (SOT-23) — N-Channel									
MMBF170LT1	6Z	5.0	200	60	0.8	3.0	10	10	21
BSS123LT1	SA	6.0	100	100	0.8	2.8	20	40	21
2N7002LT1	702	7.5	500	60	1.0	2.5	20	20	21

Pinout: 1-Gate, 2-Drain, 3-Source, 4-Drain

Device	Marking	$R_{DS(on)}$ Ohm	$R_{DS(on)}$ mA	V_{DSS}	$V_{GS(th)}$ Min (V)	$V_{GS(th)}$ Max (V)	Switching Time (ns) t_{on}	Switching Time (ns) t_{off}	Style
Case 318E-04 — SOT-223 — N-Channel									
MMFT107T1	FT107	14	200	200	1.0	3.0	15	15	3
MMFT960T1	FT960	1.7	1000	60	1.0	3.5	15	15	3
MMFT6661T1	T6661	4.0	1000	90	0.8	2.0	5.0	5.0	3

Devices listed in bold, italic are Motorola preferred devices.

Tuning Diodes — Abrupt Junction

Motorola supplies voltage-variable capacitance diodes serving the entire range of frequencies from HF through UHF. Used in RF receivers and transmitters, they have a variety of applications, including:

- Phase-locked loop tuning systems
- Local oscillator tuning
- Tuned RF preselectors
- RF filters
- RF phase shifters
- RF amplifiers
- Automatic frequency control
- Video filters and delay lines
- Harmonic generators
- FM modulators

Two families of devices are available: Abrupt Junction and Hyper Abrupt Junction. The Abrupt Junction family includes devices suitable for virtually all tuned-circuit and narrow-range tuning applications throughout the spectrum.

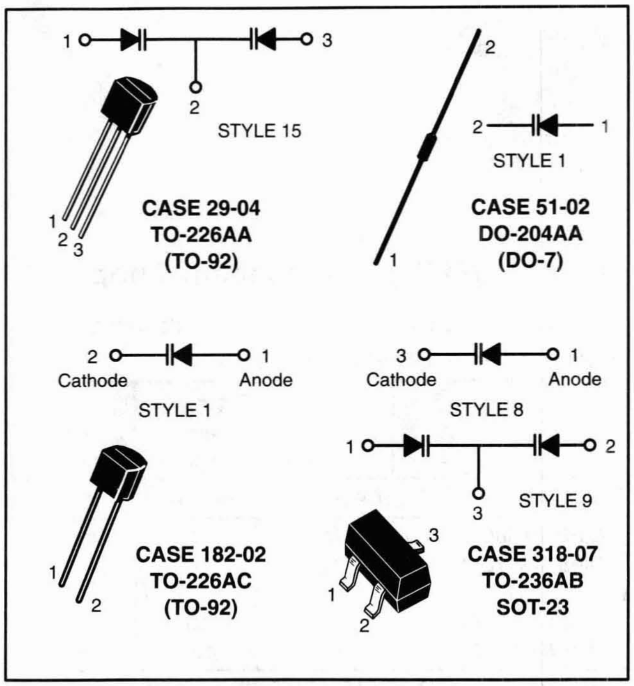

Typical Characteristics

Diode Capacitance versus Reverse Voltage

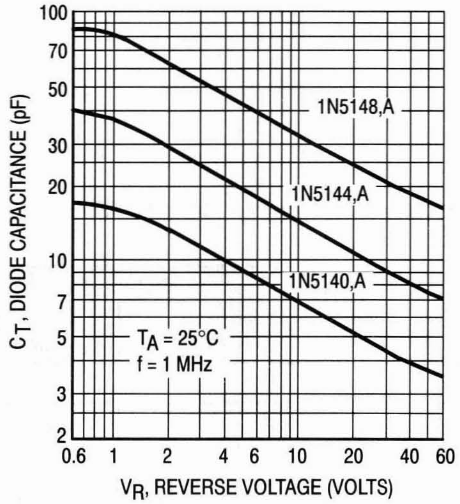

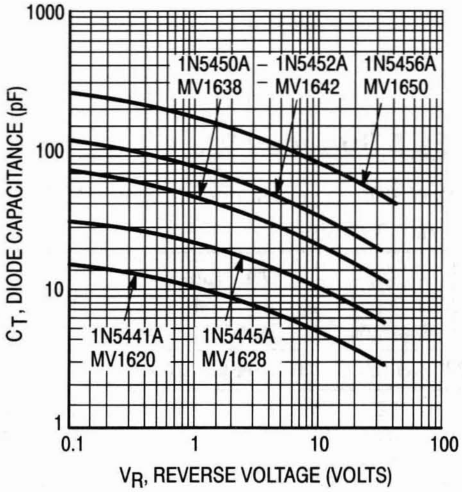

(See Tables 1 Thru 3)

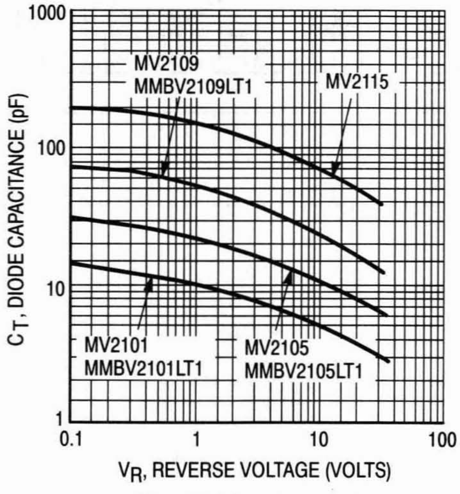

(See Tables 4 and 5)

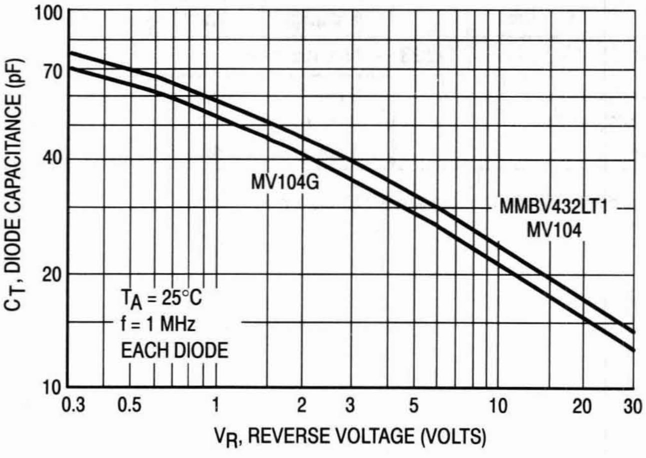

(See Table 6)

Small-Signal Tuning and Switching Diodes — Tuning Diodes/Abrupt Junction (continued)

Table 1. General-Purpose Glass Abrupt Tuning Diodes

High Q Capacitance Ratio @ 4.0 Volts/60 Volts

The following is a listing of axial leaded, general-purpose, abrupt tuning diodes. These devices exhibit high Q characteristics.

Device(19)	C_T @ V_R = 4.0 V, 1.0 MHz pF Min	pF Nominal	pF Max	$V_{(BR)R}$ Volts	Cap Ratio C4/C60 Min	Q 4.0 V, 50 MHz Min
Case 51-02 — DO-204AA (DO-7)						
1N5139	6.1	6.8	7.5	60	2.7	350
1N5140	9.0	10	11	60	2.8	300
1N5141	10.8	12	13.2	60	2.8	300
1N5142	13.5	15	16.5	60	2.8	250
1N5143	16.2	18	19.8	60	2.8	250
1N5144	19.8	22	24.2	60	3.2	200
1N5145	24.3	27	29.7	60	3.2	200
1N5146	29.7	33	36.3	60	3.2	200
1N5147	35.1	39	42.9	60	3.2	200
1N5148	42.3	47	51.7	60	3.2	200

(19)Suffix A = 5.0%

Table 2. General-Purpose Glass Abrupt Tuning Diodes

High Q Capacitance Ratio @ 2.0 Volts/30 Volts

The following is a listing of axial leaded, general-purpose, abrupt tuning diodes. These devices exhibit very high Q characteristics.

Device(20)	C_T @ V_R = 4.0 V, 1.0 MHz pF Min	pF Nominal	pF Max	$V_{R(BR)R}$ Volts	Cap Ratio C2/C30 Min	Q 4.0 V, 50 MHz Min
Case 51-02 — DO-204AA (DO-7)						
1N5441A	6.1	6.8	7.5	30	2.5	450
1N5443A	9.0	10	11	30	2.6	400
1N5444A	10.8	12	13.2	30	2.6	400
1N5445A	13.5	15	16.5	30	2.6	400
1N5446A	16.2	18	19.8	30	2.6	350
1N5448A	19.8	22	24.2	30	2.6	350
1N5449A	24.3	27	29.7	30	2.6	350
1N5450A	29.7	33	36.3	30	2.6	350
1N5451A	35.1	39	42.9	30	2.6	300
1N5452A	42.3	47	51.7	30	2.6	250
1N5453A	50.4	56	61.6	30	2.6	200
1N5455A	73.8	82	90.2	30	2.7	175
1N5456A	90	100	110	30	2.7	175

(20)Suffix B = 5.0%

Table 3. General-Purpose Glass Abrupt Tuning Diodes

Capacitance Ratio @ 2.0 Volts/20 Volts

The following is a listing of axial leaded, general-purpose, abrupt tuning diodes. These devices exhibit high Q characteristics.

Device	C_T @ V_R = 4.0 V, 1.0 MHz pF Min	pF Nominal	pF Max	$V_{(BR)R}$ Volts	Cap Ratio C2/C20 Min	Q 4.0 V, 50 MHz Typ
Case 51-02 — DO-204AA (DO-7)						
MV1620	6.1	6.8	7.5	20	2.0	300
MV1624	9.0	10	11	20	2.0	300
MV1626	10.8	12	13.2	20	2.0	300
MV1628	13.5	15	16.5	20	2.0	250
MV1630	16.2	18	19.8	20	2.0	250
NV1634	19.8	22	24.2	20	2.0	250
MV1636	24.3	27	29.7	20	2.0	200
MV1638	29.7	33	36.3	20	2.0	200
MV1640	35.1	39	42.9	20	2.0	200
MV1642	42.3	47	51.7	20	2.0	200
MV1644	50.4	56	61.6	20	2.0	150
MV1648	73.8	82	90.2	20	2.0	150
MV1650	90	100	110	20	2.0	150

Table 4. General-Purpose Plastic Abrupt Tuning Diodes

Capacitance Ratio @ 2.0 Volts/30 Volts

The following is a listing of plastic package, general-purpose, abrupt tuning diodes. These devices exhibit high Q characteristics.

Device	C_T @ V_R = 4.0 V, 1.0 MHz pF Min	pF Nominal	pF Max	$V_{R(BR)R}$ Volts	Cap Ratio C4/C30 Min	Q 4.0 V, 50 MHz Typ
Case 182-02 — TO-226AC (TO-92) — 2-Lead						
MV2101	6.1	6.8	7.5	30	2.5	400
MV2103	9.0	10	11	30	2.5	350
MV2104	10.8	12	13.2	30	2.5	350
MV2105	13.5	15	16.5	30	2.5	350
MV2107	19.8	22	24.2	30	2.5	300
MV2108	24.3	27	29.7	30	2.5	250
MV2109	29.7	33	36.3	30	2.5	200
MV2111	42.3	47	51.7	30	2.5	150
MV2113	61.2	68	74.8	30	2.5	150
MV2114	73.8	82	90.2	30	2.5	100
MV2115	90	100	110	30	2.6	100

Devices listed in bold, italic are Motorola preferred devices.

Small-Signal Tuning and Switching Diodes — Tuning Diodes/Abrupt Junction (continued)

Table 5. Surface Mount Abrupt Tuning Diodes
Capacitance Ratio @ 2.0 Volts/30 Volts

The following is a listing of surface mount abrupt junction tuning diodes intended for general-purpose variable capacitance circuit applications.

Device	C_T @ V_R = 4.0 V, 1.0 MHz pF Min	pF Nominal	pF Max	$V_{R(BR)R}$ Volts	Cap Ratio C2/C30 Min	Q 4.0 V, 50 MHz Typ
Case 318-07 — DO-236AB (SOT-23)						
MMBV2101LT1	6.1	6.8	7.5	30	2.5	400
MMBV2103LT1	9.0	10	11	30	2.5	350
MMBV2104LT1	10.8	12	13.2	30	2.5	350
MMBV2105LT1	13.5	15	16.5	30	2.5	350
MMBV2107LT1	19.8	22	24.2	30	2.5	300
MMBV2108LT1	24.3	27	29.7	30	2.5	250
MMBV2109LT1	29.7	33	36.3	30	2.5	200

Table 6. Abrupt Tuning Diodes for FM Radio — Dual

The following is a listing of abrupt tuning diodes that are available as dual units in a single package.

Device	C_T @ V_R(22) pF Min	pF Max	Volts	Cap Ratio C3/C30 Min	Q 3.0 V, 50 MHz Min	$V_{(BR)R}$ Volts	Device Marking	Style
Case 29-04 — TO-226AA (TO-92)								
MV104	37	42	3.0	2.5	100	32	—	15
Case 318-07 — TO-236AB (SOT-23)								
MMBV432LT1	43	48.1	2.0	1.5(21)	100	14	M4B	9

(21)C2/C8
(22)Each Diode

Devices listed in bold, italic are Motorola preferred devices.

Tuning Diodes — Hyper-Abrupt Junction

The Hyper Abrupt family exibits higher capacitance, and a much larger capacitance ratio. It is particularly well suited for wider-range applications such as AM/FM radio and TV tuning.

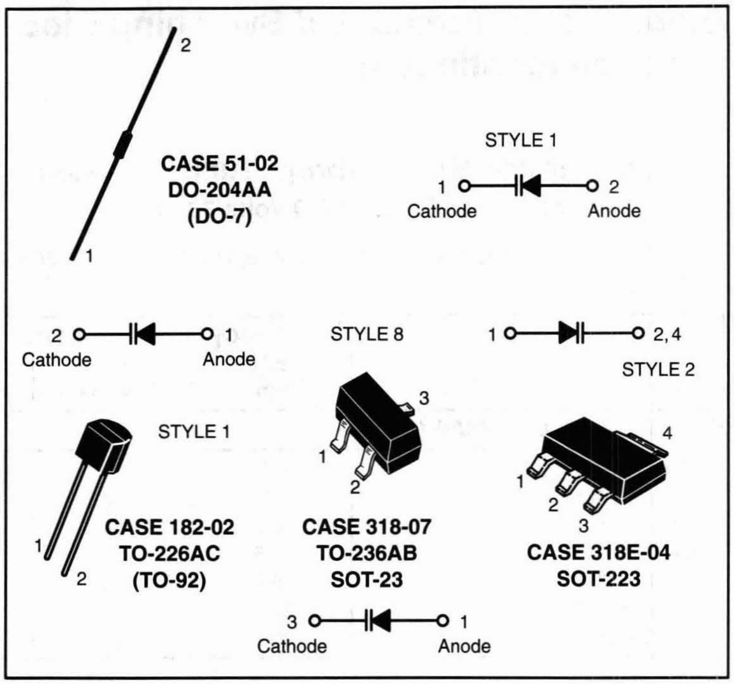

Typical Characteristics

Diode Capacitance versus Reverse Voltage

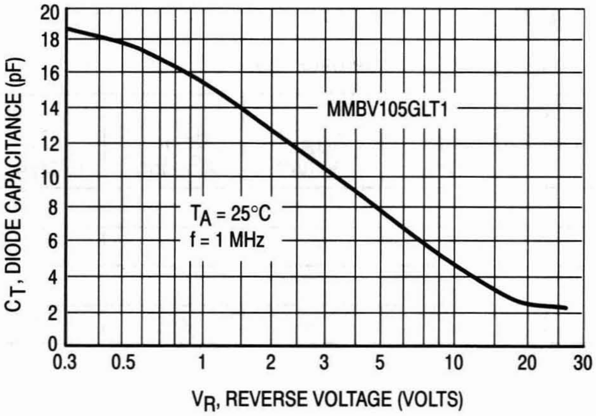

Figure 1. Diode Capacitance

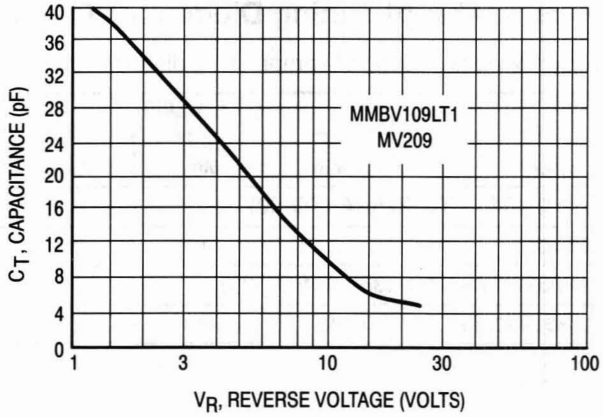

Figure 2. Diode Capacitance

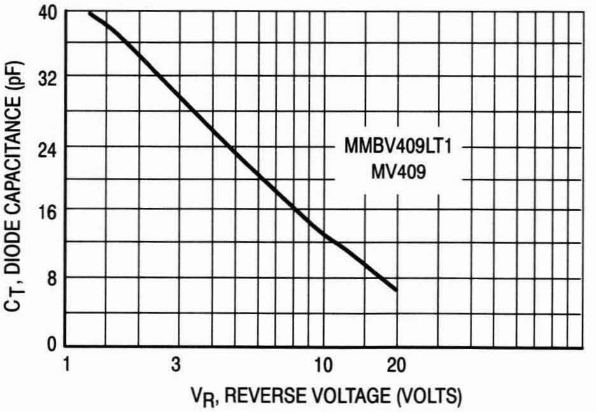

Figure 3. Diode Capacitance

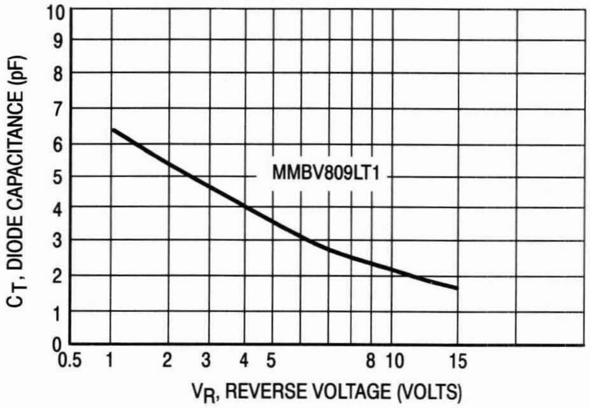

Figure 4. Diode Capacitance

Small-Signal Tuning and Switching Diodes — Tuning Diodes/Hyper-Abrupt Junction (continued)

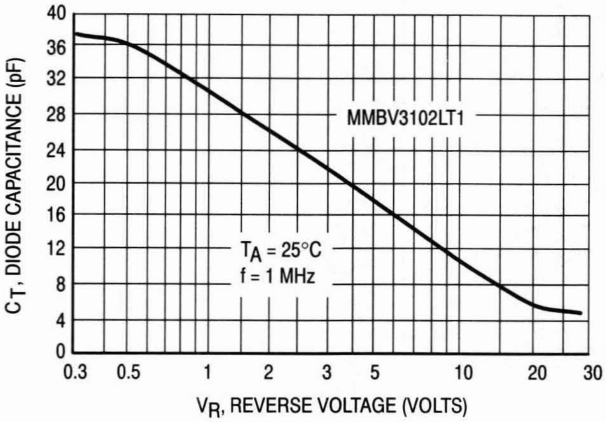

Figure 5. Diode Capacitance

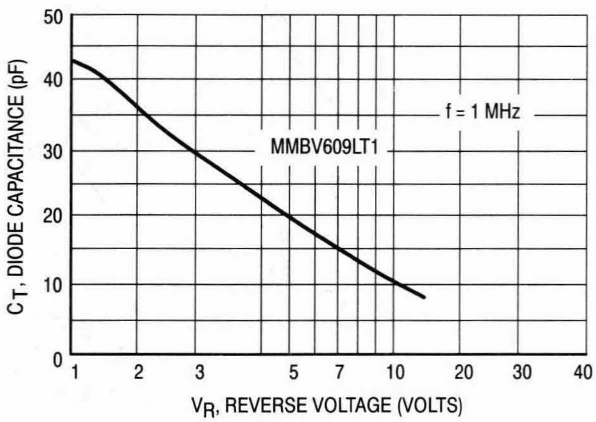

Figure 6. Diode Capacitance Each Die

MVAM108

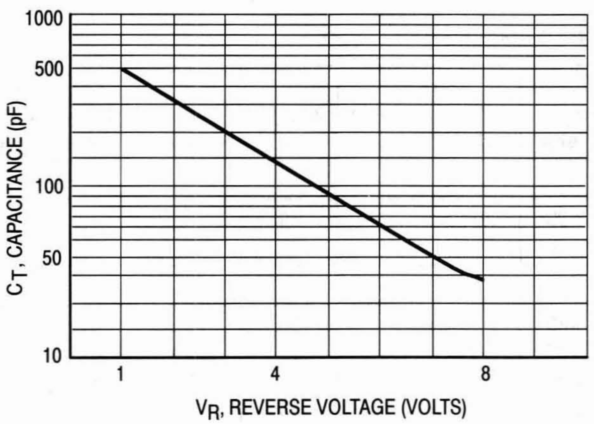

Figure 7. Capacitance versus Reverse Voltage

MVAM109/MV7005T1

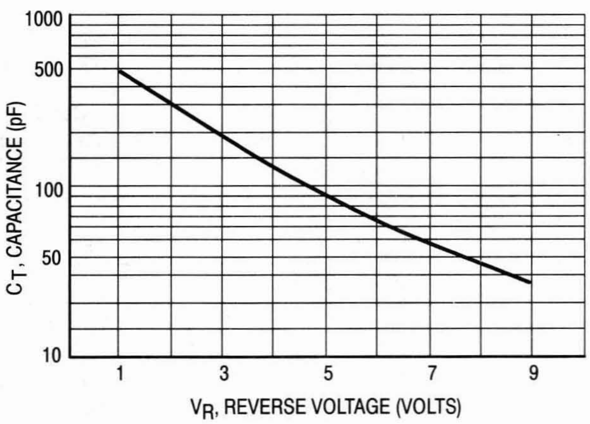

Figure 8. Capacitance versus Reverse Voltage

MVAM115

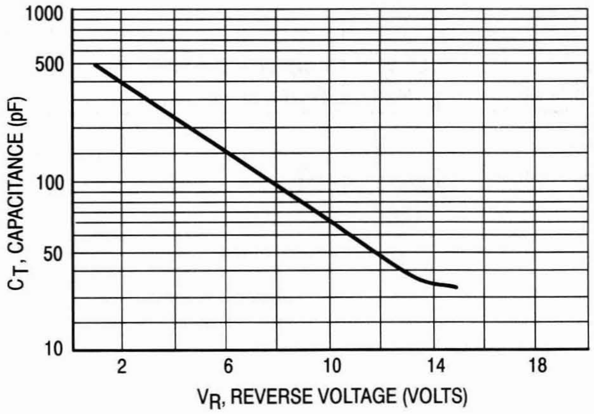

Figure 9. Capacitance versus Reverse Voltage

MVAM125

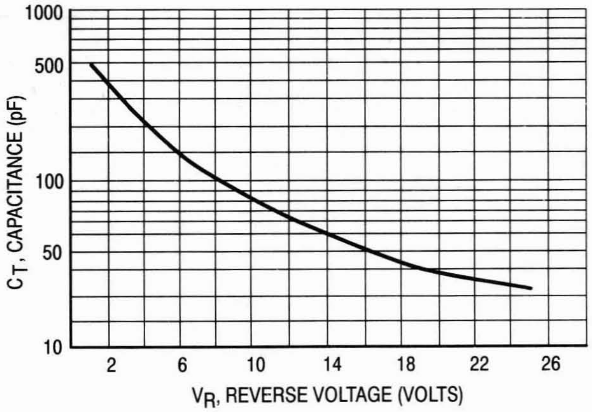

Figure 10. Capacitance versus Reverse Voltage

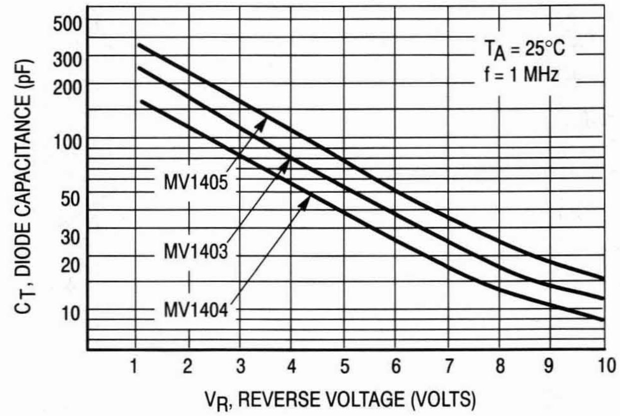

Figure 11. Diode Capacitance versus Reverse Voltage

Table 1. Hyper-Abrupt Tuning Diodes for Telecommunications — Single

The following is a listing of hyper-abrupt tuning diodes intended for high frequency, FM radio, and TV tuner applications.

Device	C_T @ V_R (f = 1.0 MHz) pF Min	pF Max	Volts	Cap Ratio @ V_R Min	Max	Volts	Q 3.0 V Min	50 MHz Max	$V_{(BR)R}$ Volts	Device Marking	Case Style	CV Curve Fig
Case 182-02 — TO-226AC (TO-92)												
MV209	26	32	3.0	5.0	6.5	3/25	200	—	30	—	1	2
MV409	26	32	3.0	1.5	2.0	3/8	200	—	20	—	1	3
Case 318-07 — TO-236AB (SOT-23)												
MMBV105GLT1	1.8	2.8	25	4.0	6.0	3/25	200	—	30	M4E	8	1
MMBV109LT1	26	32	3.0	5.0	6.5	3/25	200	—	30	M4A	8	2
MMBV409LT1	26	32	3.0	1.5	2.0	3/8	200	—	20	X5	8	3
MMBV809LT1	4.5	6.1	2.0	1.8	2.6	2/8	300	—	20	5K	8	4
MMBV3102LT1	20	25	3.0	4.5	—	3/25	200	—	30	M4C	8	5

Table 2. Hyper-Abrupt Tuning Diodes for Communications — Dual

Device	C_T @ V_R (f = 1.0 MHz) pF Min	pF Max	Volts	Cap Ratio @ V_R Min	Max	Volts	Q 3.0 V Min	50 MHz Max	$V_{(BR)R}$ Volts	Device Marking	Case Style	CV Curve Fig
Case 318-07 — TO-236AB (SOT-23)												
MMBV609LT1	26	32	3.0	1.8	2.4	3/8	250	—	20	5L	9	6

Devices listed in bold, italic are Motorola preferred devices.

Small-Signal Tuning and Switching Diodes — Tuning Diodes/Hyper-Abrupt Junction (continued)

Table 3. Hyper-Abrupt Tuning Diodes for Low Frequency Applications — Single

The following is a listing of AM, hyper-abrupt tuning diodes that have a large capacity range and are designed for low frequency circuit applications.

Device	C_T @ 1.0 MHz pF Min	pF Max	Volts	Cap Ratio @ V_R Min	Volts	$V_{(BR)R}$ Volts	Style	CV Curve Figure
Case 182-02 — TO-226AC (TO-92)								
MVAM108	440	560	1.0	15	1.0/8.0	12	1	7
MVAM109	400	520	1.0	12	1.0/9.0	15	1	8
MVAM115	440	560	1.0	15	1.0/15	18	1	9
MVAM125	440	560	1.0	15	1.0/25	28	1	10

Table 4. Hyper-Abrupt High Capacitance Voltage Variable Diode — Surface Mount

The following is a high capacitance voltage variable diode intended for low frequency applications and circuits requiring large tuning capacitance.

Device	$V_{(BR)R}$ Volts	I_R nA	C_T Diode Capacitance Min pF	Max pF	Cap Ratio Min	Q Min	Style	CV Curve Figure
Case 318E-04 — SOT-223								
Pinout: 1-Anode, 2, 4-Cathode, 3-NC								
MV7005T1	15	100	400	520	12	150	2	8

Table 5. Hyper-Abrupt High Capacitance Tuning Diodes — Axial Lead Glass Package

Device	C_T @ V_R pF Min	pF Max	Volts	Cap Ratio C2/C10 Min	Q 2.0 V, 1.0 MHz Min	$V_{(BR)R}$ Volts	Style	CV Curve Figure
Case 51-02 — DO-204AA (DO-7)								
MV1404	96	144	2.0	10	200	12	1	11
MV1403	140	210	2.0	10	200	12	1	11
MV1405	200	300	2.0	10	200	12	1	11

Devices listed in bold, italic are Motorola preferred devices.

Hot-Carrier (Schottky) Diodes

Hot-Carrier diodes are ideal for VHF and UHF mixer and detector applications as well as many higher frequency applications. They provide stable electrical characteristics by eliminating the point-contact diode presently used in many applications.

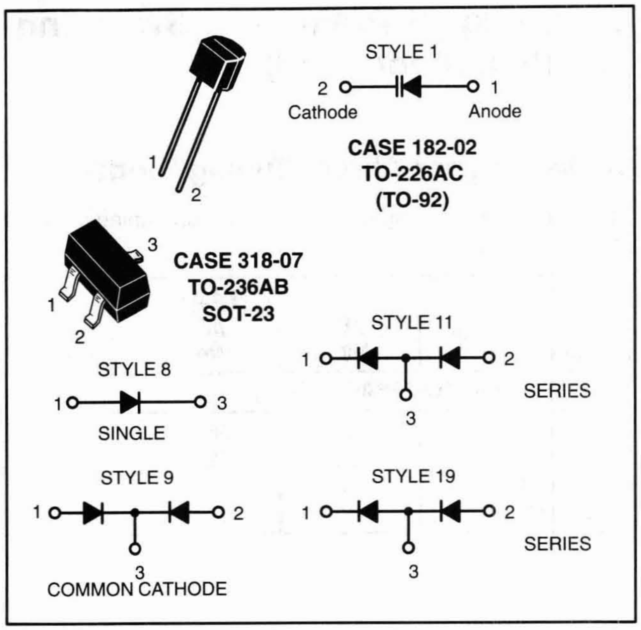

Typical Characteristics

Capacitance versus Reverse Voltage

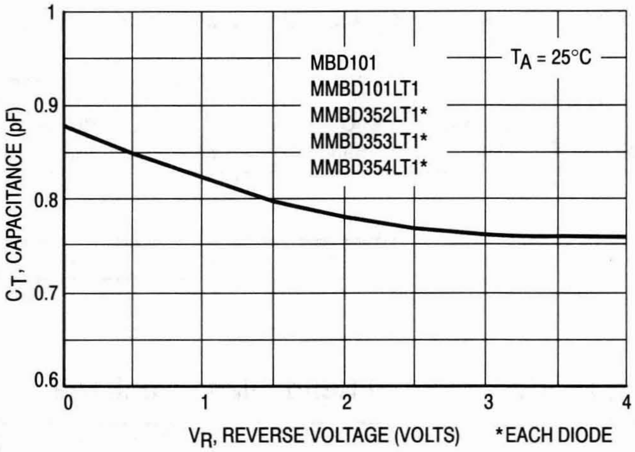

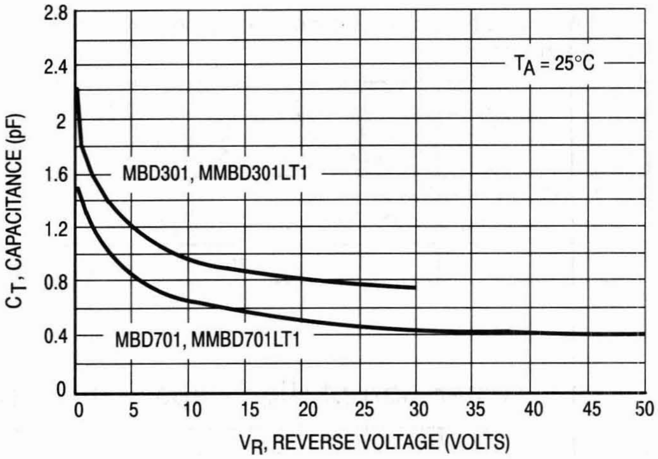

(See Table 1)

Table 1. Hot-Carrier (Schottky) Diodes

The following is a listing of hot carrier (Schottky) diodes that exhibit low forward voltage drop for improved circuit efficiency.

Device	$V_{(BR)R}$ Volts	C_T @ V_R pF Max	V_F @ 10 mA Volts Max	I_R @ V_R nA Max	Minority Lifetime pS	Device Marking	Style
Case 182-02 — TO-226AC (TO-92)							
MBD701	70	1.0 @ 20 V	1.2	200 @ 35 V	15	—	1
MBD301	30	1.5 @ 15 V	0.6	200 @ 25 V	15	—	1
MBD101	4.0	1.0 @ 0 V	0.6	250 @ 3.0 V	—	—	1
Case 318-07 — TO-236AB (SOT-23)							
MMBD701LT1	70	1.0 @ 20 V	1.2	200 @ 35 V	15	5H	8
MMBD301LT1	30	1.5 @ 15 V	0.6	200 @ 25 V	15	4T	8
MMBD101LT1	4.0	1.0 @ 0 V	0.6	250 @ 3.0 V	—	4M	8
MMBD352LT1(23)	4.0	1.0 @ 0 V	0.6	250 @ 3.0 V	—	M5G	11
MMBD353LT1(23)	4.0	1.0 @ 0 V	0.6	250 @ 3.0 V	—	M4F	19
MMBD354LT1(23)	4.0	1.0 @ 0 V	0.6	250 @ 3.0 V	—	M6H	9

(23)Dual Diodes

Devices listed in bold, italic are Motorola preferred devices.

Switching Diodes

Small-signal switching diodes are intended for low current switching and steering applications. Hot-Carrier, PIN and general-purpose diodes allow a wide selection for specific application requirements.

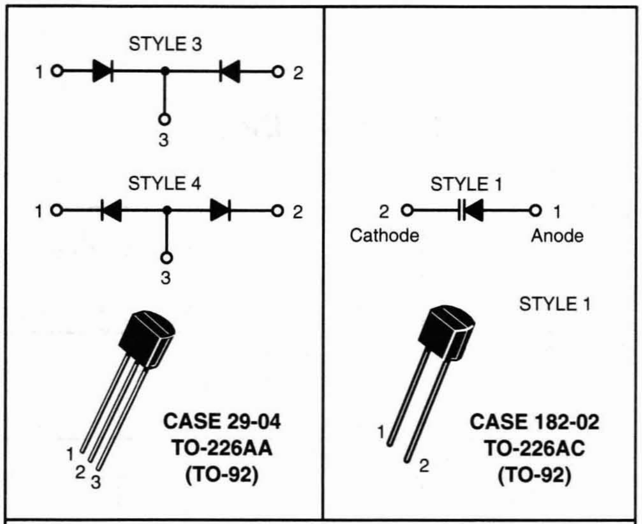

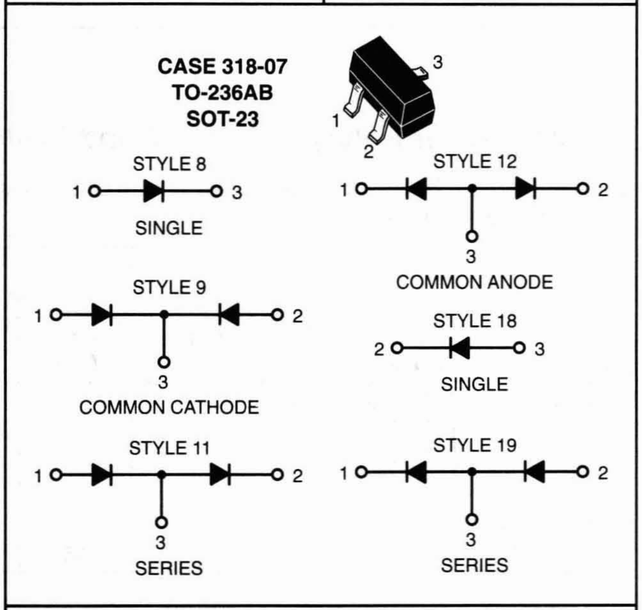

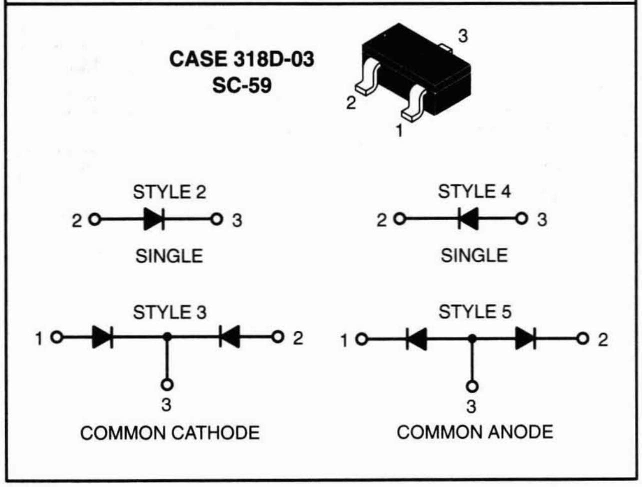

Typical Characteristics

Capacitance versus Reverse Voltage

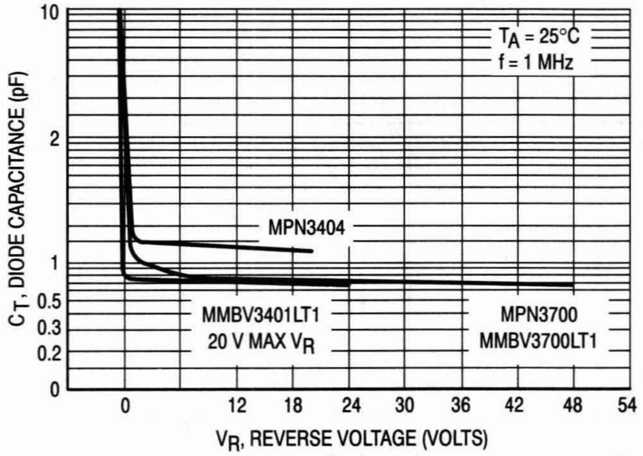

(See Table 1)

Table 1. PIN Switching Diodes

The following PIN diodes are designed for VHF band switching and general-purpose low current switching applications.

Device	$V_{(BR)R}$ Volts Min	C_T @ V_R @ 1.0 MHz pF Max	Volts	I_R @ V_R nA Max	Series Resistance Ohm Max	Device Marking	Style
Case 182-02 — TO-226AC (TO-92)							
MPN3700	200	1.0	20	0.1 @ 150	1.0 @ 10 mA	—	1
MPN3404	20	2.0	15	0.1 @ 25 V	0.85 @ 10 mA	—	1
Case 318-07 — TO-236AB (SOT-23)							
MMBV3700LT1	200	1.0	20	0.1 @ 150	1.0 @ 10 mA	4R	8
MMBV3401LT1	35	1.0	20	0.1 @ 25 V	0.7 @ 10 mA	4D	8

Table 2. General-Purpose Signal and Switching Diodes — Single

The following is a listing of small-signal switching diodes in surface mount packages. These diodes are intended for low current switching and signal steering applications.

Device	Marking	$V_{(BR)R}$ Min (V)	$V_{(BR)R}$ @ I_{BR} (μA)	I_R Max (μA)	I_R @ V_R (V)	V_F Min (V)	V_F Max (V)	V_F @ I_F (mA)	C_T Max (pF)	t_{rr} Max (ns)	Pin Out Case Style
Case 318-07 — TO-236AB (SOT-23)											
BAS21LT1	A82	250	100	0.1	200		1.0	100	5.0	50	8
MMBD914LT1	5D	100	100	5.0	75		1.0	10	4.0	4.0	8
BAS16LT1	A6	75	100	1.0	75		1.0	50	2.0	6.0	8
MMBD6050LT1	5A	70	100	0.1	50	0.85	1.1	100	2.5	4.0	8
BAL99LT1	JF	70	100	2.5	70		1.0	50	1.5	6.0	18

Device	Marking	$V_{(BR)R}$ Min (V)	$V_{(BR)R}$ @ I_{BR} (μA)	I_R Max (μA)	I_R @ V_R (V)	V_F Min (V)	V_F Max (V)	V_F @ I_R (mA)	C_J Max (pF)	t_{rr} Max (μs)	Case Style
Case 318D-03 — SC-59											
M1MA151AT1	MA	40	100	0.1	35	—	1.2	100	2.0	3.0	4
M1MA151KT1	MH	40	100	0.1	35	—	1.2	100	2.0	3.0	2

Devices listed in bold, italic are Motorola preferred devices.

Table 3. General-Purpose Signal and Switching Diodes — Dual

The following is a listing of small-signal switching diodes in surface mount packages. These diodes are intended for low current switching and signal steering applications.

		$V_{(BR)R}$		I_R		V_F			C_T	t_{rr}	Pin Out
Device	Marking	Min (V)	@ I_{BR} (μA)	Max (μA)	@ V_R (V)	Min (V)	Max (V)	@ I_F (mA)	Max (pF)	Max (ns)	Case Style
Case 318-07 — TO-236AB (SOT-23)											
MMBD7000LT1	M5C	100	100	0.3	50	0.75	1.1	100	1.5	4.0	11
MMBD2836LT1	A2	75	100	0.1	50		1.0	10	4.0	4.0	12
MMBD2838LT1	A6	75	100	0.1	50		1.0	10	4.0	4.0	9
BAV70LT1	A4	70	100	5.0	70		1.0	50	1.5	6.0	9
BAV99LT1	A7	70	100	2.5	70		1.0	50	1.5	4.0	11
BAW56LT1	A1	70	100	2.5	70		1.0	50	2.0	6.0	12
MMBD6100LT1	5BM	70	100	0.1	50	0.85	1.1	100	2.5	4.0	9
BAV74LT1	JA	50	5.0	0.1	50		1.0	100	2.0	4.0	9
MMBD2835LT1	A3	35	100	0.1	30		1.0	10	4.0	4.0	12
MMBD2837LT1	A5	35	100	0.1	30		1.0	10	4.0	4.0	9
Case 318D-03 — SC-59											
M1MA151WAT1	MN	40	100	0.1	35	—	1.2	100	15	10	5
M1MA151WKT1	MT	40	100	0.1	35	—	1.2	100	2.0	3.0	3

Devices listed in bold, italic are Motorola preferred devices.

Multiple Switching Diodes

Multiple diode configurations utilize monolithic structures fabricated by the planar process. They are designed to satisfy fast switching requirements as in core driver and encoding/decoding applications where their monolithic configurations offer lower cost, higher reliability and space savings.

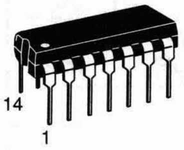

CASE 646-06
PIN DIP
PLASTIC

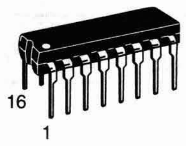

CASE 648-08
PIN DIP
PLASTIC

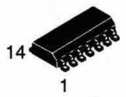

CASE 751A-02
SO-14
PLASTIC

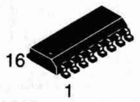

CASE 751B-03
SO-16
PLASTIC

Diode Array Diagrams

1

Dual 10 Diode Array

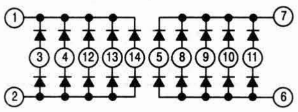

2

Dual 10 Diode Array

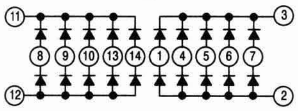

3

16 Diode Array

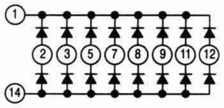

NC Pin 4,6,10,13

4

16 Diode Array

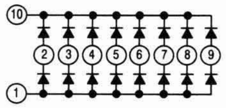

5

8 Diode Array (Common Cathode)

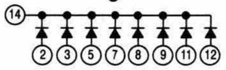

NC Pin 1, 4, 6, 10, 13

6

8 Diode Array (Common Cathode)

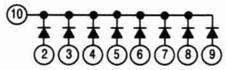

NC Pin 1

7

8 Diode Array (Common Anode)

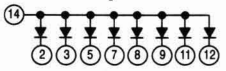

NC Pin 1, 4, 6, 10, 13

8

8 Diode Array (Common Anode)

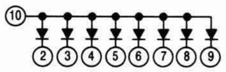

NC Pin 1

9

Dual 8 Diode Array

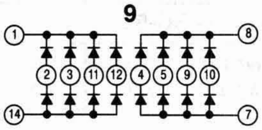

NC Pin 6, 13

10

Isolated 8 Diode Array

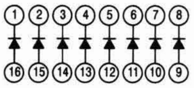

11

Isolated 7 Diode Array

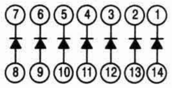

12

7 Diode Array (Common Cathode)

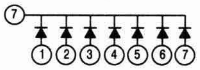

Multiple Switching Diodes (continued)

Table 1. Diode Arrays

Case 646-06 — TO-116

Device	Function	Pin Connections Diagram No.
MAD130P	Dual 10 Diode Array	1
MAD1103P	16 Diode Array	3
MAD1105P	8 Diode Common Cathode Array	5
MAD1107P	Dual 8 Diode Array	9
MAD1109P	7 Isolated Diode Array	11

Case 648-08

MAD1108P	8 Isolated Diode Array	10

Case 751A-02 — SO-14

MMAD130	Dual 10 Diode Array	2
MMAD1103	16 Diode Array	3
MMAD1105	8 Diode Common Cathode Array	5
MMAD1106	8 Diode Common Anode Array	7
MMAD1107	Dual 8 Diode Array	9
MMAD1109	7 Isolated Diode Array	11

Case 751B-03 — SO-16

MMAD1108	8 Isolated Diode Array	10

Devices listed in bold, italic are Motorola preferred devices.

TVS/ZENERS
Transient Voltage Suppressors/ Zener Regulator and Reference Diodes

In Brief . . .

Motorola's standard TVS (Transient Voltage Suppressors) and Zener diodes comprise the largest inventoried line in the industry. Continuous development of improved manufacturing techniques have resulted in computerized diffusion and test, as well as critical process controls learned from surface-sensitive MOS fabrication. Resultant high yields lower factory costs. Check the following features for application to your specific requirements:

- Wide selection of package materials and styles:
  - Plastic (Surmetic) for low cost, mechanical ruggedness
  - Glass for high reliability, low cost
  - Surface Mount packages for state of the art designs
- Power Ratings from 0.25 to 5.0 Watts
- Breakdown voltages from 1.8 to 400 V in approximately 10% steps
- TVS from 40 W to 1500 Watts and from 6.2 to 250 Volts
- ESD protection devices
- Available tolerances from 10% (low cost) to as tight as 1% (critical applications) with off-the-shelf delivery
- Special selection of electrical characteristics available at low cost due to high-volume lines (check your Motorola sales representative for special quotations)
- UL Recognition on many TVS device types
- Tape and Reel options available on all axial leaded and surface mount types

Voltage Regulator Diodes 5.2-2
Axial Leaded 5.2-2
Surface Mount 5.2-7
Voltage Reference Diodes 5.2-9
Temperature Compensated 5.2-9
TVS (Transient Voltage Suppressors) 5.2-10
General Purpose 5.2-10
Axial Leaded 5.2-10
Surface Mount 5.2-18
Automotive 5.2-23

Zener Voltage Regulator Diodes

Table 1 — Axial Leaded for Thru-hole Designs

Glass
Case 299-02
DO-204AH
(DO-35)

Nominal Zener Breakdown Voltage	500 mW Cathode = Polarity Band	500 mW Low Level Cathode = Polarity Band	500 mW Cathode = Polarity Band					500 mW Low Level Cathode = Polarity Band	500 mW Cathode = Polarity Band	
(*Note 1)	(*Note 2)	(*Note 3)	(*Note 4)	(*Note 5)	(*Note 6)	(*Note 7)	(*Note 8)	(*Note 9)	(*Note 10)	(*Note 8)
Volts										
1.8		1N4678						MZ4614		
2.0		1N4679						MZ4615		
2.2		1N4680						MZ4616		
2.4	1N4370A	1N4681	***1N5221B***	1N5985B	BZX55C2V4	BZX79C2V4		MZ4617		
2.5			1N5222B							
2.7	1N4371A	1N4682	***1N5223B***	1N5986B	BZX55C2V7	BZX79C2V7	BZX83C2V7	MZ4618		ZPD2.7
2.8			1N5224B							
3.0	1N4372A	1N4683	1N5225B	1N5987B	BZX55C3V0	BZX79C3V0	BZX83C3V0	MZ4619		ZPD3.0
3.3	1N746A	1N4684	***1N5226B***	***1N5988B***	BZX55C3V3	BZX79C3V3	BZX83C3V3	MZ4620		ZPD3.3
3.6	1N747A	1N4685	1N5227B	1N5989B	BZX55C3V6	BZX79C3V6	BZX83C3V6	MZ4621		ZPD3.6
3.9	1N748A	1N4686	***1N5228B***	1N5990B	BZX55C3V9	BZX79C3V9	BZX83C3V9	MZ4622	MZ5520B	ZPD3.9
4.3	1N749A	1N4687	***1N5229B***	1N5991B	BZX55C4V3	BZX79C4V3	BZX83C4V3	MZ4623	MZ5521B	ZPD4.3
4.7	1N750A	1N4688	***1N5230B***	1N5992B	BZX55C4V7	BZX79C4V7	BZX83C4V7	MZ4624	MZ5522B	ZPD4.7
5.1	1N751A	***1N4689***	***1N5231B***	***1N5993B***	BZX55C5V1	BZX79C5V1	BZX83C5V1	MZ4625	MZ5523B	ZPD5.1
5.6	1N752A	1N4690	***1N5232B***	***1N5994B***	BZX55C5V6	BZX79C5V6	BZX83C5V6	MZ4626	MZ5524B	ZPD5.6
6.0			***1N5233B***							
6.2	1N753A	1N4691	***1N5234B***	1N5995B	BZX55C6V2	BZX79C6V2	BZX83C6V2	MZ4627	MZ5525B	ZPD6.2
6.8	1N754A 1N957B	1N4692	***1N5235B***	1N5996B	BZX55C6V8	BZX79C6V8	BZX83C6V8	MZ4099	MZ5526B	ZPD6.8
7.5	1N755A 1N958B	1N4693	***1N5236B***	1N5997B	BZX55C7V5	BZX79C7V5	BZX83C7V5	MZ4100	MZ5527B	ZPD7.5
8.2	1N756A 1N959B	1N4694	***1N5237B***	***1N5998B***	BZX55C8V2	BZX79C8V2	BZX83C8V2	MZ4101	MZ5528B	ZPD8.2
8.7		1N4695	1N5238B					MZ4102		
9.1	1N757A 1N960B	1N4696	***1N5239B***	1N5999B	BZX55C9V1	BZX79C9V1	BZX83C9V1	MZ4103	MZ5529B	ZPD9.1
10	1N758A 1N961B	1N4697	***1N5240B***	1N6000B	BZX55C10	BZX79C10	BZX83C10	MZ4104	MZ5530B	ZPD10
11	1N962B	1N4698	1N5241B	1N6001B	BZX55C11	BZX79C11	BZX83C11			ZPD11
12	1N759A 1N963B	1N4699	***1N5242B***	1N6002B	BZX55C12	BZX79C12	BZX83C12			ZPD12
13	1N964B	1N4700	***1N5243B***	1N6003B	BZX55C13	BZX79C13	BZX83C13			ZPD13
14		1N4701	***1N5244B***							
15	1N965B	1N4702	***1N5245B***	1N6004B	BZX55C15	BZX79C15	BZX83C15			ZPD15
16	1N966B	1N4703	***1N5246B***	1N6005B	BZX55C16	BZX79C16	BZX83C16			ZPD16
17		1N4704	1N5247B							
18	1N967B	1N4705	***1N5248B***	1N6006B	BZX55C18	BZX79C18	BZX83C18			ZPD18
19		1N4706	1N5249B							
20	1N968B	1N4707	***1N5250B***	***1N6007B***	BZX55C20	BZX79C20	BZX83C20			ZPD20
22	1N969B	1N4708	1N5251B	1N6008B	BZX55C22	BZX79C22	BZX83C22			ZPD22
24	1N970B	1N4709	***1N5252B***	1N6009B	BZX55C24	BZX79C24	BZX83C24			ZPD24
25		1N4710	1N5253B							
27	1N971B	1N4711	***1N5254B***	1N6010B	BZX55C27	BZX79C27	BZX83C27			ZPD27
28		1N4712	1N5255B							
30	1N972B	1N4713	***1N5256B***	1N6011B	BZX55C30	BZX79C30	BZX83C30			ZPD30
33	1N973B	1N4714	***1N5257B***	1N6012B	BZX55C33	BZX79C33	BZX83C33			ZPD33
36	1N974B	1N4715	***1N5258B***	1N6013B	BZX55C36	BZX79C36				
39	1N975B	1N4716	1N5259B	1N6014B	BZX55C39	BZX79C39				
43	1N976B	1N4717	1N5260B	1N6015B	BZX55C43	BZX79C43				
47	1N977B		1N5261B	1N6016B	BZX55C47	BZX79C47				
51	1N978B		1N5262B	1N6017B	BZX55C51	BZX79C51				
56	1N979B		1N5263B	1N6018B	BZX55C56	BZX79C56				
60			1N5264B							
62	1N980B		1N5265B	1N6019B	BZX55C62	BZX79C62				
68	1N981B		1N5266B	1N6020B	BZX55C68	BZX79C68				

*See Notes — page 5.2-6

Devices listed in bold, italic are Motorola preferred devices.

Table 1 — Axial Leaded for Thru-hole Designs (continued)

Nominal Zener Breakdown Voltage	500 mW Cathode = Polarity Band	500 mW Low Level Cathode = Polarity Band	500 mW Cathode = Polarity Band					500 mW Low Level Cathode = Polarity Band	500 mW Cathode = Polarity Band	
(*Note 1)	(*Note 2)	(*Note 3)	(*Note 4)	(*Note 5)	(*Note 6)	(*Note 7)	(*Note 8)	(*Note 9)	(*Note 10)	(*Note 8)
Volts				Glass Case 299-02 DO-204AH (DO-35)						
75	1N982B		1N5267B	1N6021B	BZX55C75	BZX79C75				
82	1N983B		1N5268B	1N6022B	BZX55C82	BZX79C82				
87			1N5269B							
91	1N984B		1N5270B	1N6023B	BZX55C91	BZX79C91				
100	1N985B		1N5271B	1N6024B		BZX79C100				
110	1N986B		1N5272B	1N6025B		BZX79C110				
120	1N987B		1N5273B			BZX79C120				
130	1N988B		1N5274B			BZX79C130				
140			1N5275B							
150	1N989B		1N5276B			BZX79C150				
160	1N990B		1N5277B			BZX79C160				
170			1N5278B							
180	1N991B		1N5279B			BZX79C180				
190			1N5280B							
200	1N992B		1N5281B			BZX79C200				
220										
240										
270										
300										
330										
360										
400										

*See Notes — page 5.2-6

Devices listed in bold, italic are Motorola preferred devices.

Zener Voltage Regulator Diodes (continued)

Table 1 — Axial Leaded for Thru-hole Designs (continued)

Nominal Zener Breakdown Voltage	1 Watt Cathode = Polarity Band		1.3 Watt Cathode = Polarity Band			1.5 Watt Cathode = Polarity Band	3 Watt Cathode = Polarity Band	5 Watt Cathode = Polarity Band
(*Note 1)	(*Note 11)	(*Note 12)	(*Note 13)	(*Note 14)	(*Note 15)	(*Note 16)	(*Note 17)	(*Note 18)
Volts	Glass Case 59-03 (DO-41)	Plastic Surmetic 30 Case 59-03 (DO-41)	Glass Case 59-03 (DO-41)			Plastic Surmetic 30 Case 59-03 (DO-41)		Plastic Surmetic 40 Case 17-02
1.8								
2.0								
2.2								
2.4								
2.5								
2.7								
2.8								
3.0								
3.3	***1N4728A***	MZP4728A	BZX85C3V3			1N5913B		***1N5333B***
3.6	1N4729A	MZP4729A	BZX85C3V6			1N5914B		1N5334B
3.9	1N4730A	MZP4730A	BZX85C3V9	MZPY3.9	MZD3.9	1N5915B	3EZ3.9D5	1N5335B
4.3	***1N4731A***	MZP4731A	BZX85C4V3	MZPY4.3	MZD4.3	1N5916B	3EZ4.3D5	1N5336B
4.7	***1N4732A***	MZP4732A	BZX85C4V7	MZPY4.7	MZD4.7	1N5917B	3EZ4.7D5	1N5337B
5.1	***1N4733A***	***MZP4733A***	BZX85C5V1	MZPY5.1	MZD5.1	***1N5918B***	3EZ5.1D5	***1N5338B***
5.6	***1N4734A***	MZP4734A	BZX85C5V6	MZPY5.6	MZD5.6	1N5919B	3EZ5.6D5	***1N5339B***
6.0								1N5340B
6.2	***1N4735A***	***MZP4735A***	BZX85C6V2	MZPY6.2	MZD6.2	***1N5920B***	3EZ6.2D5	1N5341B
6.8	***1N4736A***	MZP4736A	BZX85C6V8	MZPY6.8	MZD6.8	1N5921B	3EZ6.8D5	***1N5342B***
7.5	1N4737A	MZP4737A	BZX85C7V5	MZPY7.5	MZD7.5	1N5922B	3EZ7.5D5	***1N5343B***
8.2	***1N4738A***	MZP4738A	BZX85C8V2	MZPY8.2	MZD8.2	1N5923B	3EZ8.2D5	***1N5344B***
8.7								1N5345B
9.1	***1N4739A***	MZP4739A	BZX85C9V1	MZPY9.1	MZD9.1	1N5924B	3EZ9.1D5	1N5346B
10	***1N4740A***	MZP4740A	BZX85C10	MZPY10	MZD10	1N5925B	3EZ10D5	***1N5347B***
11	***1N4741A***	MZP4741A	BZX85C11	MZPY11	MZD11	1N5926B	3EZ11D5	1N5348B
12	***1N4742A***	MZP4742A	BZX85C12	MZPY12	MZD12	1N5927B	3EZ12D5	***1N5349B***
13	***1N4743A***	MZP4743A	BZX85C13	MZPY13	MZD13	1N5928B	3EZ13D5	***1N5350B***
14							3EZ14D5	1N5351B
15	***1N4744A***	***MZP4744A***	BZX85C15	MZPY15	MZD15	***1N5929B***	3EZ15D5	***1N5352B***
16	***1N4745A***	***MZP4745A***	BZX85C16	MZPY16	MZD16	1N5930B	3EZ16D5	***1N5353B***
17							3EZ17D5	1N5354B
18	***1N4746A***	***MZP4746A***	BZX85C18	MZPY18	MZD18	1N5931B	3EZ18D5	***1N5355B***
19							3EZ19D5	1N5356B
20	***1N4747A***	MZP4747A	BZX85C20	MZPY20	MZD20	1N5932B	3EZ20D5	***1N5357B***
22	1N4748A	MZP4748A	BZX85C22	MZPY22	MZD22	1N5933B	3EZ22D5	1N5358B
24	***1N4749A***	***MZP4749A***	BZX85C24	MZPY24	MZD24	***1N5934B***	3EZ24D5	***1N5359B***
25								***1N5360B***
27	***1N4750A***	MZP4750A	BZX85C27	MZPY27	MZD27	1N5935B	3EZ27D5	***1N5361B***
28							3EZ28D5	1N5362B
30	***1N4751A***	***MZP4751A***	BZX85C30	MZPY30	MZD30	***1N5936B***	3EZ30D5	***1N5363B***
33	1N4752A	MZP4752A	BZX85C33	MZPY33	MZD33	1N5937B	3EZ33D5	***1N5364B***
36	1N4753A	MZP4753A	BZX85C36	MZPY36	MZD36	1N5938B	3EZ36D5	***1N5365B***
39	1N4754A	MZP4754A	BZX85C39	MZPY39	MZD39	1N5939B	3EZ39D5	***1N5366B***
43	1N4755A	MZP4755A	BZX85C43	MZPY43	MZD43	1N5940B	3EZ43D5	1N5367B
47	1N4756A	MZP4756A	BZX85C47	MZPY47	MZD47	***1N5941B***	3EZ47D5	***1N5368B***
51	1N4757A	MZP4757A	BZX85C51	MZPY51	MZD51	1N5942B	3EZ51D5	1N5369B
56	1N4758A	MZP4758A	BZX85C56	MZPY56	MZD56	1N5943B	3EZ56D5	1N5370B
60								1N5371B
62	1N4759A	MZP4759A	BZX85C62	MZPY62	MZD62	1N5944B	3EZ62D5	***1N5372B***
68	1N4760A	MZP4760A	BZX85C68	MZPY68	MZD68	1N5945B	3EZ68D5	1N5373B

*See Notes — page 5.2-6

Devices listed in bold, italic are Motorola preferred devices.

Table 1 — Axial Leaded for Thru-hole Designs (continued)

Nominal Zener Breakdown Voltage	1 Watt Cathode = Polarity Band		1.3 Watt Cathode = Polarity Band			1.5 Watt Cathode = Polarity Band	3 Watt Cathode = Polarity Band	5 Watt Cathode = Polarity Band
(*Note 1)	(*Note 11)	(*Note 12)	(*Note 13)	(*Note 14)	(*Note 15)	(*Note 16)	(*Note 17)	(*Note 18)
Volts	Glass Case 59-03 (DO-41)	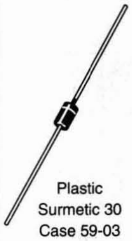 Plastic Surmetic 30 Case 59-03 (DO-41)	Glass Case 59-03 (DO-41)			Plastic Surmetic 30 Case 59-03 (DO-41)		Plastic Surmetic 40 Case 17-02
75	1N4761A	MZP4761A	BZX85C75	MZPY75	MZD75	1N5946B	3EZ75D5	1N5374B
82	1N4762A	MZP4762A	BZX85C82	MZPY82	MZD82	1N5947B	3EZ82D5	1N5375B
87								1N5376B
91	1N4763A	MZP4763A	BZX85C91	MZPY91	MZD91	1N5948B	3EZ91D5	1N5377B
100	1N4764A	MZP4764A	BZX85C100	MZPY100	MZD100	1N5949B	3EZ100D5	1N5378B
110		1M110ZS5			MZD110	1N5950B	3EZ110D5	1N5379B
120		1M120ZS5			MZD120	1N5951B	3EZ120D5	1N5380B
130		1M130ZS5			MZD130	1N5952B	3EZ130D5	1N5381B
140							3EZ140D5	1N5382B
150		1M150ZS5			MZD150	1N5953B	3EZ150D5	***1N5383B***
160		1M160ZS5			MZD160	1N5954B	3EZ160D5	1N5384B
170							3EZ170D5	1N5385B
180		1M180ZS5			MZD180	1N5955B	3EZ180D5	1N5386B
190							3EZ190D5	1N5387B
200		1M200ZS5			MZD200	1N5956B	3EZ200D5	1N5388B
220							3EZ220D5	
240							3EZ240D5	
270							3EZ270D5	
300							3EZ300D5	
330							3EZ330D5	
360							3EZ360D5	
400							3EZ400D5	

*See Notes — page 5.2-6

Devices listed in bold, italic are Motorola preferred devices.

Zener Voltage Regulator Diodes (continued)

NOTES — AXIAL LEADED CHART

1. *Zener Voltage* is the key parameter for each device type. It is specified at a particular test current applied at either thermal equilibrium (T.E.) or pulse test condition. The voltage tolerance for the device types listed is, in general, ± 5%; however, for some series, the voltage tolerance varies from device type to device type over a range of ± (5 to 8.5)%. Consult the complete data sheet to determine the exact test conditions and minimum/maximum limits for the zener voltage. Consult Application Note AN924 regarding measurement of Zener Voltage (pulse versus thermal equilibrium).

   Power Ratings represent the capability of the case size listed as supplied by Motorola. These ratings may be higher than the JEDEC registration and/or the same device types supplied by other manufacturers.

V_Z TEST CONDITIONS AND TOLERANCES

2. *1N4370A/1N746A Series*
   I_{ZT} = 20 mA (T.E.).
   - No suffix = ±10%.
   - A suffix = ±5%.
   - C suffix = ±2%.
   - D suffix = ±1%.

   1N957B Series
   I_{ZT} @ approximately 125 mW point (T.E.).
   - A suffix = ±10%.
   - B suffix = ±5%.
   - C suffix = ±2%.
   - D suffix = ±1%.

3. *1N4678 Series* — I_{ZT} = 50 µA (T.E.).
   - No suffix = ±5%.
   - C suffix = ±2%.
   - D suffix = ±1%.
   - Also has delta V_Z parameter and limit.

4. *1N5221B-42B* — I_{ZT} = 20 mA (T.E.).
   1N5243B-81B — I_{ZT} @ approximately 125 mW point (T.E.).
   - A suffix = ±10%.
   - B suffix = ±5%.
   - C suffix = ±2%.
   - D suffix = ±1%.

5. *1N5985B-6013B* — I_{ZT} = 5 mA (T.E.).
   1N6014B-23B — I_{ZT} = 2 mA (T.E.).
   1N6024B-25B — I_{ZT} = 1 mA (T.E.).
   - A suffix = ±10%.
   - B suffix = ±5%.
   - C suffix = ±2%.
   - D suffix = ±1%.

6. *BZX55C2V4-C36* — I_{ZT} = 5 mA (T.E.).
   BZX55C39-C82 — I_{ZT} = 2.5 mA (T.E.).
   BZX55C91 — I_{ZT} = 1 mA (T.E.).
   C indicates ±(5 to 8.5)% depending on type number.
   Replace C with B for ±2%.

7. *BZX79C2V4-C24* — I_{ZT} = 5 mA (pulse).
   BZX79C27-C91 — I_{ZT} = 2 mA (pulse).
   BZX79C100-C200 — I_{ZT} = 1 mA (pulse).
   C indicates ±(5 to 8.5)% depending on type number.
   Replace C with B for ±2%.
   Replace C with A for ±1%.

8. *BZX83C2V7-C33* — I_{ZT} = 5 mA (pulse).
   ZPD2.7-33 — I_{ZT} = 5 mA (pulse).
   Tolerance is ±(5 to 8.5)% depending on type number.

9. *MZ4614-27* — I_{ZT} = 250 µA (T.E.).
   MZ4099-4104 — I_{ZT} = 250 µA (T.E.).
   Tolerance is ±5%.

10. *MZ5520B-21B* — I_{ZT} = 20 mA (T.E.).
    MZ5522B — I_{ZT} = 10 mA (T.E.).
    MZ5523B — I_{ZT} = 5 mA (T.E.).
    MZ5524B — I_{ZT} = 3 mA (T.E.).
    MZ5525B-30B — I_{ZT} = 1 mA (T.E.).
    Tolerance is ±5%.
    Also has delta V_Z parameter and limit.

11. *1N4728A-64A*
    I_{ZT} @ approximately 250 mW point (T.E.).
    - No suffix = ±10%.
    - A suffix = ±5%.
    - C suffix = ±2%.
    - D suffix = ±1%.

12. *MZP4728A-64A*
    1M110ZS5-200ZS5
    I_{ZT} @ approximately 250 mW point (T.E.).
    - MZP Series non suffix = ±10%.
    - MZP Series A suffix = ±5%.
    - 1M Series 10 suffix = ±10%.
    - 1M Series 5 suffix = ±5%.

13. *BZX85C3V3-C100*
    I_{ZT} varies from 185 mW to 300 mW point depending on type number (pulse).
    C indicates ±(5 to 8.5)% depending on type number.
    Replace C with B for ±2%.

14. *MZPY3.9-8.2* — I_{ZT} = 100 mA (pulse).
    MZPY9.1-15 — I_{ZT} = 50 mA (pulse).
    MZPY16-33 — I_{ZT} = 25 mA (pulse).
    MZPY36-82 — I_{ZT} = 10 mA (pulse).
    MZPY91-100 — I_{ZT} = 5 mA (pulse).
    No suffix tolerance is approximately ±(5 to 8.5)% depending on type number.
    - C suffix = ±2%.
    - D suffix = ±1%.

15. *MZD3.9-8.2* — I_{ZT} = 100 mA (pulse).
    MZD9.1-15 — I_{ZT} = 50 mA (pulse).
    MZD16-33 — I_{ZT} = 25 mA (pulse).
    MZD36-82 — I_{ZT} = 10 mA (pulse).
    MZD91-200 — I_{ZT} = 5 mA (pulse).
    Tolerance is ±(5 to 8.5)% depending on type number.

16. *1N5913B-56B*
    I_{ZT} @ approximately 375 mW point (T.E.).
    - A suffix = ±10%.
    - B suffix = ±5%.

17. *3EZ3.9D5-400D5*
    I_{ZT} @ approximately 750 mW point (pulse).
    - Suffix 10= ±10%.
    - Suffix 5 = ±5%.

18. *1N5333B-88B*
    I_{ZT} varies from 0.9 to 1.5 W point depending on type number (pulse)
    - A suffix = ±10%.
    - B suffix = ±5%.
    - Also has delta V_Z parameter and limit.

Table 2 — Surface Mount Packages

Nominal Zener Breakdown Voltage	225 mW Surface Mount SOT-23		500 mW Surface Mount Leadless MLL34	500 mW Low Level Surface Mount Leadless MLL34	500 mW Surface Mount Leadless MLL34	1.5 Watt Surface Mount SMB
(*Note 1)	(*Note 2)	(*Note 3)	(*Note 4)	(*Note 5)	(*Note 6)	(*Note 7)
Volts	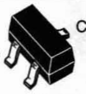 Plastic Case 318-07 TO-236AB			Glass Case 362-03 Cathode = Polarity Band		Plastic Case 403A-03 Cathode = Notch
1.8				MLL4678		
2.0				MLL4679		
2.2				MLL4680		
2.4	BZX84C2V4L	MMBZ5221BL	BZV55C2V4	MLL4681	MLL5221B	
2.5		MMBZ5222BL			MLL5222B	
2.7	BZX84C2V7L	MMBZ5223BL	BZV55C2V7	MLL4682	MLL5223B	
2.8		MMBZ5224BL			MLL5224B	
3.0	BZX84C3V0L	MMBZ5225BL	BZV55C3V0	MLL4683	MLL5225B	
3.3	BZX84C3V3L	***MMBZ5226BL***	BZV55C3V3	MLL4684	MLL5226B	1SMB5913BT3
3.6	BZX84C3V6L	MMBZ5227BL	BZV55C3V6	MLL4685	MLL5227B	1SMB5914BT3
3.9	BZX84C3V9L	MMBZ5228BL	BZV55C3V9	MLL4686	MLL5228B	1SMB5915BT3
4.3	BZX84C4V3L	***MMBZ5229BL***	BZV55C4V3	MLL4687	MLL5229B	1SMB5916BT3
4.7	***BZX84C4V7L***	***MMBZ5230BL***	BZV55C4V7	MLL4688	MLL5230B	1SMB5917BT3
5.1	***BZX84C5V1L***	***MMBZ5231BL***	BZV55C5V1	MLL4689	***MLL5231B***	***1SMB5918BT3***
5.6	***BZX84C5V6L***	***MMBZ5232BL***	BZV55C5V6	MLL4690	MLL5232B	1SMB5919BT3
6.0		MMBZ5233BL			***MLL5233B***	
6.2	***BZX84C6V2L***	***MMBZ5234BL***	BZV55C6V2	MLL4691	MLL5234B	***1SMB5920BT3***
6.8	***BZX84C6V8L***	***MMBZ5235BL***	BZV55C6V8	MLL4692	MLL5235B	1SMB5921BT3
7.5	BZX84C7V5L	***MMBZ5236BL***	BZV55C7V5	MLL4693	MLL5236B	1SMB5922BT3
8.2	***BZX84C8V2L***	***MMBZ5237BL***	BZV55C8V2	MLL4694	MLL5237B	1SMB5923BT3
8.7		MMBZ5238BL		MLL4695	MLL5238B	
9.1	***BZX84C9V1L***	***MMBZ5239BL***	BZV55C9V1	MLL4696	MLL5239B	1SMB5924BT3
10	***BZX84C10L***	***MMBZ5240BL***	BZV55C10	MLL4697	MLL5240B	***1SMB5925BT3***
11	BZX84C11L	MMBZ5241BL	BZV55C11	MLL4698	MLL5241B	1SMB5926BT3
12	***BZX84C12L***	***MMBZ5242BL***	BZV55C12	MLL4699	MLL5242B	***1SMB5927BT3***
13	BZX84C13L	MMBZ5243BL	BZV55C13	MLL4700	MLL5243B	1SMB5928BT3
14		MMBZ5244BL		MLL4701	***MLL5244B***	
15	***BZX84C15L***	***MMBZ5245BL***	BZV55C15	MLL4702	MLL5245B	***1SMB5929BT3***
16	BZX84C16L	MMBZ5246BL	BZV55C16	MLL4703	MLL5246B	1SMB5930BT3
17		MMBZ5247BL		MLL4704	MLL5247B	
18	BZX84C18L	MMBZ5248BL	BZV55C18	MLL4705	MLL5248B	***1SMB5931BT3***
19		MMBZ5249BL		MLL4706	MLL5249B	
20	BZX84C20L	MMBZ5250BL	BZV55C20	MLL4707	MLL5250B	1SMB5932BT3
22	BZX84C22L	MMBZ5251BL	BZV55C22	MLL4708	MLL5251B	1SMB5933BT3
24	BZX84C24L	MMBZ5252BL	BZV55C24	MLL4709	***MLL5252B***	***1SMB5934BT3***
25		MMBZ5253BL		MLL4710	MLL5253B	
27	BZX84C27L	***MMBZ5254BL***	BZV55C27	MLL4711	MLL5254B	1SMB5935BT3
28		***MMBZ5255BL***		MLL4712	MLL5255B	
30	***BZX84C30L***	MMBZ5256BL	BZV55C30	MLL4713	MLL5256B	***1SMB5936BT3***
33	BZX84C33L	MMBZ5257BL	BZV55C33	MLL4714	MLL5257B	1SMB5937BT3
36	BZX84C36L	MMBZ5258BL	BZV55C36	MLL4715	MLL5258B	1SMB5938BT3
39	BZX84C39L	MMBZ5259BL	BZV55C39	MLL4716	MLL5259B	1SMB5939BT3
43	BZX84C43L	MMBZ5260BL	BZV55C43	MLL4717	MLL5260B	1SMB5940BT3

*See Notes — page 5.2-8

Devices listed in bold, italic are Motorola preferred devices.

Zener Voltage Regulator Diodes (continued)

Table 2 — Surface Mount Packages (continued)

Nominal Zener Breakdown Voltage	225 mW Surface Mount SOT-23		500 mW Surface Mount Leadless MLL34	500 mW Low Level Surface Mount Leadless MLL34	500 mW Surface Mount Leadless MLL34	1.5 Watt Surface Mount SMB
(*Note 1)	(*Note 2)	(*Note 3)	(*Note 4)	(*Note 5)	(*Note 6)	(*Note 7)
Volts	Plastic Case 318-07 TO-236AB		Glass Case 362-03 Cathode = Polarity Band			Plastic Case 403A-03 Cathode = Notch
47	BZX84C47L	MMBZ5261BL	BZV55C47		MLL5261B	1SMB5941BT3
51	BZX84C51L	MMBZ5262BL	BZV55C51		MLL5262B	1SMB5942BT3
56	BZX84C56L	MMBZ5263BL	BZV55C56		MLL5263B	1SMB5943BT3
60		MMBZ5264BL				
62	BZX84C62L	MMBZ5265BL				1SMB5944BT3
68	BZX84C68L	MMBZ5266BL				1SMB5945BT3
75	BZX84C75L	MMBZ5267BL				1SMB5946BT3
82		MMBZ5268BL				1SMB5947BT3
87		MMBZ5269BL				
91		MMBZ5270BL				1SMB5948BT3
100						1SMB5949BT3
110						1SMB5950BT3
120						1SMB5951BT3
130						1SMB5952BT3
150						1SMB5953BT3
160						1SMB5954BT3
170						
180						1SMB5955BT3
200						1SMB5956BT3

*See Notes on this page.

NOTES — SURFACE MOUNT CHART

1. *Zener Voltage* is the key parameter for each device type. It is specified at a particular test current applied at either thermal equilibrium (T.E.) or pulse test condition. The voltage tolerance for the device types listed is, in general ±5%; however, for some series, the voltage tolerance varies from device type to device type over a range of ±(5 to 8.5)%. Consult the complete data sheet to determine the exact test conditions and minimum/maximum limits for the zener voltage.

   Power Ratings represent the capability of the case size listed as supplied by Motorola. These ratings may be higher than the same device types supplied by other manufacturers.

V_Z TEST CONDITIONS AND TOLERANCES

2. *BZX84C2V4L-C24L* I_{ZT} = 5 mA (pulse).
   BZX84C27L-C75L I_{ZT} = 2 mA (pulse).

   Tolerance is ±(5 to 8.5)% depending on type number. Each device type also has other V_Z min/max limits at two other I_{ZT} pulse current values.

3. *MMBZ5221BL-42BL* I_{ZT} = 20 mA (pulse).
   MMBZ5243BL-70BL I_{ZT} @ approximately 125 mW point (pulse).

   BL suffix = ±5%.

4. BZV55C2V4-C24 I_{ZT} = 5 mA (pulse).
   BZV55C27-C56 I_{ZT} = 2 mA (pulse).

   Tolerance is ±(5 to 8.5)% depending on type number. Each device type also has other V_Z min/max limits at two other I_{ZT} pulse current values.

5. *MLL4678 Series* I_{ZT} = 50 µA (T.E.).

   No suffix = ±5%.

6. *MLL5221B-42B* I_{ZT} = 20 mA (T.E.).
   MLL5243B-63B I_{ZT} @ approximately 125 mW point (T.E.).

   A suffix = ±10%.
   B suffix = ±5%.

7. *1SMB5913BT3 Series*
   I_{ZT} @ approximately 375 mW point (T.E.).

   BT3 suffix = ±5%.
   T3 suffix designates tape and reel of 2500 units.

Voltage Reference Diodes

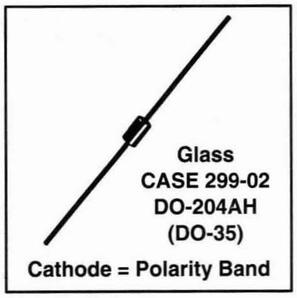

Temperature Compensated Reference Devices

For applications where output voltage must remain within narrow limits during changes in input voltage, load resistance and temperature. Motorola guarantees all reference devices to fall within the specified maximum voltage variations, ΔV_Z, at the specifically indicated test temperatures and test current (JEDEC Standard #5). Temperature coefficient is also specified but should be considered as a reference only — not a maximum rating.

Devices in this table are hermetically sealed structures.

Table 3 — Temperature Compensated Reference Devices

			AVERAGE TEMPERATURE COEFFICIENT OVER THE OPERATING RANGE									
			0.01 %/°C		0.005 %/°C		0.002 %/°C		0.001 %/°C		0.0005 %/°C	
V_Z Volts	Test Current mAdc	Test[(2)] Temp Points	Device Type	ΔV_Z Max Volts	Device Type	ΔV_Z Max Volts	Device Type	ΔV_Z Max Volts	Device Type	ΔV_Z Max Volts	Device Type	ΔV_Z Max Volts
6.2[(1)]	7.5	A	***1N821***	0.096	***1N823***	0.048	***1N825***	0.019	1N827	0.009	1N829	0.005
6.2[(1)]	7.5	A	1N821A	0.096	1N823A	0.048	1N825A	0.019	1N827A	0.009	1N829A	0.005
6.4	0.5	B	1N4565	0.048	1N4566	0.024	1N4567	0.010	1N4568	0.005	1N4569	0.002
	0.5	A	1N4565A	0.099	1N4566A	0.050	1N4567A	0.020	1N4568A	0.010	1N4569A	0.005
	1	B	1N4570	0.048	1N4571	0.024	1N4572	0.010	1N4573	0.005	1N4574	0.002
	1	A	1N4570A	0.099	1N4571A	0.050	1N4572A	0.020	1N4573A	0.010	1N4574A	0.005

(1) Non-suffix — Z_{ZT} = 15 ohms, "A" Suffix — Z_{ZT} = 10 ohms
(2) **Test Temperature Points °C: A** = −55, 0, +25, +75, +100 **B** = 0, +25, +75

Devices listed in bold, italic are Motorola preferred devices.

TVS (Transient Voltage Suppressors)

General-Purpose

Transient Voltage Suppressors are designed for applications requiring protection of voltage sensitive electronic devices in danger of destruction by high energy voltage transients. Many of the zener voltage regulator diodes listed in the previous charts are in fact used in circuits as transient voltage suppressors. The purpose of this section is to present the families of Motorola Zeners that are specified with the key transient voltage suppressor parameters and limits, e.g., maximum clamping voltage at maximum surge current rating and working peak reverse (stand-off) voltage.

Selection sequence:

1. select the package type (axial or surface mount)
2. select the peak surge power expected for the application
3. select the working peak reverse stand-off voltage (or the breakdown voltage)
4. select the maximum reverse clamping voltage

Consult the factory for special electrical selections if there is no standard device type available to fit the application.

Axial Leaded for Thru-hole Designs

Table 4 — Peak Power Dissipation(3) — *500 Watts* @ 1 ms Surge (Figure 1) — Case 59-04

ELECTRICAL CHARACTERISTICS (T_A = 25°C unless otherwise noted) V_F = 3.5 V Max, I_F = 35 A Pulse (except bidirectional devices).

Working Peak Reverse Voltage V_{RWM} (Volts)	Device(4)	Breakdown Voltage V_{BR} (Volts) Min	Breakdown Voltage V_{BR} (Volts) Max	Breakdown Voltage @ I_T Pulse (mA)	Maximum Reverse Leakage @ V_{RWM} I_R (μA)	Maximum Reverse Surge Current I_{RSM} Figure 1 (Amps)	Maximum Reverse Voltage @ I_{RSM} (Clamping Voltage) V_{RSM} (Volts)
5	SA5.0	6.4	7.3	10	600	52	9.6
5	***SA5.0A***	6.4	7	10	600	54.3	9.2
6	SA6.0	6.67	8.15	10	600	43.9	11.4
6	***SA6.0A***	6.67	7.37	10	600	48.5	10.3
6.5	SA6.5	7.22	8.82	10	400	40.7	12.3
6.5	SA6.5A	7.22	7.98	10	400	44.7	11.2
7	SA7.0	7.78	9.51	10	150	37.8	13.3
7	SA7.0A	7.78	8.6	10	150	41.7	12
7.5	SA7.5	8.33	10.2	1	50	35	14.3
7.5	SA7.5A	8.33	9.21	1	50	38.8	12.9
8	SA8.0	8.89	10.9	1	25	33.3	15
8	SA8.0A	8.89	9.83	1	25	36.7	13.6
8.5	SA8.5	9.44	11.5	1	5	31.4	15.9
8.5	SA8.5A	9.44	10.4	1	5	34.7	14.4
9	SA9.0	10	12.2	1	1	29.5	16.9
9	SA9.0A	10	11.1	1	1	32.5	15.4
10	SA10	11.1	13.6	1	1	26.6	18.8
10	SA10A	11.1	12.3	1	1	29.4	17
11	SA11	12.2	14.9	1	1	24.9	20.1
11	SA11A	12.2	13.5	1	1	27.4	18.2
12	SA12	13.3	16.3	1	1	22.7	22
12	***SA12A***	13.3	14.7	1	1	25.1	19.9
13	SA13	14.4	17.6	1	1	21	23.8
13	***SA13A***	14.4	15.9	1	1	23.2	21.5
14	SA14	15.6	19.1	1	1	19.4	25.8
14	SA14A	15.6	17.2	1	1	21.5	23.2
15	SA15	16.7	20.4	1	1	18.8	26.9
15	***SA15A***	16.7	18.5	1	1	20.6	24.4
16	SA16	17.8	21.8	1	1	17.6	28.8
16	SA16A	17.8	19.7	1	1	19.2	26
17	SA17	18.9	23.1	1	1	16.4	30.5
17	SA17A	18.9	20.9	1	1	18.1	27.6

CASE 59-04
PLASTIC
Cathode = Polarity Band

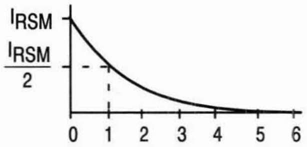

Surge Current Characteristics

Figure 1

(3) Steady state power dissipation = 3 watt max rating. (continued)
(4) For bidirectional types use C or CA suffix. ***SA6.5CA, SA12CA, SA13CA*** and ***SA15CA*** are Motorola preferred devices. Have cathode polarity band on each end. (Consult factory for availability)

Devices listed in bold, italic are Motorola preferred devices.

Axial Leaded for Thru-hole Designs (continued)

Table 4 — Peak Power Dissipation(3) — *500 Watts* @ 1 ms Surge (Figure 1) — Case 59-04 (continued)

ELECTRICAL CHARACTERISTICS (T_A = 25°C unless otherwise noted) V_F = 3.5 V Max, I_F = 35 A Pulse (except bidirectional devices).

Working Peak Reverse Voltage V_{RWM} (Volts)	Device(4)	Breakdown Voltage V_{BR} (Volts) Min	Breakdown Voltage V_{BR} (Volts) Max	@ I_T Pulse (mA)	Maximum Reverse Leakage @ V_{RWM} I_R (μA)	Maximum Reverse Surge Current I_{RSM} Figure 1 (Amps)	Maximum Reverse Voltage @ I_{RSM} (Clamping Voltage) V_{RSM} (Volts)
18	SA18	20	24.4	1	1	15.5	32.2
18	SA18A	20	22.1	1	1	17.2	29.2
20	SA20	22.2	27.1	1	1	13.9	35.8
20	SA20A	22.2	24.5	1	1	15.4	32.4
22	SA22	24.4	29.8	1	1	12.7	39.4
22	SA22A	24.4	26.9	1	1	14.1	35.5
24	SA24	26.7	32.6	1	1	11.6	43
24	SA24A	26.7	29.5	1	1	12.8	38.9
26	SA26	28.9	35.3	1	1	10.7	46.6
26	SA26A	28.9	31.9	1	1	11.9	42.1
28	SA28	31.1	38	1	1	9.9	50
28	SA28A	31.1	34.4	1	1	11	45.4
30	SA30	33.3	40.7	1	1	9.3	53.5
30	SA30A	33.3	36.8	1	1	10.3	48.4
33	SA33	36.7	44.9	1	1	8.5	59
33	SA33A	36.7	40.6	1	1	9.4	53.3
36	SA36	40	48.9	1	1	7.8	64.3
36	SA36A	40	44.2	1	1	8.6	58.1
40	SA40	44.4	54.3	1	1	7	71.4
40	SA40A	44.4	49.1	1	1	7.8	64.5
43	SA43	47.8	58.4	1	1	6.5	76.7
43	SA43A	47.8	52.8	1	1	7.2	69.4
45	SA45	50	61.1	1	1	6.2	80.3
45	SA45A	50	55.3	1	1	6.9	72.7
48	SA48	53.3	65.1	1	1	5.8	85.5
48	SA48A	53.3	58.9	1	1	6.5	77.4
51	SA51	56.7	69.3	1	1	5.5	91.1
51	SA51A	56.7	62.7	1	1	6.1	82.4
54	SA54	60	73.3	1	1	5.2	96.3
54	SA54A	60	66.3	1	1	5.7	87.1
58	SA58	64.4	78.7	1	1	4.9	103
58	SA58A	64.4	71.2	1	1	5.3	93.6
60	SA60	66.7	81.5	1	1	4.7	107
60	SA60A	66.7	73.7	1	1	5.2	96.8
64	SA64	71.1	86.9	1	1	4.4	114
64	SA64A	71.1	78.6	1	1	4.9	103
70	SA70	77.8	95.1	1	1	4	125
70	SA70A	77.8	86	1	1	4.4	113
75	SA75	83.3	102	1	1	3.7	134
75	SA75A	83.3	92.1	1	1	4.1	121
78	SA78	86.7	106	1	1	3.6	139
78	SA78A	86.7	95.8	1	1	4	126
85	SA85	94.4	115	1	1	3.3	151
85	SA85A	94.4	104	1	1	3.6	137
90	SA90	100	122	1	1	3.1	160
90	SA90A	100	111	1	1	3.4	146
100	SA100	111	136	1	1	2.8	179
100	SA100A	111	123	1	1	3.1	162

(3) Steady state power dissipation = 3 watt max rating.

(continued)

(4) For bidirectional types use C or CA suffix. ***SA18CA*** and ***SA24CA*** are Motorola preferred devices. Have cathode polarity band on each end. (Consult factory for availability)

Devices listed in bold, italic are Motorola preferred devices.

TVS (continued)

Table 4 — Peak Power Dissipation(3) — *500 Watts* @ 1 ms Surge (Figure 1) — Case 59-04 (continued)

ELECTRICAL CHARACTERISTICS (T_A = 25°C unless otherwise noted) V_F = 3.5 V Max, I_F = 35 A Pulse (except bidirectional devices).

Working Peak Reverse Voltage V_{RWM} (Volts)	Device(4)	Breakdown Voltage V_{BR} (Volts) Min	Breakdown Voltage V_{BR} (Volts) Max	@ I_T Pulse (mA)	Maximum Reverse Leakage @ V_{RWM} I_R (μA)	Maximum Reverse Surge Current I_{RSM} Figure 1 (Amps)	Maximum Reverse Voltage @ I_{RSM} (Clamping Voltage) V_{RSM} (Volts)
110	SA110	122	149	1	1	2.6	196
110	SA110A	122	135	1	1	2.8	177
120	SA120	133	163	1	1	2.3	214
120	SA120A	133	147	1	1	2.5	193
130	SA130	144	176	1	1	2.2	231
130	SA130A	144	159	1	1	2.4	209
150	SA150	167	204	1	1	1.9	268
150	SA150A	167	185	1	1	2.1	243
160	SA160	178	218	1	1	1.7	287
160	SA160A	178	197	1	1	1.9	259
170	SA170	189	231	1	1	1.6	304
170	SA170A	189	209	1	1	1.8	275

(3) Steady state power dissipation = 3 watt max rating.
(4) For bidirectional types use C or CA suffix. Have cathode polarity band on each end. (Consult factory for availability)

Table 5 — Peak Power Dissipation(5) — *600 Watts* @ 1 ms Surge (Figure 1) — Case 17-02

ELECTRICAL CHARACTERISTICS (T_A = 25°C unless otherwise noted) V_F = 3.5 V Max, I_F = 50 A Pulse (except bidirectional devices).

Breakdown Voltage(6) V_{BR} (Volts) Nom	Breakdown Voltage(6) @ I_T Pulse (mA)	Device(4, 7)	Working Peak Reverse Voltage V_{RWM} (Volts)	Maximum Reverse Leakage @ V_{RWM} I_R (μA)	Maximum Reverse Surge Current I_{RSM} Figure 1 (Amps)	Maximum Reverse Voltage @ I_{RSM} (Clamping Voltage) V_{RSM} (Volts)
6.8	10	P6KE6.8	5.5	1000	56	10.8
6.8	10	***P6KE6.8A***	5.8	1000	57	10.5
7.5	10	P6KE7.5	6.05	500	51	11.7
7.5	10	P6KE7.5A	6.4	500	53	11.3
8.2	10	P6KE8.2	6.63	200	48	12.5
8.2	10	P6KE8.2A	7.02	200	50	12.1
9.1	1	P6KE9.1	7.37	50	44	13.8
9.1	1	P6KE9.1A	7.78	50	45	13.4
10	1	P6KE10	8.1	10	40	15
10	1	P6KE10A	8.55	10	41	14.5
11	1	P6KE11	8.92	5	37	16.2
11	1	P6KE11A	9.4	5	38	15.6
12	1	P6KE12	9.72	5	35	17.3
12	1	P6KE12A	10.2	5	36	16.7
13	1	P6KE13	10.5	5	32	19
13	1	***P6KE13A***	11.1	5	33	18.2
15	1	P6KE15	12.1	5	27	22
15	1	***P6KE15A***	12.8	5	28	21.2
16	1	P6KE16	12.9	5	26	23.5
16	1	P6KE16A	13.6	5	27	22.5

CASE 17-02
PLASTIC
Cathode = Polarity Band

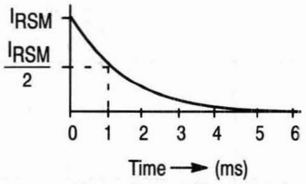

Surge Current Characteristics

Figure 1

(4) For bidirectional types use C or CA suffix. ***P6KE7.5CA*** and ***P6KE11CA*** are Motorola preferred devices. (continued)
Have cathode polarity band on each end. (Consult factory for availability)
(5) Steady state power dissipation = 5 watts max rating.
(6) Breakdown voltage tolerance is ±10% for no suffix and ±5% for A suffix.
(7) UL recognition for classification of protectors (QVGV2) under the UL standard for safety 497B for entire series including C & CA suffixes.

Devices listed in bold, italic are Motorola preferred devices.

Axial Leaded for Thru-hole Designs (continued)

Table 5 — Peak Power Dissipation(5) — *600 Watts* @ 1 ms Surge (Figure 1) — Case 17-02 (continued)

ELECTRICAL CHARACTERISTICS (T_A = 25°C unless otherwise noted) V_F = 3.5 V Max, I_F = 50 A Pulse (except bidirectional devices).

Breakdown Voltage(6) V_{BR} (Volts) Nom	@ I_T Pulse (mA)	Device(4, 7)	Working Peak Reverse Voltage V_{RWM} (Volts)	Maximum Reverse Leakage @ V_{RWM} I_R (μA)	Maximum Reverse Surge Current I_{RSM} Figure 1 (Amps)	Maximum Reverse Voltage @ I_{RSM} (Clamping Voltage) V_{RSM} (Volts)
18	1	P6KE18	14.5	5	23	26.5
18	1	P6KE18A	15.3	5	24	25.2
20	1	P6KE20	16.2	5	21	29.1
20	1	P6KE20A	17.1	5	22	27.7
22	1	P6KE22	17.8	5	19	31.9
22	1	P6KE22A	18.8	5	20	30.6
24	1	P6KE24	19.4	5	17	34.7
24	1	P6KE24A	20.5	5	18	33.2
27	1	P6KE27	21.8	5	15	39.1
27	1	***P6KE27A***	23.1	5	16	37.5
30	1	P6KE30	24.3	5	14	43.5
30	1	P6KE30A	25.6	5	14.4	41.4
33	1	P6KE33	26.8	5	12.6	47.7
33	1	***P6KE33A***	28.2	5	13.2	45.7
36	1	P6KE36	29.1	5	11.6	52
36	1	***P6KE36A***	30.8	5	12	49.9
39	1	P6KE39	31.6	5	10.6	56.4
39	1	P6KE39A	33.3	5	11.2	53.9
43	1	P6KE43	34.8	5	9.6	61.9
43	1	P6KE43A	36.8	5	10.1	59.3
47	1	P6KE47	38.1	5	8.9	67.8
47	1	P6KE47A	40.2	5	9.3	64.8
51	1	P6KE51	41.3	5	8.2	73.5
51	1	P6KE51A	43.6	5	8.6	70.1
56	1	P6KE56	45.4	5	7.4	80.5
56	1	P6KE56A	47.8	5	7.8	77
62	1	P6KE62	50.2	5	6.8	89
62	1	***P6KE62A***	53	5	7.1	85
68	1	P6KE68	55.1	5	6.1	98
68	1	P6KE68A	58.1	5	6.5	92
75	1	P6KE75	60.7	5	5.5	108
75	1	P6KE75A	64.1	5	5.8	103
82	1	P6KE82	66.4	5	5.1	118
82	1	P6KE82A	70.1	5	5.3	113
91	1	P6KE91	73.7	5	4.5	131
91	1	P6KE91A	77.8	5	4.8	125
100	1	P6KE100	81	5	4.2	144
100	1	P6KE100A	85.5	5	4.4	137
110	1	P6KE110	89.2	5	3.8	158
110	1	P6KE110A	94	5	4	152

(4) For bidirectional types use C or CA suffix. ***P6KE20CA, P6KE22CA, P6KE27CA*** and ***P6KE30CA*** are Motorola preferred devices. Have cathode polarity band on each end. (Consult factory for availability)

(continued)

(5) Steady state power dissipation = 5 watts max rating.

(6) Breakdown voltage tolerance is ±10% for no suffix and ±5% for A suffix.

(7) UL recognition for classification of protectors (QVGV2) under the UL standard for safety 497B for entire series including C & CA suffixes.

Devices listed in bold, italic are Motorola preferred devices.

TVS (continued)

Table 5 — Peak Power Dissipation(5) — *600 Watts* @ 1 ms Surge (Figure 1) — Case 17-02 (continued)

ELECTRICAL CHARACTERISTICS (T_A = 25°C unless otherwise noted) V_F = 3.5 V Max, I_F = 50 A Pulse (except bidirectional devices).

Breakdown Voltage(6)						
V_{BR} (Volts) Nom	@ I_T Pulse (mA)	Device(4,7)	Working Peak Reverse Voltage V_{RWM} (Volts)	Maximum Reverse Leakage @ V_{RWM} I_R (μA)	Maximum Reverse Surge Current I_{RSM} Figure 1 (Amps)	Maximum Reverse Voltage @ I_{RSM} (Clamping Voltage) V_{RSM} (Volts)
120	1	P6KE120	97.2	5	3.5	173
120	1	P6KE120A	102	5	3.6	165
130	1	P6KE130	105	5	3.2	187
130	1	P6KE130A	111	5	3.3	179
150	1	P6KE150	121	5	2.8	215
150	1	P6KE150A	128	5	2.9	207
160	1	P6KE160	130	5	2.6	230
160	1	P6KE160A	136	5	2.7	219
170	1	P6KE170	138	5	2.5	244
170	1	P6KE170A	145	5	2.6	234
180	1	P6KE180	146	5	2.3	258
180	1	P6KE180A	154	5	2.4	246
200	1	P6KE200	162	5	2.1	287
200	1	P6KE200A	171	5	2.2	274

(4) For bidirectional types use C or CA suffix. Have cathode polarity band on each end. (Consult factory for availability)
(5) Steady state power dissipation = 5 watts max rating.
(6) Breakdown voltage tolerance is ±10% for no suffix and ±5% for A suffix.
(7) UL recognition for classification of protectors (QVGV2) under the UL standard for safety 497B for entire series including C & CA suffixes.

Devices listed in bold, italic are Motorola preferred devices.

Axial Leaded for Thru-hole Designs (continued)

CASE 41A-02
PLASTIC
Cathode = Polarity Band

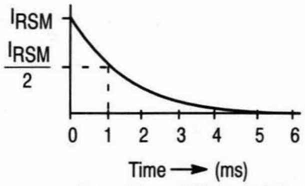

Surge Current Characteristics

Figure 1

Table 6 — Peak Power Dissipation[5] — *1500 WATTS* @ 1 ms Surge (Figure 1) — Case 41A-02

ELECTRICAL CHARACTERISTICS (T_A = 25°C unless otherwise noted) V_F = 3.5 V Max, I_F = 100 A Pulse)
(C suffix denotes standard back to back bidirectional versions. Test both polarities)

Maximum Reverse Stand-Off Voltage V_{RWM} (Volts)	JEDEC[8] Device	Device[8]	Breakdown Voltage V_{BR} Volts Min	Breakdown Voltage @ I_T Pulse (mA)	Maximum Reverse Leakage @ V_{RWM} I_R (µA)	Maximum Reverse Surge Current Figure 1 I_{RSM} (Amps)	Maximum Reverse Voltage @ I_{RSM} (Clamping Voltage) V_{RSM} (Volts)	Clamping Voltage[9] Peak Pulse Current @ I_{pp1} = 1 A Figure 1 V_{C1} (Volts max)	Clamping Voltage[9] Peak Pulse Current @ I_{pp2} = 10 A Figure 1 V_{C2} (Volts max)
5	***1N5908***		6	1	300	120	8.5	7.6 @ 30 A	8 @ 60 A
5	***1N6373***	ICTE-5/MPTE-5	6	1	300	160	9.4	7.1	7.5
8	1N6374	ICTE-8/MPTE-8	9.4	1	25	100	15	11.3	11.5
8	***1N6382***	ICTE-8C/MPTE-8C	9.4	1	25	100	15	11.4	11.6
10	1N6375	ICTE-10/MPTE-10	11.7	1	2	90	16.7	13.7	14.1
10	1N6383	ICTE-10C/MPTE-10C	11.7	1	2	90	16.7	14.1	14.5
12	***1N6376***	ICTE-12/MPTE-12	14.1	1	2	70	21.2	16.1	16.5
12	1N6384	ICTE-12C/MPTE-12C	14.1	1	2	70	21.2	16.7	17.1
15	1N6377	ICTE-15/MPTE-15	17.6	1	2	60	25	20.1	20.6
15	***1N6385***	ICTE-15C/MPTE-15C	17.6	1	2	60	25	20.8	21.4
18	1N6378	ICTE-18/MPTE-18	21.2	1	2	50	30	24.2	25.2
18	1N6386	ICTE-18C/MPTE-18C	21.2	1	2	50	30	24.8	25.5
22	1N6379	ICTE-22/MPTE-22	25.9	1	2	40	37.5	29.8	32
22	1N6387	ICTE-22C/MPTE-22C	25.9	1	2	40	37.5	30.8	32
36	1N6380	ICTE-36/MPTE-36	42.4	1	2	23	65.2	50.6	54.3
36	1N6388	ICTE-36C/MPTE-36C	42.4	1	2	23	65.2	50.6	54.3
45	1N6381	ICTE-45/MPTE-45	52.9	1	2	19	78.9	63.3	70
45	1N6389	ICTE-45C/MPTE-45C	52.9	1	2	19	78.9	63.3	70

(5) Steady state power dissipation = 5 watts max rating.
(8) 1N6382 thru 1N6389 and C suffix ICTE/MPTE device types are bidirectional. Have cathode polarity band on each end. All other device types are unidirectional only. (Consult factory for availability)
(9) Clamping voltage peak pulse currents for 1N5908 are 30 Amps and 60 Amps.

Devices listed in bold, italic are Motorola preferred devices.

TVS (continued)

Table 7 — Peak Power Dissipation[5] — *1500 Watts* @ 1 ms Surge (Figure 1) — Case 41A-02

ELECTRICAL CHARACTERISTICS (T_A = 25°C unless otherwise noted) V_F = 3.5 V Max, I_F = 100 A Pulse

Breakdown Voltage[6] V_{BR} Volts Nom	Breakdown Voltage[6] @ I_T Pulse (mA)	JEDEC Device	Device[10, 11]	Working Peak Reverse Voltage V_{RWM} (Volts)	Maximum Reverse Leakage @ V_{RWM} I_R (μA)	Maximum Reverse Surge Current Figure 1 I_{RSM} (Amps)	Maximum Reverse Voltage @ I_{RSM} (Clamping Voltage) V_{RSM} (Volts)
6.8	10	1N6267	1.5KE6.8	5.5	1000	139	10.8
6.8	10	***1N6267A***	1.5KE6.8A	5.8	1000	143	10.5
7.5	10	1N6268	1.5KE7.5	6.05	500	128	11.7
7.5	10	1N6268A	1.5KE7.5A	6.4	500	132	11.3
8.2	10	1N6269	1.5KE8.2	6.63	200	120	12.5
8.2	10	1N6269A	1.5KE8.2A	7.02	200	124	12.1
9.1	1	1N6270	1.5KE9.1	7.37	50	109	13.8
9.1	1	1N6270A	1.5KE9.1A	7.78	50	112	13.4
10	1	1N6271	1.5KE10	8.1	10	100	15
10	1	1N6271A	1.5KE10A	8.55	10	103	14.5
11	1	1N6272	1.5KE11	8.92	5	93	16.2
11	1	1N6272A	1.5KE11A	9.4	5	96	15.6
12	1	1N6273	1.5KE12	9.72	5	87	17.3
12	1	1N6273A	1.5KE12A	10.2	5	90	16.7
13	1	1N6274	1.5KE13	10.5	5	79	19
13	1	1N6274A	1.5KE13A	11.1	5	82	18.2
15	1	1N6275	1.5KE15	12.1	5	68	22
15	1	1N6275A	1.5KE15A	12.8	5	71	21.2
16	1	1N6276	1.5KE16	12.9	5	64	23.5
16	1	1N6276A	1.5KE16A	13.6	5	67	22.5
18	1	1N6277	1.5KE18	14.5	5	56.5	26.5
18	1	1N6277A	1.5KE18A	15.3	5	59.5	25.2
20	1	1N6278	1.5KE20	16.2	5	51.5	29.1
20	1	1N6278A	1.5KE20A	17.1	5	54	27.7
22	1	1N6279	1.5KE22	17.8	5	47	31.9
22	1	1N6279A	1.5KE22A	18.8	5	49	30.6
24	1	1N6280	1.5KE24	19.4	5	43	34.7
24	1	***1N6280A***	1.5KE24A	20.5	5	45	33.2
27	1	1N6281	1.5KE27	21.8	5	38.5	39.1
27	1	1N6281A	1.5KE27A	23.1	5	40	37.5
30	1	1N6282	1.5KE30	24.3	5	34.5	43.5
30	1	***1N6282A***	1.5KE30A	25.6	5	36	41.4
33	1	1N6283	1.5KE33	26.8	5	31.5	47.7
33	1	***1N6283A***	1.5KE33A	28.2	5	33	45.7
36	1	1N6284	1.5KE36	29.1	5	29	52
36	1	***1N6284A***	1.5KE36A	30.8	5	30	49.9
39	1	1N6285	1.5KE39	31.6	5	26.5	56.4
39	1	1N6285A	1.5KE39A	33.3	5	28	53.9
43	1	1N6286	1.5KE43	34.8	5	24	61.9
43	1	1N6286A	1.5KE43A	36.8	5	25.3	59.3
47	1	1N6287	1.5KE47	38.1	5	22.2	67.8
47	1	1N6287A	1.5KE47A	40.2	5	23.2	64.8
51	1	1N6288	1.5KE51	41.3	5	20.4	73.5
51	1	***1N6288A***	1.5KE51A	43.6	5	21.4	70.1

(continued)

CASE 41A-02
PLASTIC
Cathode = Polarity Band

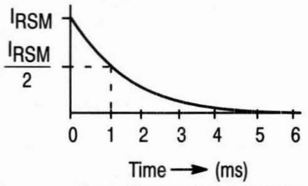

Figure 1

(5) Steady state power dissipation = 5 watts max rating.
(6) Breakdown voltage tolerance is ±10% for no suffix and ±5% for A suffix.
(10) For bidirectional types use C or CA suffix on 1.5KE series only. ***1.5KE10CA, 1.5KE12CA, 1.5KE18CA*** and **1.5KE36CA** are Motorola preferred devices. Have cathode polarity band on each end. (Consult factory for availability) 1N6267-6303A series do not have C or CA option since C and CA are not included in EIA Registration.
(11) UL recognition for classification of protectors (QVGV2) under the UL standard for safety 497B for 1.5KE6.8,A,C,CA thru 1.5KE250,A,C,CA.

Devices listed in bold, italic are Motorola preferred devices.

Axial Leaded for Thru-hole Designs (continued)

Table 7 — Peak Power Dissipation(5) — *1500 Watts* @ 1 ms Surge (Figure 1) — Case 41A-02 (continued)

ELECTRICAL CHARACTERISTICS — continued (T_A = 25°C unless otherwise noted) V_F = 3.5 V Max, I_F = 100 A Pulse

Breakdown Voltage(6) V_{BR} Volts Nom	@ I_T Pulse (mA)	JEDEC Device	Device(10, 11)	Working Peak Reverse Voltage V_{RWM} (Volts)	Maximum Reverse Leakage @ V_{RWM} I_R (μA)	Maximum Reverse Surge Current Figure 1 I_{RSM} (Amps)	Maximum Reverse Voltage @ I_{RSM} (Clamping Voltage) V_{RSM} (Volts)
56	1	1N6289	1.5KE56	45.4	5	18.6	80.5
56	1	1N6289A	1.5KE56A	47.8	5	19.5	77
62	1	1N6290	1.5KE62	50.2	5	16.9	89
62	1	***1N6290A***	1.5KE62A	53	5	17.7	85
68	1	1N6291	1.5KE68	55.1	5	15.3	98
68	1	1N6291A	1.5KE68A	58.1	5	16.3	92
75	1	1N6292	1.5KE75	60.7	5	13.9	108
75	1	1N6292A	1.5KE75A	64.1	5	14.6	103
82	1	1N6293	1.5KE82	66.4	5	12.7	118
82	1	1N6293A	1.5KE82A	70.1	5	13.3	113
91	1	1N6294	1.5KE91	73.7	5	11.4	131
91	1	1N6294A	1.5KE91A	77.8	5	12	125
100	1	1N6295	1.5KE100	81	5	10.4	144
100	1	1N6295A	1.5KE100A	85.5	5	11	137
110	1	1N6296	1.5KE110	89.2	5	9.5	158
110	1	1N6296A	1.5KE110A	94	5	9.9	152
120	1	1N6297	1.5KE120	97.2	5	8.7	173
120	1	1N6297A	1.5KE120A	102	5	9.1	165
130	1	1N6298	1.5KE130	105	5	8	187
130	1	1N6298A	1.5KE130A	111	5	8.4	179
150	1	1N6299	1.5KE150	121	5	7	215
150	1	1N6299A	1.5KE150A	128	5	7.2	207
160	1	1N6300	1.5KE160	130	5	6.5	230
160	1	1N6300A	1.5KE160A	136	5	6.8	219
170	1	1N6301	1.5KE170	138	5	6.2	244
170	1	1N6301A	1.5KE170A	145	5	6.4	234
180	1	1N6302	1.5KE180	146	5	5.8	258
180	1	1N6302A	1.5KE180A	154	5	6.1	246
200	1	1N6303	1.5KE200	162	5	5.2	287
200	1	1N6303A	1.5KE200A	171	5	5.5	274
220	1		1.5KE220	175	5	4.3	344
220	1		1.5KE220A	185	5	4.6	328
250	1		1.5KE250	202	5	5	360
250	1		1.5KE250A	214	5	5	344

(5) Steady state power dissipation = 5 watts max rating.
(6) Breakdown voltage tolerance is ±10% for no suffix and ±5% for A suffix.
(10) For bidirectional types use C or CA suffix on 1.5KE series only. Have cathode polarity band on each end. (Consult factory for availability) 1N6267-6303A series do not have C or CA option since C and CA are not included in EIA Registration.
(11) UL recognition for classification of protectors (QVGV2) under the UL standard for safety 497B for 1.5KE6.8,A,C,CA thru 1.5KE250,A,C,CA.

Devices listed in bold, italic are Motorola preferred devices.

TVS (continued)

Surface Mount Packages

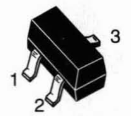

CASE 318-07, STYLE 9
TO-236AB
LOW PROFILE SOT-23
PLASTIC

Pinout: Terminal 1 — Anode
Terminal 2 — Anode
Terminal 3 — Cathode

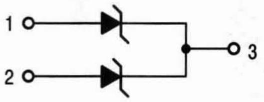

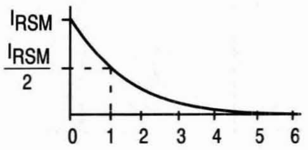

Figure 1

Table 8 — Peak Power Dissipation — *40 Watts* @ 1 ms Surge (Figure 1) — Case 318-07
MMBZ15VDLT1(12) — SOT-23 Bipolar (for ESD protection)

ELECTRICAL CHARACTERISTICS (T_A = 25°C unless otherwise noted)
BIDIRECTIONAL (Circuit tied to pins 1 and 2)

Breakdown Voltage V_{BR}(14) (Volts)				Working Peak Reverse Voltage V_{RWM} (Volts)	Maximum Reverse Leakage Current I_{RWM} I_R (nA)	Maximum Reverse Surge Current I_{RSM}(13) (Amps)	Maximum Reverse Voltage @ I_{RSM}(13) (Clamping Voltage) V_{RSM} (Volts)	Maximum Temperature Coefficient of V_{BR} (mV/°C)
Min	Nom	Max	@ I_T (mA)					
14.3	15	15.8	1.0	12.8	100	1.9	21.2	12

(12) T1 suffix designates tape and reel of 3000 units.
(13) Surge current waveform per Figure 1.
(14) V_{BR} measured at pulse test current I_T at an ambient temperature of 25°C.

Devices listed in bold, italic are Motorola preferred devices.

Surface Mount Packages (continued)

Table 9 — Peak Power Dissipation — *600 WATTS* @ 1 ms Surge (Figure 1) — Case 403A-03

ELECTRICAL CHARACTERISTICS (T_A = 25°C unless otherwise noted).

Reverse Stand-Off Voltage V_R Volts(15)	Device(16)	Breakdown Voltage V_{BR} @ I_T Volts Min	Pulse mA	Maximum Clamping Voltage V_C @ I_{pp} Volts	Peak Pulse Current (See Figure 1) I_{pp} Amps	Maximum Reverse Leakage @ V_R I_R µA	Device Marking
5	1SMB5.0AT3	6.4	10	9.2	65.2	800	KE
6	1SMB6.0AT3	6.67	10	10.3	58.3	800	KG
6.5	1SMB6.5AT3	7.22	10	11.2	53.6	500	KK
7	1SMB7.0AT3	7.78	10	12	50	200	KM
7.5	1SMB7.5AT3	8.33	1	12.9	46.5	100	KP
8	1SMB8.0AT3	8.89	1	13.6	44.1	50	KR
8.5	1SMB8.5AT3	9.44	1	14.4	41.7	10	KT
9	1SMB9.0AT3	10	1	15.4	39	5	KV
10	1SMB10AT3	11.1	1	17	35.3	5	KX
11	1SMB11AT3	12.2	1	18.2	33	5	KZ
12	1SMB12AT3	13.3	1	19.9	30.2	5	LE
13	1SMB13AT3	14.4	1	21.5	27.9	5	LG
14	1SMB14AT3	15.6	1	23.2	25.8	5	LK
15	1SMB15AT3	16.7	1	24.4	24	5	LM
16	1SMB16AT3	17.8	1	26	23.1	5	LP
17	1SMB17AT3	18.9	1	27.6	21.7	5	LR
18	1SMB18AT3	20	1	29.2	20.5	5	LT
20	1SMB20AT3	22.2	1	32.4	18.5	5	LV
22	1SMB22AT3	24.4	1	35.5	16.9	5	LX
24	1SMB24AT3	26.7	1	38.9	15.4	5	LZ
26	1SMB26AT3	28.9	1	42.1	14.2	5	ME
28	1SMB28AT3	31.1	1	45.4	13.2	5	MG
30	1SMB30AT3	33.3	1	48.4	12.4	5	MK
33	1SMB33AT3	36.7	1	53.3	11.3	5	MM
36	1SMB36AT3	40	1	58.1	10.3	5	MP
40	1SMB40AT3	44.4	1	64.5	9.3	5	MR
43	1SMB43AT3	47.8	1	69.4	8.6	5	MT
45	1SMB45AT3	50	1	72.7	8.3	5	MV
48	1SMB48AT3	53.3	1	77.4	7.7	5	MX
51	1SMB51AT3	56.7	1	82.4	7.3	5	MZ
54	1SMB54AT3	60	1	87.1	6.9	5	NE
58	1SMB58AT3	64.4	1	93.6	6.4	5	NG
60	1SMB60AT3	66.7	1	96.8	6.2	5	NK
64	1SMB64AT3	71.1	1	103	5.8	5	NM
70	1SMB70AT3	77.8	1	113	5.3	5	NP
75	1SMB75AT3	83.3	1	121	4.9	5	NR
78	1SMB78AT3	86.7	1	126	4.7	5	NT
85	1SMB85AT3	94.4	1	137	4.4	5	NV
90	1SMB90AT3	100	1	146	4.1	5	NX
100	1SMB100AT3	111	1	162	3.7	5	NZ
110	1SMB110AT3	122	1	177	3.4	5	PE
120	1SMB120AT3	133	1	193	3.1	5	PG
130	1SMB130AT3	144	1	209	2.9	5	PK
150	1SMB150AT3	167	1	243	2.5	5	PM
160	1SMB160AT3	178	1	259	2.3	5	PP
170	1SMB170AT3	189	1	275	2.2	5	PR

(15) A transient suppressor is normally selected according to the reverse "Stand Off Voltage" (V_R) which should be equal to or greater than the DC or continuous peak operating voltage level.
(16) T3 suffix designates tape and reel of 2500 units.

Devices listed in bold, italic are Motorola preferred devices.

SMB
CASE 403A-03
PLASTIC
Cathode = Notch

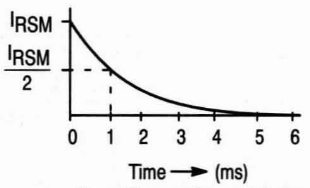

Figure 1

TVS (continued)

Table 10 — Peak Power Dissipation — *600 WATTS* @ 1 ms Surge (Figure 1) — Case 403A-03

ELECTRICAL CHARACTERISTICS (T_A = 25°C unless otherwise noted) V_F = 3.5 V Max, I_F = 50 A Pulse.

Breakdown Voltage(17) V_{BR} @ I_T Pulse Volts Nom	mA	Device(16)	Working Peak Reverse Voltage V_{RWM} Volts	Maximum Reverse Leakage @ V_{RWM} I_R (μA)	Maximum Reverse Surge Current Figure 1 I_{RSM} (Amps)	Maximum Reverse Voltage @ I_{RSM} (Clamping Voltage) V_{RSM} (Volts)	Device Marking
6.8	10	P6SMB6.8AT3	5.8	1000	57	10.5	6V8A
7.5	10	P6SMB7.5AT3	6.4	500	53	11.3	7V5A
8.2	10	P6SMB8.2AT3	7.02	200	50	12.1	8V2A
9.1	1	P6SMB9.1AT3	7.78	50	45	13.4	9V1A
10	1	P6SMB10AT3	8.55	10	41	14.5	10A
11	1	P6SMB11AT3	9.4	5	38	15.6	11A
12	1	P6SMB12AT3	10.2	5	36	16.7	12A
13	1	***P6SMB13AT3***	11.1	5	33	18.2	13A
15	1	***P6SMB15AT3***	12.8	5	28	21.2	15A
16	1	P6SMB16AT3	13.6	5	27	22.5	16A
18	1	P6SMB18AT3	15.3	5	24	25.2	18A
20	1	P6SMB20AT3	17.1	5	22	27.7	20A
22	1	P6SMB22AT3	18.8	5	20	30.6	22A
24	1	P6SMB24AT3	20.5	5	18	33.2	24A
27	1	***P6SMB27AT3***	23.1	5	16	37.5	27A
30	1	***P6SMB30AT3***	25.6	5	14.4	41.4	30A
33	1	***P6SMB33AT3***	28.2	5	13.2	45.7	33A
36	1	***P6SMB36AT3***	30.8	5	12	49.9	36A
39	1	P6SMB39AT3	33.3	5	11.2	53.9	39A
43	1	P6SMB43AT3	36.8	5	10.1	59.3	43A
47	1	P6SMB47AT3	40.2	5	9.3	64.8	47A
51	1	***P6SMB51AT3***	43.6	5	8.6	70.1	51A
56	1	P6SMB56AT3	47.8	5	7.8	77	56A
62	1	***P6SMB62AT3***	53	5	7.1	85	62A
68	1	P6SMB68AT3	58.1	5	6.5	92	68A
75	1	P6SMB75AT3	64.1	5	5.8	103	75A
82	1	P6SMB82AT3	70.1	5	5.3	113	82A
91	1	P6SMB91AT3	77.8	5	4.8	125	91A
100	1	P6SMB100AT3	85.5	5	4.4	137	100A
110	1	P6SMB110AT3	94	5	4	152	110A
120	1	P6SMB120AT3	102	5	3.6	165	120A
130	1	P6SMB130AT3	111	5	3.3	179	130A
150	1	P6SMB150AT3	128	5	2.9	207	150A
160	1	P6SMB160AT3	136	5	2.7	219	160A
170	1	P6SMB170AT3	145	5	2.6	234	170A
180	1	P6SMB180AT3	154	5	2.4	246	180A
200	1	P6SMB200AT3	171	5	2.2	274	200A

(16) T3 suffix designates tape and reel of 2500 units.
(17) Breakdown voltage tolerance is ±5% for A suffix.

Devices listed in bold, italic are Motorola preferred devices.

SMB
CASE 403A-03
PLASTIC
Cathode = Notch

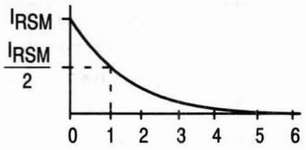

Surge Current Characteristics

Figure 1

Surface Mount Packages (continued)

Table 11 — Peak Power Dissipation — *1500 WATTS* @ 1 ms Surge (Figure 1) — Case 403-03

ELECTRICAL CHARACTERISTICS (T_A = 25°C unless otherwise noted)

Reverse Stand-Off V_R Volts(15)	Device(16)	Breakdown Voltage V_{BR} @ I_T Volts Min	Breakdown Voltage V_{BR} @ I_T Pulse mA	Maximum Clamping Voltage V_C @ I_{pp} Volts	Peak Pulse Current (See Figure 1) I_{pp} Amps	Maximum Reverse Leakage @ V_R I_R µA	Device Marking
5	1SMC5.0AT3	6.4	10	9.2	163	1000	GDE
6	1SMC6.0AT3	6.67	10	10.3	145.6	1000	GDG
6.5	1SMC6.5AT3	7.22	10	11.2	133.9	500	GDK
7	1SMC7.0AT3	7.78	10	12	125	200	GDM
7.5	1SMC7.5AT3	8.33	1	12.9	116.3	100	GDP
8	1SMC8.0AT3	8.89	1	13.6	110.3	50	GDR
8.5	1SMC8.5AT3	9.44	1	14.4	104.2	20	GDT
9	1SMC9.0AT3	10	1	15.4	97.4	10	GDV
10	1SMC10AT3	11.1	1	17	88.2	5	GDX
11	1SMC11AT3	12.2	1	18.2	82.4	5	GDZ
12	1SMC12AT3	13.3	1	19.9	75.3	5	GEE
13	1SMC13AT3	14.4	1	21.5	69.7	5	GEG
14	1SMC14AT3	15.6	1	23.2	64.7	5	GEK
15	1SMC15AT3	16.7	1	24.4	61.5	5	GEM
16	1SMC16AT3	17.8	1	26	57.7	5	GEP
17	1SMC17AT3	18.9	1	27.6	53.3	5	GER
18	1SMC18AT3	20	1	29.2	51.4	5	GET
20	1SMC20AT3	22.2	1	32.4	46.3	5	GEV
22	1SMC22AT3	24.4	1	35.5	42.2	5	GEX
24	1SMC24AT3	26.7	1	38.9	38.6	5	GEZ
26	1SMC26AT3	28.9	1	42.1	35.6	5	GFE
28	1SMC28AT3	31.1	1	45.4	33	5	GFG
30	1SMC30AT3	33.3	1	48.4	31	5	GFK
33	1SMC33AT3	36.7	1	53.3	28.1	5	GFM
36	1SMC36AT3	40	1	58.1	25.8	5	GFP
40	1SMC40AT3	44.4	1	64.5	23.2	5	GFR
43	1SMC43AT3	47.8	1	69.4	21.6	5	GFT
45	1SMC45AT3	50	1	72.7	20.6	5	GFV
48	1SMC48AT3	53.3	1	77.4	19.4	5	GFX
51	1SMC51AT3	56.7	1	82.4	18.2	5	GFZ
54	1SMC54AT3	60	1	87.1	17.2	5	GGE
58	1SMC58AT3	64.4	1	93.6	16	5	GGG
60	1SMC60AT3	66.7	1	96.8	15.5	5	GGK
64	1SMC64AT3	71.1	1	103	14.6	5	GGM
70	1SMC70AT3	77.8	1	113	13.3	5	GGP
75	1SMC75AT3	83.3	1	121	12.4	5	GGR
78	1SMC78AT3	86.7	1	126	11.4	5	GGT

(15) A transient suppressor is normally selected according to the reverse "Stand Off Voltage" (V_R) which should be equal to or greater than the DC or continuous peak operating voltage level.
(16) T3 suffix designates tape and reel of 2500 units.

Devices listed in bold, italic are Motorola preferred devices.

SMC
CASE 403-03
PLASTIC
Cathode = Notch

Surge Current Characteristics

Figure 1

Surface Mount Packages (continued)

Table 12 — Peak Power Dissipation — *1500 Watts* @ 1 ms Surge (Figure 1) — Case 403-03

ELECTRICAL CHARACTERISTICS (T_A = 25°C unless otherwise noted) V_F = 3.5 V Max, I_F = 100 A Pulse.

Breakdown Voltage[17] V_{BR} @ I_T Pulse Volts Nom	mA	Device[16]	Working Peak Reverse Voltage V_{RWM} Volts	Maximum Reverse Leakage @ V_{RWM} I_R (μA)	Maximum Reverse Surge Current Figure 1 I_{RSM} (Amps)	Maximum Reverse Voltage @ I_{RSM} (Clamping Voltage) V_{RSM} (Volts)	Device Marking
6.8	10	1.5SMC6.8AT3	5.8	1000	143	10.5	6V8A
7.5	10	1.5SMC7.5AT3	6.4	500	132	11.3	7V5A
8.2	10	1.5SMC8.2AT3	7.02	200	124	12.1	8V2A
9.1	1	1.5SMC9.1AT3	7.78	50	112	13.4	9V1A
10	1	1.5SMC10AT3	8.55	10	103	14.5	10A
11	1	1.5SMC11AT3	9.4	5	96	15.6	11A
12	1	1.5SMC12AT3	10.2	5	90	16.7	12A
13	1	1.5SMC13AT3	11.1	5	82	18.2	13A
15	1	1.5SMC15AT3	12.8	5	71	21.2	15A
16	1	1.5SMC16AT3	13.6	5	67	22.5	16A
18	1	1.5SMC18AT3	15.3	5	59.5	25.2	18A
20	1	1.5SMC20AT3	17.1	5	54	27.7	20A
22	1	1.5SMC22AT3	18.8	5	49	30.6	22A
24	1	1.5SMC24AT3	20.5	5	45	33.2	24A
27	1	1.5SMC27AT3	23.1	5	40	37.5	27A
30	1	1.5SMC30AT3	25.6	5	36	41.4	30A
33	1	1.5SMC33AT3	28.2	5	33	45.7	33A
36	1	***1.5SMC36AT3***	30.8	5	30	49.9	36A
39	1	1.5SMC39AT3	33.3	5	28	53.9	39A
43	1	1.5SMC43AT3	36.8	5	25.3	59.3	43A
47	1	1.5SMC47AT3	40.2	5	23.2	64.8	47A
51	1	1.5SMC51AT3	43.6	5	21.4	70.1	51A
56	1	***1.5SMC56AT3***	47.8	5	19.5	77	56A
62	1	***1.5SMC62AT3***	53	5	17.7	85	62A
68	1	1.5SMC68AT3	58.1	5	16.3	92	68A
75	1	1.5SMC75AT3	64.1	5	14.6	103	75A
82	1	1.5SMC82AT3	70.1	5	13.3	113	82A
91	1	1.5SMC91AT3	77.8	5	12	125	91A

(16) T3 suffix designates tape and reel of 2500 units.
(17) Breakdown voltage tolerance is ±5% for A suffix.

Devices listed in bold, italic are Motorola preferred devices.

SMC
CASE 403-03
PLASTIC
Cathode = Notch

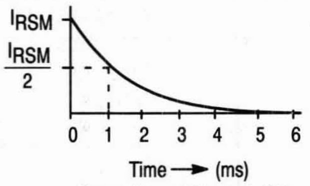

Surge Current Characteristics

Figure 1

Automotive Transient Suppressors

Automotive transient suppressors are designed for protection against over-voltage conditions in the auto electrical system including the “LOAD DUMP” phenomenon that occurs when the battery open circuits while the car is running.

AUTOMOTIVE TRANSIENT SUPPRESSOR	
	CASE 194-04 ***MR2535L*** (19)
V_{RRM} (Volts)	20
I_O (Amp)	35
$V_{(BR)}$ (Volts)	24–32
I_{RSM}(18) (Amp)	110
T_C @ Rated I_O (°C)	150
T (°C)	175

(18) Time constant = 10 ms, duty cycle ≤ 1%, T_C = 25°C.
(19) MR2535L is considered part of the rectifier product portfolio.

Devices listed in bold, italic are Motorola preferred devices.

CASE 194-04

Power Transistor Products

In Brief . . .

Motorola's power transistor products include not only the wide range of specifications associated with bipolar and field-effect (TMOS®) transistors, the two primary discrete transistor categories, but enhance these capabilities with multiple-device structures to meet even greater gain, voltage, current and power requirements. In addition, the emerging field of SMARTDISCRETES™ products offer the advantages of a power MOS device with on-chip protective circuitry. The Motorola power products line offers the following choices and options:

Discrete Power Transistors

- Bipolar and TMOS
- Metal and Plastic Packaging
- Unpackaged "Chips" for Hybrid Assemblies
- Virtually Unlimited Choice of Specifications

Power Modules

- Single and Multiple Darlington and Tri-Stage Structures with rating to 300 A and 1200 V.

SMARTDISCRETES Products

- Automotive, Industrial, and other general purpose applications

Page

TMOS Power MOSFET Numbering System 5.3-2

TMOS Power MOSFETs 5.3-3

Plastic Packages 5.3-3

Metal Packages 5.3-6

Logic-Level MOSFETs 5.3-7

SENSEFETs 5.3-7

Surface Mount Products 5.3-8

Multiple Chip Products 5.3-10

SMARTDISCRETES Products 5.3-12

MOSFET Turn-Off Devices 5.3-13

Bipolar Power Transistors

Plastic Packages 5.3-16

Surface Mount 5.3-25

Metal Packages 5.3-26

Audio 5.3-34

CRT Deflection 5.3-35

Power Modules 5.3-37

TMOS Power MOSFET Numbering System

Wherever possible, Motorola has tried to use the following numbering systems for TMOS power MOSFET products.

MTP10N10M

MOTOROLA — M

TMOS — T
(T FOR TMOS, G FOR IGBT)

PACKAGE TYPE — P
- **P FOR PLASTIC TO-220**
- **M FOR METAL TO-204 (TO-3)**
- **D FOR DPAK**
- **A FOR TO-220 ISOLATED**
- **W FOR TO-247**
- **B FOR D^2PAK**

CURRENT — 10

CHANNEL POLARITY, N OR P — N

VOLTAGE RATING DIVIDED BY 10 — 10

OPTIONAL SUFFIX: — M
- **M FOR SENSEFET**
- **L FOR LOGIC LEVEL**
- **E FOR ENERGY RATED**
- **(-)1 FOR INSERTION DPAK/D^2PAK***
- **T4 FOR TAPE & REEL DPAK/D^2PAK**

* Add "1" to device titles ending with a letter.
Add "-1" to device titles ending with a numeral.

Selection by Package

TMOS®

The product listed in the TMOS Power MOSFETs section of this Selection Guide have been compiled on an IBM, IBM compatible or Macintosh computer disk for quick selection of product. This versatile disk may be obtained by contacting a Motorola sales office in your area or by contacting a Motorola Literature Distribution Center listed in the back. Order the disk by requesting DK101/D for an IBM disk or DK201/D for a Macintosh disk.

Plastic Packages — TO-220AB

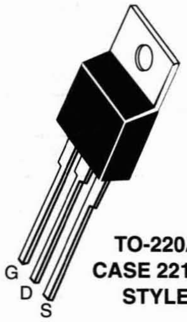

TO-220AB
CASE 221A-06
STYLE 5

Table 1 — P-Channel

V_{DSS} (Volts) Min	$R_{DS(on)}$ (Ohms) Max	I_D @ (Amps)	Device	I_D (cont) Amps	P_D(1) (Watts) Max
500	6	1	***MTP2P50***	2	75
450			MTP2P45		
250	3	2.5	***MTP5P25***	5	
200	1	3	***MTP6P20E***	6	
	0.7	4	***MTP8P20***	8	
100	0.4		MTP8P10		60
	0.3	6	***MTP12P10***	12	88
60	0.6	3.5	MTP7P06	7	75
	0.3	6	***MTP2955***	12	
			MTP12P06		
	0.12	11.5	***MTP23P06***	23	125

(1) $T_C = 25°C$

Table 2 — N-Channel

V_{DSS} (Volts) Min	$R_{DS(on)}$ (Ohms) Max	I_D @ (Amps)	Device	I_D (cont) Amps	P_D(1) (Watts) Max
1000	4	1.5	MTP3N100E	3	75
800	3	2	***MTP4N80E***	4	
600	12	0.5	MTP1N60	1	
	3.8	1	***MTP2N60E***	2	50
	2.2	1.5	***MTP3N60E***	3	75
	1.2	3	***MTP6N60E***	6	125
500	8	0.5	MTP1N50	1	75
	3	1.5	IRF820	2.5	40
			MTP3N50E	3	50
	1.5		IRF830	4.5	75
		2	***MTP4N50E***	4	
	0.85	4	IRF840	8	125
	0.8		***MTP8N50E***		
400	1.8	1.5	IRF720	3	40
		2	***MTP4N40E***	4	50
	1	3	IRF730	4.5	75
		2.5	***MTP5N40E***	5	
	0.55	5	IRF740	10	125
			MTP10N40E		

(1) $T_C = 25°C$

Devices listed in bold, italic are Motorola preferred devices.

TMOS

Plastic Packages — TO-220AB (continued)

Table 2 — N-Channel — continued

V_{DSS} (Volts) Min	$R_{DS(on)}$ (Ohms) Max	@ I_D (Amps)	Device	I_D (cont) Amps	P_D(1) (Watts) Max
250	0.45	5	MTP10N25	10	100
200	1.8	1	MTP2N20	2	50
	1.5	1.3	IRF610	2.5	20
	1		MTP5N20	5	75
	0.8		IRF620		40
	0.7	3.5	MTP7N20	7	75
	0.4	3	IRF630	9	
		4	MTP8N20	8	
	0.35	6	MTP12N20	12	100
	0.18	10	IRF640	18	125
	0.15		***MTP20N20E***	20	
150	0.3	5	MTP10N15	10	75
	0.25	7.5	MTP15N15	15	100
100	0.8	3	MTP6N10	6	50
	0.6	2	IRF510	4	20
	0.27	5	IRF520	8	40
	0.25		***MTP10N10E***	10	75
	0.16	7	IRF530	14	
		6	***MTP12N10E***	12	

(1) T_C = 25°C

Devices listed in bold, italic are Motorola preferred devices.

V_{DSS} (Volts) Min	$R_{DS(on)}$ (Ohms) Max	@ I_D (Amps)	Device	I_D (cont) Amps	P_D(1) (Watts) Max
100	0.077	14	IRF540	28	125
	0.058	16.5	***MTP33N10E***	33	150
60	0.15	6	***MTP3055E***	12	40
	0.12	7.5	***MTP15N06E***	15	75
	0.085	10	MTP20N06	20	
	0.04	18	***MTP36N06E***	36	
	0.028	25	IRFZ44	50	150
	0.025		***MTP50N06E***		
50	0.12	6	BUZ71A	12	40
			MTP12N05E		
			IRFZ22	14	
	0.1		BUZ71	12	
		7.5	***MTP15N05E***	15	
			IRFZ20		
	0.06	15	BUZ11A	25	75
	0.04		BUZ11	30	
	0.028	25	***MTP50N05E***	50	150

(1) T_C = 25°C

TMOS®

Isolated Plastic Packages — Isolated TO-220
Isolated Mounting Hole — Isolated TO-247

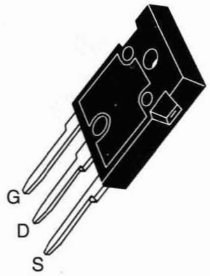

TO-247
CASE 340F-03
(MTW PREFIX)
STYLE 1

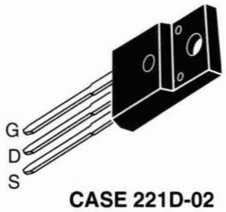

CASE 221D-02
ISOLATED TO-220
(MTA PREFIX)
STYLE 1

Table 3 — N-Channel TO-247

V_{DSS} (Volts) Min	$R_{DS(on)}$ (Ohms) Max @	I_D (Amps)	Device	I_D (cont) Amps	P_D(1) (Watts) Max
1000	2	3	MTW6N100E(7)	6	180
	1.2	5	MTW10N100E(7)	10	250
800	3	2	***MTW4N80E***	4	150
	1.2	3.5	***MTW7N80E***	7	180
600	1.2	3	***MTW6N60E***	6	150
	0.5	4	***MTW8N60E***	8	180
500	0.8		***MTW8N50E***		150
	0.4	7	***MTW14N50E***	14	180
	0.27	10	***MTW20N50E***	20	250
400	0.55	5	***MTW10N40E***	10	150
	0.3	8	***MTW16N40E***	16	180
	0.2	12	***MTW24N40E***	24	250
250	0.28	7.5	***MTW15N25E***	15	150
	0.14	11.5	***MTW23N25E***	23	180
	0.1	16	***MTW32N25E***	32	250
200	0.15	11	***MTW22N20E***	22	150
	0.085	16	***MTW32N20E***	32	180
150	0.095	13	***MTW26N15E***	26	150
	0.065	17.5	***MTW35N15E***	35	180
100	0.058	18	***MTW36N10E***	36	150
	0.04	22.5	***MTW45N10E***	45	180
50	0.014	27	***MTW54N05E***	54	210

(1) $T_C = 25°C$
(7) To be introduced.

Devices listed in bold, italic are Motorola preferred devices.

Table 4 — N- and P-Channel — Fully Isolated TO-220 ЯU

These devices eliminate the need for isolation hardware which in turn reduces assembly costs and improves reliability.

V_{DSS} (Volts) Min	$R_{DS(on)}$ (Ohms) Max @	I_D (Amps)	Device	I_D (cont) Amps	P_D(1) (Watts) Max
600	3.8	1	***MTA1N60E***	1	40
	2.2	1.5	***MTA2N60E***	2	40
	1.2	3	***MTA4N60E***	4	50
500	1.5	2	***MTA4N50E***		40
	0.8	4	***MTA5N50E***	5	50
400	1	2.5	***MTA4N40E***	4	40
	0.55	5	***MTA6N40E***	6	50
100	0.25		***MTA8N10E***	8	35
60	0.3	6	***MTA2955***(2)		40
	0.15		***MTA3055E***	9	30
	0.085	7.5	MTA15N06	15	50
	0.025	25	***MTA30N06E***	30	

(1) $T_C = 25°C$
(2) Indicates P-Channel
ЯU Indicates UL Recognized

Metal Packages — TO-204AA/AE

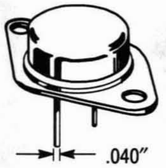

TO-204AA
CASE 1-07
STYLE 3

TO-204AE
CASE 197A-03
STYLE 3

Table 5 — P-Channel

V_{DSS} (Volts) Min	$R_{DS(on)}$ @ (Ohms) Max	I_D (Amps)	Device	I_D (cont) Amps	P_D[1] (Watts) Max
100	0.3	6	MTM12P10	12	75
	0.15	10	MTM20P10	20	125

[1] $T_C = 25°C$

Table 6 — N-Channel

V_{DSS} (Volts) Min	$R_{DS(on)}$ @ (Ohms) Max	I_D (Amps)	Device	I_D (cont) Amps	P_D[1] (Watts) Max
1000	2	3	MTM6N100E	6	150
800	1.4		MTM6N80E		
600	1.2		MTM6N60		
500	4	1	MTM2N50	2	75
	0.85	4	IRF440	8	125
	0.8	3.5	MTM7N50	7	150
	0.4		IRF450	13	
		6.5	***MTM13N50E***	15	
400	1	3	IRP330	5.5	75
		2.5	MTM5N40	5	
	0.55	4	MTM8N40	8	150
	0.3	8	IRF350	15	
		7.5	***MTM15N40E***		
200	0.4	5	IRFZ30	9	75
	0.18	10	IRF240	18	125
	0.16	7.5	MTM15N20	15	150
	0.085	16	IRF250	30	
	0.08	20	MTM40N20	40	250[6]
100	0.16	8	IRF130	14	75
		6	MTM12N10	12	
	0.085	15	IRF140	27	100
	0.075	12.5	***MTM25N10E***	25	150
	0.055	20	IRF150	40	
	0.04	27.5	MTM55N10	55	250[6]
60	0.028	30	MTM60N06	60	250
50		25	MTM50N05E	50	125

[1] $T_C = 25°C$
[6] Indicates .060″ pin diameter

Devices listed in bold, italic are Motorola preferred devices.

Logic Level Power MOSFETs

Logic level MOSFETs are fully enhanced with 5 volts applied to the gate.

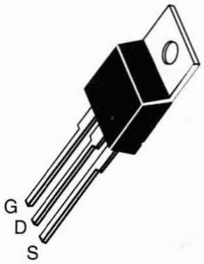

TO-220AB
CASE 221A-06
(MTP PREFIX)
STYLE 5

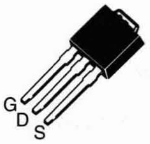

TO-251[4]
CASE 369-06
(MTD PREFIX)
STYLE 2

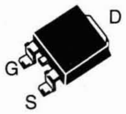

TO-252[5]
CASE 369A-10
(MTD PREFIX)
STYLE 2

Table 7 — N-Channel Logic Level Power MOSFETs (TO-204AA and TO-220AB)

V_{DSS} (Volts) Min	$R_{DS(on)}$ (Ohms) Max	@ I_D (Amps)	Device	I_D (cont) Amps	P_D[1] (Watts) Max	Package
80	0.3	2.5	***MTD5N08L***	5	1.75[3]	TO-252
	0.135	7.5	***MTP15N08EL***	15	75	TO-220AB
60	0.18	6	***MTD3055EL***	10	1.75[3]	TO-251
			MTP3055EL	12	40	TO-220AB
	0.05	15	***MTP30N06EL***	30	75	TO-220AB
	0.028	25	***MTP50N06EL***	50	150	TO-220AB
50	0.1	7.5	***MTP15N05EL***	15	75	TO-220AB

(1) $T_C = 25°C$
(3) Power rating when mounted on an FR-4 glass epoxy printed circuit board with the minimum pad size recommended.
(4) Add -1 Suffix to part number to order insertion mountable package.
(5) Available in tape and reel — add T4 suffix to part number.

TMOS SENSEFETs

SENSEFETs are conventional power MOSFETs with an option provided to sense the drain current by measuring a small proportion of the total drain current. These devices are ideal for current mode switching regulators and motor controls.

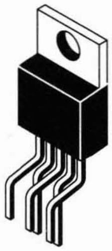

CASE 314B-03
(5 PIN TO-220)
STYLE 1

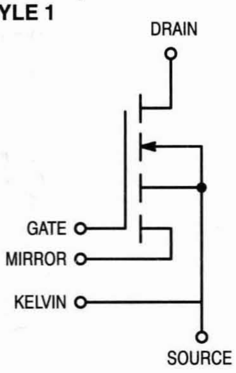

Table 8 — Case 314B-03

V_{DSS} (Volts) Min	$R_{DS(on)}$ (Ohms) Max	@ I_D (Amps)	Device	I_D (cont) Amps	P_D[1] (Watts) Max
60	0.04	20	MTP40N06M	40	125
80	0.065	15	MTP30N08M	30	
100	0.25	5	MTP10N10M	10	75

(1) $T_C = 25°C$

Devices listed in bold, italic are Motorola preferred devices.

Surface Mount Products

TMOS D2PAK

Table 9 — Case 418B-01 Surface Mount
Case 418-01 Insertion Mountable

These devices enable a total system solution for power surface mount applications. They are available in tape and reel and low profile insertion mount.

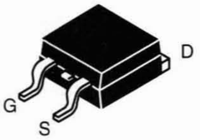

CASE 418B-01(5)
STYLE 2

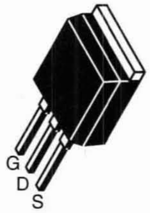

CASE 418-01(4)
STYLE 2

V_{DSS} (Volts) Min	$R_{DS(on)}$ (Ohms) Max	@ I_D (Amps)	Device	I_D (cont) Amps	P_D(1) (Watts) Max
500	0.8	4	***MTB8N50E***	8	2.5(3)
400	0.55	5	***MTB10N40E***	10	
200	0.15	10	***MTB20N20E***	20	
100	0.058	16.5	***MTB33N10E***	33	
60	0.12	11.5	***MTB23P06E***(2)	23	
		7.5	***MTB15N06E***	15	
	0.05	15	***MTB30N06EL***	30	
	0.04	18	***MTB36N06E***	36	
	0.028	25	***MTB50N06EL***	50	
	0.025		***MTB50N06E***		

(1) $T_C = 25°C$
(2) Indicates P-Channel
(3) Power rating when mounted on an FR-4 glass epoxy printed circuit board with the minimum pad size recommended.
(4) Add -1 Suffix to part number to order insertion mountable package.
(5) Available in tape and reel — add T4 suffix to part number.

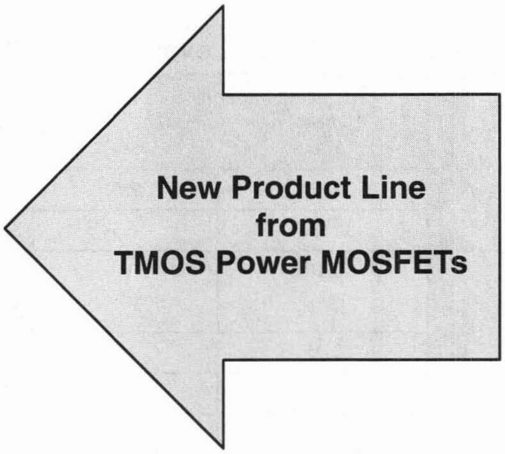

TMOS DPAK

Table 10 — Case 369A-10 Surface Mount
Case 369-06 Insertion Mountable

These devices offer compatibility with automatic pick and place equipment for high density circuit board applications. They are available in tape and reel and insertion mount.

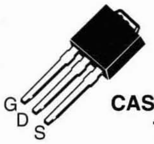

CASE 369-06(4)
TO-251
STYLE 2

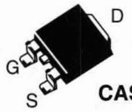

CASE 369A-10(5)
TO-252
STYLE 2

V_{DSS} (Volts) Min	$R_{DS(on)}$ (Ohms) Max	@ I_D (Amps)	Device	I_D (cont) Amps	P_D(1) (Watts) Max
500	6	0.5	MTD1N50	1	1.75(3)
	4	1	MTD2N50	2	
450	8	0.5	MTD1N45	1	
400	5		MTD1N40		
200	1.5	1	MTD2N20	2	
	0.7	2	MTD4N20	4	
150	0.3	3	MTD6N15	6	
100	0.5	2.5	MTD5N10	5	
	0.25	4.5	***MTD9N10E***	9	
		3	MTD6N10	6	

V_{DSS} (Volts) Min	$R_{DS(on)}$ (Ohms) Max	@ I_D (Amps)	Device	I_D (cont) Amps	P_D(1) (Watts) Max
60	0.6	2	***MTD4P06E***(2)	4	1.75(3)
	0.4	2.5	MTD5N06	5	
	0.3	6	***MTD2955E***(2)	8	
	0.18		***MTD3055EL***	10	
	0.15	4	***MTD3055E***	8	
50	0.4	2.5	MTD5N05	5	
	0.1	5	***MTD10N05E***	10	

(1) $T_C = 25°C$
(2) Indicates P-Channel
(3) Power rating when mounted on an FR-4 glass epoxy printed circuit board with the minimum pad size recommended.
(4) Add -1 Suffix to part number to order insertion mountable package.
(5) Available in tape and reel — add T4 suffix to part number.

Devices listed in bold, italic are Motorola preferred devices.

Surface Mount Products (continued)

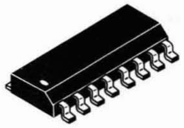

CASE 751B-03
SO-16
STYLE 7

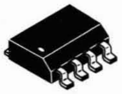

CASE 751-03
SO-8
STYLE 11

TMOS Medium Power MOSFETs

Multiple Chip TMOS Products in SOIC Surface Mount Packages

Multiple chip surface mount TMOS MOSFETs in SOIC packages simplify circuit design through component count and board space reduction. These devices are designed for use in bridge circuits in low voltage, motor control applications such as disk drives, tape drives, optical drives, printers and plotters and they can also be used for driving relays and solenoids. Both devices feature low $R_{DS(on)}$ and a specially designed leadframe for maximum power dissipation. These devices fit the standard SO-8 and SO-16 footprints.

Table 11 — Multiple Chip Products in SOIC

V_{DSS} (Volts) Min	P-Channel $R_{DS(on)}$ Ohms	N-Channel $R_{DS(on)}$ Ohms	Part Number	I_D (cont) Amps	P_D(17) (Watts) Max	Description
50	0.3	0.3	***MMDF3C05***	3.0	1.5(18)	Complementary Half-Bridge
20	—	0.1	***MMDF4N02***	4.0	1.2(18)	Dual N-Channel

(17) $T_A = 25°C$
(18) Power rating with both die "on" when mounted on FR-4 glass epoxy printed circuit board with the recommended footprint

Devices listed in bold, italic are Motorola preferred devices.

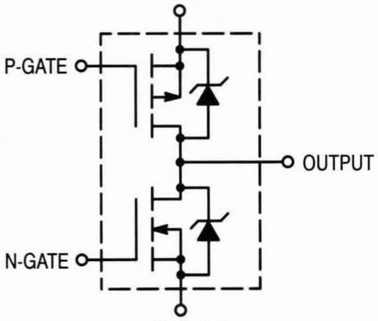

MMDF3C05
Half-Bridge

Use MMDF3C05R1 to order the 7 inch/500 unit reel.
Use MMDF3C05R2 to order the 13 inch/2500 unit reel.

Tape Size = 16 mm

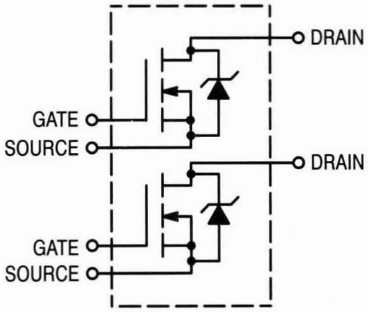

MMDF4N02
Dual N-Channel

Use MMDF4N02R1 to order the 7 inch/500 unit reel.
Use MMDF4N02R2 to order the 13 inch/2500 unit reel.

Tape Size = 12 mm

Medium Power MOSFETs are manufactured and available from the Small-Signal Products Group.

Multiple Chip Products

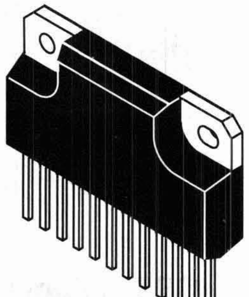

CASE 806-05

The ICePAK™ leadframe is versatile and can be used to construct many different custom or semi-custom circuits — 2 pad (H-bridge), 3 pad (3-phase or tri-die), and 4 pad (quad die). Contact your local Motorola sales office for your copy of the ICePAK Design Guide.

Table 12 — ICePAK Products

V_{DSS} (Volts) Min	P-Channel $R_{DS(on)}$ (Ohms) Max	N-Channel $R_{DS(on)}$ (Ohms) Max	Part Number	I_D (cont) Amps	P_D (1) (Watts) Max	Description
100	0.4	0.15	***MPM3002***	8	62.5	H-Bridge with Current Sensing
60	0.28		***MPM3003***	10		3-Phase Bridge with Complementary Outputs
			MPM3004			H-Bridge
	0.15	0.04	MPM3008 (7)	16		H-Bridge with Schottky Rectifiers
		0.15	MPM3010 (7)	12	50	H-Bridge with Current Sensing
	N.A.	0.04	MPM3013 (7)	25		Quad N-Channel Array

(1) $T_C = 25°C$
(7) To be introduced

Devices listed in bold, italic are Motorola preferred devices.

Multiple Chip Power Module Device Circuits

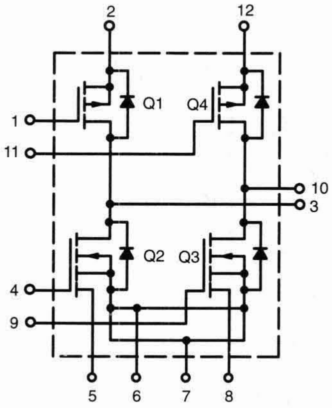

H-Bridge with Current Sensing

MPM3002/MPM3010

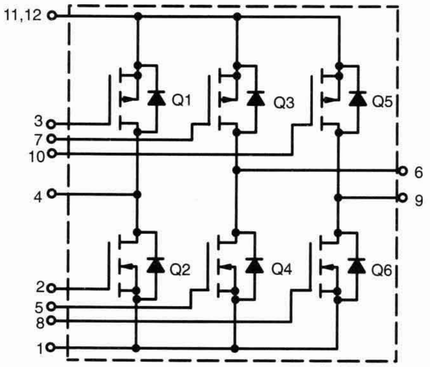

Three-Phase Bridge with Complementary Outputs

MPM3003

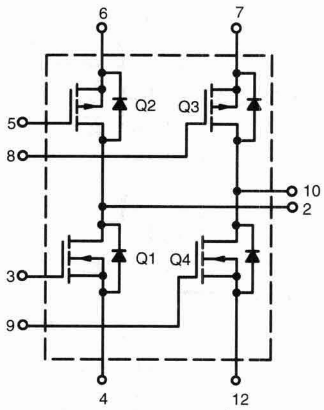

H-Bridge

MPM3004

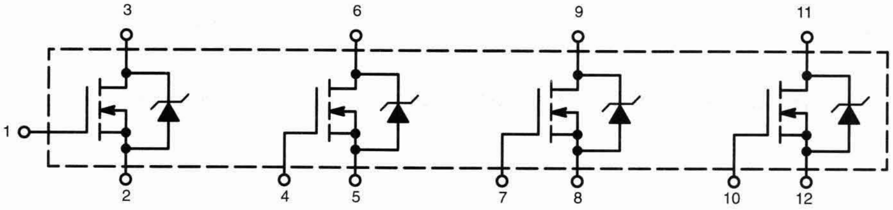

Quad N-Channel Array

MPM3013

Multiple Chip Products (continued)
Insulated

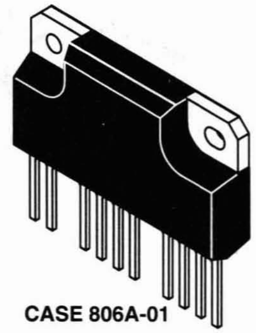

CASE 806A-01

Table 12— ICePAK Products (continued)

The MPM6002 advanced high voltage Insulated Gate Bipolar Transistor (IGBT) Half Bridge with Free Wheeling Diodes in the ICePAK package is designed for high voltage, high speed switching applications in bridge configurations such as servo drives, PWM motor controls and other application where a robust device with low on losses, fast switching times and ease of drive are important considerations.

V_{CEO} (Volts) Min	$V_{CE(on)}$ (Volts) Max	Device	I_D (cont) Amps	P_D(1) (Watts) Max	Description
600	3.5	MPM6002(7)	15	50	IGBT / Rectifier Half-Bridge

(1) T_C = 25°C
(7) To be introduced

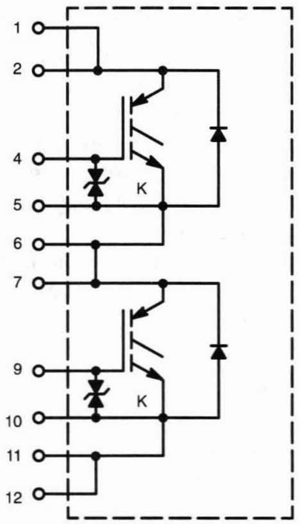

IGBT/Rectifier Half-Bridge

MPM6002

Table 13 — TMOS Power MOSFET Modules

Max I_D (cont) Amps	Max V_{DSS} Volts	Device Type	Module Type	Max $V_{DS(on)}$ Volts	Conditions: I_D Amps	Conditions: V_{GS} Volts	Max. Resistive Switching: t_{on} µs	t_{off} µs	t_f µs	Conditions: I_D(A)	Conditions: V_G	P_D T_C = 25°C Watts	Case No.	Circuit Config.
15	450	MT15FR45 (UL)	Six-pack	6	15x6	10	0.6	2	0.5	15	10	125x6	809-02	R
50	450	MT50BY45	Dual	7	50	10	0.8	1.3	0.2	50	10	400x2	816-02	Y

(UL) UL RECOGNIZED

Table 14 — TMOS Power MOSFET Module Circuit Configurations and Packages

Y

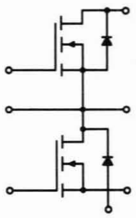

CASE 816-02

R

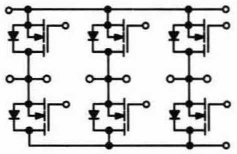

CASE 809-02

SMARTDISCRETES PRODUCTS

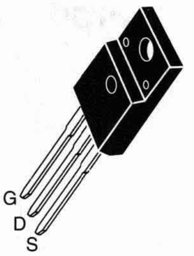

CASE 221D-02
ISOLATED TO-220
(MLA PREFIX)
(MPPD PREFIX)
STYLE 1

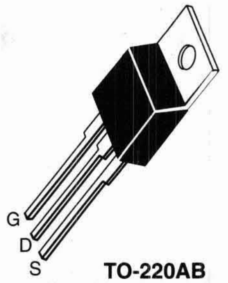

TO-220AB
CASE 221A-06
(MLP PREFIX)
STYLE 5

The SMARTDISCRETES Concept

From a standard power MOSFET process, several active and passive elements can be obtained that provide on-chip protection to the basic power device. Such elements require only a small increase in silicon area and/or the addition of one masking layer to the process. The resulting device exhibits significant improvements in ruggedness and reliability and a system cost reduction. These SMARTDISCRETES functions can now provide an economical alternative to smart power ICs for power applications requiring low on-resistance, high voltage and high current.

MPPD2021

This Logic Level Insulated Gate Bipolar Transistor (IGBT) features Gate-Source ESD protection and Gate-Drain over-Voltage Protection from SMARTDISCRETES monolithic circuitry for usage as an ignition coil driver.

Table 15 — Case 221D-02

V_{CEO} (Volts)	$V_{CE(on)}$ (Volts) Max	I_C (Amps)	Device	I_C (cont) Amps	P_D(1) (Watts) Max
350 Clamped	1.8	10	*MPPD2021* ℛ	10	50

(1) $T_C = 25°C$

ℛ Indicates that Isolated TO-220 devices are UL Recognized

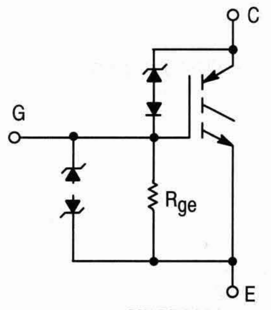

MPPD2021

MLA1N06CL and MLP1N06CL

The MLP1N06CL and MLA1N06CL are SMARTDISCRETES devices that have integrated on-chip current limit capability, drain-to-source voltage clamping and gate voltage protection. The logic level processing allows operation of these devices at half of the gate-to-source (5 volts) voltage of the conventional MOSFETs and can now be driven directly from CMOS or TTL logic drivers. This integration of technologies results in an intelligent, monolithic power circuit that offers a reduced parts count and improved reliability by replacing resistors, diodes, a bipolar transistor and a MOSFET with one device.

Table 16 — Case 221D-02 Case 221A-06

V_{DSS} (Volts) Min	$R_{DS(on)}$ (Ohms) Max	I_D (Amps)	Device	I_D (cont) Amps	P_D(1) (Watts) Max
60 Clamped voltage	0.75	1	*MLP1N06CL*	Current limited	40
			MLA1N06CL ℛ		30

(1) $T_C = 25°C$

ℛ Indicates that Isolated TO-220 devices are UL Recognized

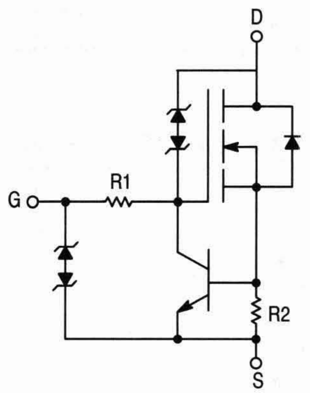

MLP1N06CL/MLA1N06CL

MOSFET Turn-Off Devices SMALLBLOCK™ Products

This new series of MOSFET turn-off devices offers an economical way to reduce the turn-off time of power MOSFETs. Additionally, they clamp the MOSFET gate voltage to a safe level. The use of a MOSFET turn-off device lowers component count, reduces system cost and board space, and optimizes the switching performance of the MOSFET. Applications for these devices include PWM circuits in switchmode power supplies, DC-DC converters and motor controls for brush and brushless motors.

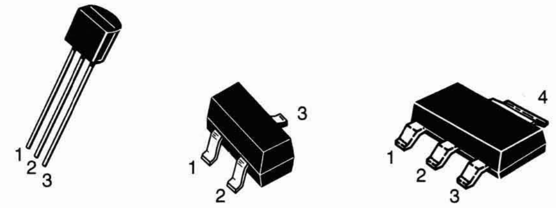

CASE 29-04 (TO-226AA) TO-92 STYLE 33

CASE 318-07 (TO-236AB) SOT-23 STYLE 22

CASE 318E-04 (TO-261AA) SOT-223 STYLE 6

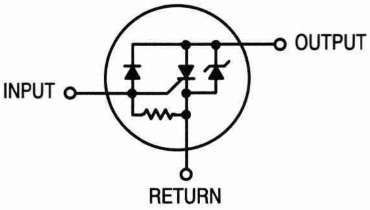

Table 17 — MOSFET Turn-Off Devices

The following table is a listing of MOSFET turn-off devices used for reduced turn-off of power MOSFETs.

Device	Marking	V_{in} @ 2 mA Min	V_{in} @ 2 mA Max	V_{out} @ 2 mA Min	V_{out} @ 2 mA Max	t_{off} (1000 pF) Typ
Case 29-04 — TO-226AA (TO-92) Pinout: 1-Return, 2-Input, 3-Output						
MDC1000A	MDC1000	9.5	12.5	9	12	15 ns
MDC1005A	MDC1005	5.5	6.8	5	6.3	22 ns
Case 318-07 — TO-236AB (SOT-23) Pinout: 1-Return, 3-Output, 2-Input						
MDC1000BLT1	C10	9.5	12.5	9	12	15 ns
MDC1005BLT1	C05	5.5	6.8	5	6.3	22 ns
Case 318E-04 — TO-261AA (SOT-223) Pinout: 1-Return, 2-Input, 3-Output, 4-Input						
MDC1000CT1	C1000	9.5	12.5	9	11.5	15 ns

Devices listed in bold, italic are Motorola preferred devices.

SMALLBLOCK MOSFET turn-off devices are manufactured and available from the Small-Signal Products Group.

Bipolar Power Transistors

Selection By Package

Package	I_C Range (Amps)	V_{CE} Range (Volts)	P_D (Watts)	Page #
TO-204AA (TO-3) Case 1-07	2.5–30	40–1500	36–250	5.3-26
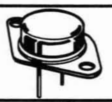 TO-204AE Case 197A-03	40–60	60–500	250–300	5.3-26
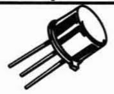 TO-205AD (TO-39) Case 79-04	0.5–5.0	40–400	5.0–10	5.3-33
TO-213AA (TO-66) Case 80-02	1.0–10	40–325	20–90	5.3-32
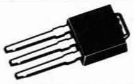 DPAK Case 369-06	0.5–10	40–400	12.5–20	5.3-25
DPAK Case 369A-10	0.5–10	40–400	12.5–20	5.3-25
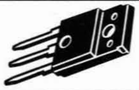 ISOLATED TO-218 TYPE Case 340B-03	8–15	400–700	50	5.3-17
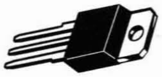 TO-218 TYPE Case 340D-01	6.0–25	60–850	100–150	5.3-21
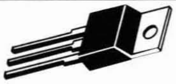 TO-220AB Case 221A-06	0.5–15	30–1800	15–125	5.3-17
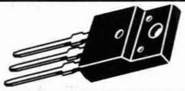 ISOLATED TO-220 TYPE Case 221D-02	5–12	80–550	40–45	5.3-16
TO-225AA (TO-126 TYPE) Case 77-07	0.3–5.0	25–400	12.5–40	5.3-23
Case 152-02	0.5–2.0	30–300	10	5.3-26
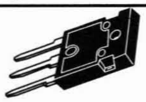 Case 340F-03 (TO-247 TYPE)	10–15	100–1500	100–200	5.3-22
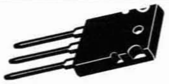 TO-3PBL Case 340G-01	15–25	60–1000	150–200	5.3-22

Bipolar Power Transistors

STYLE 2:
PIN 1. BASE
2. COLLECTOR
3. EMITTER

CASE 221D-02
UL Recognized
File #E69369

STYLE 1:
PIN 1. BASE
2. COLLECTOR
3. EMITTER

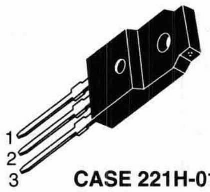

CASE 221H-01
(for 2SC3298B & 2SA1306B only)

Table 1 – Plastic (Isolated TO-220 Type)

I_C Cont Amps Max	$V_{CEO(sus)}$ Volts Min	V_{CES} Volts Min	Device Type NPN	Device Type PNP	h_{FE} Min/Max	@ I_C Amp	Resistive Switching t_s µs Max	Resistive Switching t_f µs Max	Resistive Switching @ I_C Amp	f_T MHz Min	P_D (Case) Watts @ 25°C
1	250		***MJF47***		30/150	0.3	2 typ	0.17 typ	0.3	10	28
1.5	200		***2SC3298B***(4)★	***2SA1306B***(4)★	70/240	0.1				100 typ	20
2	400	700	***BUL44F***★		14/36	0.4	2.75(3)	0.2(3)	1	12 typ	20
		1000	***MJF18002***★		14/36	0.2	3(3)	0.17(3)	1	12 typ	20
3	100		***MJF31C***★	***MJF32C***★	10 min	1	0.6	0.3	1	3	28
5	100		***MJF122***(2)	***MJF127***(2)	2000 min	3	1.5 typ	1.5 typ	3	4(1)	28
	400	700	***BUL45F***★		16/40	1	1.7(3)	0.12(3)	1	12 typ	25
	450	1000	***BUT11AF***		10 min	5	4	0.8	2.5		40
		1000	***MJF16002***		5 min	5	3	0.3	3		40
		1000	***MJF18004***★		14/36	1	3(3)	0.3(3)	2.5	12 typ	25
6	250	550	***MJF16204***		5 min	6	1.5(3)	0.15(3)	1	10	45
8	80			***MJF6107***	30/90	2	0.5 typ	0.13 typ	2	4	35
	150		***MJF15030***	***MJF15031***	40 min	3	1 typ	0.15 typ	3	30	35
	400	700	***MJF13007***		5/30	5	3	0.7	5	4	40
		700	***BUL146F***★		14/36	1.5	4(3)	0.17(3)	3	12 typ	40
	450	1000	***MJF18006***★		14/36	1.5	1.5 typ(3)	0.1 typ(3)	3	12 typ	40
10	60		***MJF3055***	***MJF2955***	20/100	4				2	40
	80		***MJF44H11***	***MJF45H11***	40/100	4	0.5 typ	0.14 typ	5	40	35
	100		***MJF6388***(2)	***MJF6668***(2)	3k/20k	3	1.5 typ	1.5 typ		20(1)	40
	400	700	***BUL147F***★		14/36	2	4(3)	0.17(3)	4	12 typ	45
	450	1000	***MJF18008***★		16/36	2	3 typ(3)	0.12 typ(3)	4	12 typ	45
12	400	700	***MJF13009***		6/30	8	3	0.7	8	8	40

(1) $|h_{fe}|$ @ 1 MHz
(2) Darlington
(3) Switching tests performed w/special application simulator circuit. See data sheet for details.
(4) Supplied in Case 221H-01
★ New Product

Devices listed in bold, italic are Motorola preferred devices.

STYLE 1:
PIN 1. BASE
2. COLLECTOR
3. EMITTER

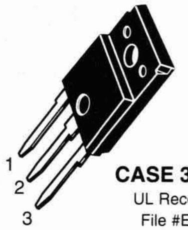

CASE 340B-03
UL Recognized
File #E69369

Table 2 – Plastic (Isolated TO-218 Type)

I_C Cont Amps Max	$V_{CEO(sus)}$ Volts Min	V_{CES} Volts Min	Device Type		h_{FE} Min/Max	@ I_C Amp	Resistive Switching			f_T MHz Min	P_D (Case) Watts @ 25°C
			NPN	PNP			t_s µs Max	t_f µs Max	@ I_C Amp		
8	500	1000	MJF16006A		5 min	8	2.5	0.25	5		50
	700	1500	BU1008AF		3 min	4.5	8(3)	0.5(3)	4.5	7 typ	50
		1500	BU1008ADF(5)		3 min	4.5	8(3)	0.5(3)	4.5	7 typ	50
10	400		MJF10012(2)		100/12k	6	15	15	6		50
	650	1500	MJF16212★		4/10	10	4(3)	0.5(3)	5.5	2.75 typ	50
	800	1500	MJF16018★		4 min	5	4.5 typ	0.2 typ	5	5	50
12	500	1200	MJF16206★		5/13	10	2.25	0.25	6.5	3 typ	50
15	500	1000	MJF16010A		5 min	15	3	0.4	10		50
		1000	MJF16210★		5/13	15	2(3)	0.24(3)	8.5	2.5 typ	50

(1) $|h_{fe}|$ @ 1 MHz
(2) Darlington
(3) Switching tests performed w/special application simulator circuit. See data sheet for details.
(5) "D" designator indicates internal Collector-emitter diode
★ New Product

STYLE 1:
PIN 1. BASE
2. COLLECTOR
3. EMITTER
4. COLLECTOR

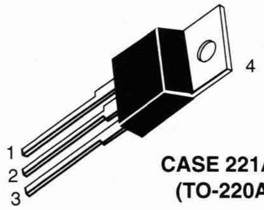

CASE 221A-06
(TO-220AB)

Table 3 – Plastic TO-220

I_C Cont Amps Max	$V_{CEO(sus)}$ Volts Min	Device Type		h_{FE} Min/Max	@ I_C Amp	Resistive Switching			f_T MHz Min	P_D (Case) Watts @ 25°C
		NPN	PNP			t_s µs Max	t_f µs Max	@ I_C Amp		
0.5	350	***MJE2360T***		15 min	0.1				10 typ	30
		MJE2361T		40 min	0.1				10 typ	30
1	80	TIP29B	TIP30B	15/75	1	0.6 typ	0.3 typ	1	3	30
	100	TIP29C	TIP30C	15/75	1	0.6 typ	0.3 typ	1	3	30
	250	***TIP47***		30/150	0.3	2 typ	0.18 typ	0.3	10	40
	300	***TIP48***	***MJE5730***	30/150	0.3	2 typ	0.18 typ	0.3	10	40
	350	***TIP49***	***MJE5731***	30/150	0.3	2 typ	0.18 typ	0.3	10	40
	400	***TIP50***	***MJE5731A***(7)	30/150	0.3	2 typ	0.18 typ	0.3	10	40
2	60	BD239A	BD240A	15 min	1				3	30
		TIP110(2)	TIP115(2)	500 min	2	1.7 typ	1.3 typ	2	25(1)	50
	80	***BD239B***	***BD240B***	15 min	1				3	30
		TIP111(2)	***TIP116***(2)	500 min	2	1.7 typ	1.3 typ	2	25(1)	50
	100	***BD239C***	***BD240C***	25 min	1				3	30
		TIP112(2)(6)	***TIP117***(2)(6)	500 min	2	1.7 typ	1.3 typ	2	25(1)	50

(1) $|h_{fe}|$ @ 1 MHz
(2) Darlington
(6) Available as preferred chip
(7) V_{CEO} = 375 V

(continued)

Devices listed in bold, italic are Motorola preferred devices.

Table 3 – Plastic TO-220 (continued)

I_CCont Amps Max	$V_{CEO(sus)}$[8] Volts Min	Device Type NPN	Device Type PNP	h_{FE} Min/Max	@ I_C Amp	Resistive Switching t_s µs Max	Resistive Switching t_f µs Max	Resistive Switching @ I_C Amp	f_T MHz Min	P_D (Case) Watts @ 25°C
2	400/700	***BUL44★***		14/36	0.4	2[3]	0.2[3]	1	12 typ	40
	450/1000	***BUX85***		30	0.1	3.5	1.4	1	4	50
	450/1000	***MJE18002★***		14/36	0.2	3[3]	0.17[3]	1	12 typ	40
	900/1800	***MJE1320***		3 min	1	4 typ	0.8 typ	1		80
2.5	700/1200	***MJE8500***		7.5 min	0.5	4	2	1		65
	750/1500	***MJE12007***[6]		1.1 min	2		1	2	4 typ	65
	800/1400	***MJE8501***		7.5 min	0.5	4	2	1		65
3	60	BD241A	BD242A	25 min	1				3	40
		TIP31A	TIP32A	25 min	1	0.6 typ	0.3 typ	1	3	40
	80	***BD241B***	***BD242B***	25 min	1				3	40
		TIP31B	***TIP32B***	25 min	1	0.6 typ	0.3 typ	1	3	40
	100	***BD241C***	***BD242C***	25 min	1				3	40
		TIP31C[6]	***TIP32C***[6]	25 min	1	0.6 typ	0.3 typ	1	3	40
	150		***MJE9780***	50/200	0.5				5 typ	40
4	40		***MJE1123***	45/100	4				5	75
	60	***BD535***	***BD536***	25 min	2	0.5 typ	0.05 typ		3	50
		MJE800T[2]	***MJE700T***[2]	750 min	1.5				1[1]	40
	80	***D44C12★***	***D45C12★***	40/120	0.2			1	40 typ	30
	300/600	MJE13004		6/30	3	3	0.7	3	4	60
	400/700	***MJE13005***		6/30	3	3	0.7	3	4	60
5	60	TIP120[2]	TIP125[2]	1k min	3	1.5 typ	1.5 typ	3	4[1]	65
	80	***TIP121***[2]	***TIP126***[2]	1k min	3	1.5 typ	1.5 typ	3	4[1]	65
	100	***TIP122***[2][6]	***TIP127***[2][6]	1k min	3	1.5 typ	1.5 typ	4	4[1]	75
	250	***2N6497***		10/75	2.5	1.8	0.8	2.5	5	80
	300	***2N6498***		10/75	2.5	1.8	0.8	2.5	5	80
	400/700	***BUL45★***		16/40	1	1.7[3]	0.12[3]	1	12 typ	100
	450/1000	***MJE16002***		5 min	5	3	0.3	3		80
	450/850	***MJE16004***		7 min	5	2.7	0.35	3		80
	450/1000	***MJE18004***		14/36	1	3	0.5	2.5	12	100
	700/1200	***MJE8502***		7.5 min	1	4	2	2.5		80
	800/1400	***MJE8503***		7.5 min	1	4	2	2.5		80
6	60	BD243A	BD244A	15 min	3				3	65
		TIP41A	TIP42A	15/75	3	0.4 typ	0.15 typ	3	3	65
	80	***BD243B***	***BD244B***	15 min	3				3	65
		TIP41B	***TIP42B***	15/75	3	0.4 typ	0.15 typ	3	3	65
	100	***BD243C***	***BD244C***	15 min	3				3	65
		TIP41C	***TIP42C***	15/75	3	0.4 typ	0.15 typ	3	3	65
	400	***BUV46***		5 min	3.5	3	0.8	2.5	12	85
	250/550	***MJE16204***		5 min	6	1.5[2]	0.15[2]	1	10	80

(1) $|h_{fe}|$ @ 1 MHz
(2) Darlington
(3) Switching tests performed w/special application simulator circuit. See data sheet for details.
(6) Available as preferred chip
(8) When 2 voltages are given, the format is $V_{CEO(sus)}/V_{CES}$.
★ New Product

(continued)

Devices listed in bold, italic are Motorola preferred devices.

Table 3 – Plastic TO-220 (continued)

I_C Cont Amps Max	$V_{CEO(sus)}$(8) Volts Min	Device Type NPN	Device Type PNP	h_{FE} Min/Max	@ I_C Amp	Resistive Switching t_s µs Max	Resistive Switching t_f µs Max	Resistive Switching @ I_C Amp	f_T MHz Min	P_D (Case) Watts @ 25°C
7	30	2N6288	2N6111	30/150	3	0.4 typ	0.15 typ	3	4	40
	50		2N6109	30/150	2.5	0.4 typ	0.15 typ	3	4	40
	60	BD797	BD798	25 min	3				3	65
	70	***2N6292***	***2N6107***	30/150	2	0.4 typ	0.15 typ	3	4	40
	80	***BD799***	***BD800***	15 min	3				3	65
	100	***BD801***	***BD802***	15 min	3				3	65
	150	***BU407,D***		30 min	1.5		0.75	5	10	60
	200	***BU406,D***		30 min	1.5		0.75	5	10	60
	375	***BU522***(2)		250 min	2.5				7.5	75
	425	***BU522A***(2)		250 min	2.5				7.5	75
	450	***BU522B***(2)		250 min	2.5				7.5	75
8	60	2N6043(2)	2N6040(2)	1k/10k	4	1.5 typ	1.5 typ	3	4(1)	75
		BDX53A(2)	BDX54A(2)	750 min	3				4(1)	60
		BD897(2)	BD898(2)	750 min	3				1(1)	70
		BD897A(2)	BD898A(2)	750 min	4				1(1)	70
		TIP100(2)	TIP105(2)	1k/20k	3	1.5 typ	1.5 typ	3	4(1)	80
	80	***2N6044***(2)	***2N6041***(2)	1k/10k	4	1.5 typ	1.5 typ	3	4(1)	75
		BDX53B(2)	***BDX54B***(2)	750 min	3				4(1)	60
		BD899(2)	***BD900***(2)	750 min	3				1(1)	70
		BD899A(2)	***BD900A***(2)	750 min	4				1(1)	70
		TIP101(2)	***TIP106***(2)	1k/20k	3	1.5 typ	1.5 typ	3	4(1)	80
	100	***2N6045***(2)	***2N6042***(2)	1k/10k	3	1.5 typ	1.5 typ	3	4(1)	75
		BDX53C(2)	***BDX54C***(2)	750 min	3					
		BD901(2)	***BD902***(2)	750 min	3				1(1)	70
		TIP102(2)	***TIP107***(2)	1k/20k	3	1.5 typ	1.5 typ	3	4(1)	80
	120	***MJE15028***	***MJE15029***	20 min	4				30	50
	150	***MJE15030***(6)	***MJE15031***(6)	20 min	4				30	50
		BU807(2)		100 min	5	0.55 typ	0.2 typ	5		60
	200	***BU806***(2)		100 min	5	0.55 typ	0.2 typ	5		60
	300/600	MJE13006		5/30	5	3	0.7	5	4	80
		MJE5740(2)		200 min	4	8 typ	2 typ	6	4	80
			MJE5850	15 min	2	2	0.5	4		80
	350	***MJE5741***(2)		200 min	4	8 typ	2 typ	6		80
			MJE5851	15 min	2	2	0.5	4		80
	400/700	***BUL146***★		14/36	2	4(3)	0.17(3)	4	12 typ	100
		MJE5742(2)		200 min	4	8 typ	2 typ	6		80
	400/700	***MJE13007***(6)		5/30	5	3	0.7	5		80
			MJE5852(6)	15 min	2	2	0.5	4		80
	400/650	***MJE16106***★		6/22	8	2 typ	0.1 typ	5		100
	450/1000	***BUT56A***		10 min	2	3	0.5	2	12	100
	450/1000	***MJE18006***★		14/36	1.5	1.5 typ(3)	0.1 typ(3)	3	12 typ	100
	550	***BUT47C***		8 min	2	4		4	12	100

(continued)

(1) $|h_{fe}|$ @ 1 MHz
(2) Darlington
(3) Switching tests performed w/special application simulator circuit. See data sheet for details.
(6) Available as preferred chip
(8) When 2 voltages are given, the format is $V_{CEO(sus)}/V_{CES}$.
★ New Product

Devices listed in bold, italic are Motorola preferred devices.

Table 3 – Plastic TO-220 (continued)

I_C Cont Amps Max	$V_{CEO(sus)}$(8) Volts Min	Device Type NPN	Device Type PNP	h_{FE} Min/Max	@ I_C Amp	Resistive Switching t_s µs Max	Resistive Switching t_f µs Max	Resistive Switching @ I_C Amp	f_T MHz Min	P_D (Case) Watts @ 25°C
10	20	***MJE5420Z***(2)(9)★		6k min	6					100
	60	***BDX33A***(2)	***BDX34A***(2)	750 min	4				3	70
		BD807	***BD808***	15 min	4				1.5	90
		D44H8	***D45H8***	40 min	4					50
		MJE3055T	***MJE2955T***	20/70	4					75
		2N6387(2)	***2N6667***(2)	1k/20k	5				20(1)	65
	80	***BDX33B***(2)	***BDX34B***(2)	750 min	3				3	70
		BD809	***BD810***	15 min	4				1.5	90
		D44E3(2)		1000 min	5	2 typ	0.5 typ	10		50
		2N6388(2)	***2N6668***(2)	1k/20k	5				20(1)	65
		D44H10	***D45H10***	20 min	4	0.5 typ	0.14 typ	5	50 typ	50
		D44H11(6)	***D45H11***(6)	40 min	4	0.5 typ	0.14 typ	5	50 typ	50
	100	***BDX33C***(2)	***BDX34C***(2)	750 min	3				3	70
	400/700	***BUL147***★		14/36	2	4(3)	0.17(3)	4	12 typ	125
	450/1000	***MJE18008***★		16/36	2	3 typ(3)	0.1 typ(3)	4	12 typ	125
12	300/600	MJE13008		6/30	8	3	0.7	8	4	100
	400/700	***MJE13009***		6/30	8	3	0.7	8	4	100
15	60	***2N6487***	***2N6490***	20/150	5	0.6 typ	0.3 typ	5	5	75
		BDW40(2)	***BDW45***(2)	1k min	5	1 typ	1.5 typ	5	4	85
	80	***2N6488***	***2N6491***	20/150	5	0.6 typ	0.3 typ	5	5	75
		BDW41(2)	***BDW46***(2)	1k min	5	1 typ	1.5 typ	5	4	85
		D44VH10	***D45VH10***	20 min	4	0.5	0.09	8	50 typ	83
	100	***BDW42***(2)	***BDW47***(2)	1k min	5	1 typ	1.5 typ	5	4	85

(1) $|h_{fe}|$ @ 1 MHz
(2) Darlington
(3) Switching tests performed w/special application simulator circuit. See data sheet for details.
(6) Available as preferred chip
(8) When 2 voltages are given, the format is $V_{CEO(sus)}/V_{CES}$.
(9) Self protected Darlington
★ New Product

Devices listed in bold, italic are Motorola preferred devices.

STYLE 1:
PIN 1. BASE
2. COLLECTOR
3. EMITTER
4. COLLECTOR

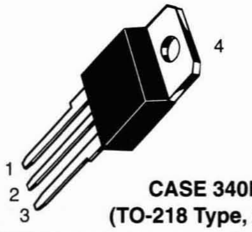

CASE 340D-01
(TO-218 Type, SOT-93)

Table 4 — Plastic TO-218 Type

I_CCont Amps Max	$V_{CEO(sus)}$(8) Volts Min	Device Type		h_{FE} Min/Max	@ I_C Amp	Resistive Switching			f_T MHz Min	P_D (Case) Watts @ 25°C
		NPN	PNP			t_s µs Max	t_f µs Max	@ I_C Amp		
5	450/1000 450/850	***MJH16002*** MJH16004		5 min 7 min	5 5	3 2.7	0.3 0.35	3 3		100 100
	500/1000	***MJH16002A***		5 min	5	3	0.3	3		100
8	450/850 450/850	***MJH16006*** MJH16008		5 min 7 min	8 8	2.5 2.2	0.25 0.25	5 5		125 125
	500	***BUT50P***(2)		30 min	2	0.75 typ	0.1 typ	5		100
	500/1000	***MJH16006A***		5 min	8	2.5	0.25	5		125
	750/1500	***MJH12005***		5 typ	8		0.4 typ	5	4	100
10	60	TIP140(2)	TIP145(2)	500 min	10	2.5 typ	2.5 typ	5	4(1)	125
	80	***TIP33B*** ***TIP141***(2)	***TIP34B*** ***TIP146***(2)	20 min 500 min	3 10	 2.5 typ	 2.5 typ	 5	3 4(1)	80 125
	100	***BDV65B***(2) TIP33C TIP142(2)	***BDV64B***(2) TIP34C TIP147(2)	1k min 20 min 500 min	5 3 10	 2.5 typ	 2.5 typ	 5	 3 4(1)	125 80 125
	250	***BU323AP***(2)		150 min	6	15	15	6		125
	400	***MJH10012***(2)		100/2k	6	15	15	6		118
15	60	***TIP3055***	***TIP2955***	5 min	10				2.5	80
	150	***MJH11018***(2)	***MJH11017***(2)	400/15k	10				3(1)	150
	200	***MJH11020***(2)	***MJH11019***(2)	400/15k	10				3(1)	150
	250	***MJH11022***(2)	***MJH11021***(2)	400/15k	10				3(1)	150
	400	***BUV48***		8 min	10	2	0.4	10		150
	450	***BUV48A***		8 min	8	2	0.4	10		150
	500	***BUT51P***(2)		40 min	5	1.1	0.16	10		125
16	140	***MJE4342***	***MJE4352***	15 min	8	1.2 typ	1.2 typ	8	1	125
	160	***MJE4343***	***MJE4353***	15 min	8	1.2 typ	1.2 typ	8	1	125
20	60	MJH6282(2)	MJH6285(2)	750/18k	10				4(1)	125
	80	***MJH6283***(2)	***MJH6286***(2)	750/18k	10				4(1)	125
	100	***MJH6284***(2)	***MJH6287***(2)	750/18k	10				4(1)	125
25	60	BD249A TIP35A	 TIP36A	10 min 10/75	15 15	 0.6 typ	 0.3 typ	 10	3 3	125 125
	80	***BD249B*** ***TIP35B***	 ***TIP36B***	10 min 10/75	15 15	 0.6 typ	 0.3 typ	 10	3 3	125 125
	100	***BD249C*** ***TIP35C***	***BD250C*** ***TIP36C***	10 min 10/75	15 15	 0.6 typ	 0.3 typ	 10	3 3	125 125

(1) $|h_{fe}|$ @ 1 MHz
(2) Darlington
(8) When 2 voltages are given, the format is $V_{CEO(sus)}/V_{CES}$.

Devices listed in bold, italic are Motorola preferred devices.

STYLE 2:
PIN 1. BASE
2. COLLECTOR
3. EMITTER

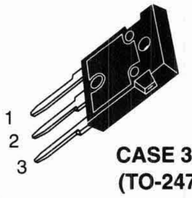

CASE 340F-03
(TO-247 Type)

Table 5 — Plastic TO-247 Type

I_CCont Amps Max	$V_{CEO(sus)}$ Volts Min	V_{CES} Volts Min	Device Type NPN	Device Type PNP	h_{FE} Min/Max	@ I_C Amp	Resistive Switching t_s µs Max	Resistive Switching t_f µs Max	Resistive Switching @ I_C Amp	f_T MHz Min	P_D (Case) Watts @ 25°C
10	650	1500	***MJW16212★***		4/10	10	4[3]	0.5[3]	5.5		150
	800	1500	***MJW16018★***		4 min	5	4.5 typ	0.2 typ	5	3 typ	150
12	500	1200	***MJW16206★***		5/13	10	2.25	0.25	6.5	3 typ	150
15	400	650	***MJW6678★***		8 min	15	2.5	0.5	15		125
	400	650	***MJW16110***		6/20	10	0.8 typ	0.1 typ	10		135
	450	850 850	***MJW16010*** MJW16012		5 min 7 min	15 15	1.2 0.9	0.2 0.15	10 10		150 150
	500	1000 1000	***MJW16010A*** ***MJW16210★***		5 min 5/13	15 15	3	0.4 0.24[10]	10 8.5[10]	 2.5 typ	150 150
30	450	1000	***MJW18020★***		8 min	20					180

(1) $|h_{fe}|$ @ 1 MHz
(3) Switching tests performed w/special application simulator circuit. See data sheet for details.
(10) Tested in Applications simulator: see Data Sheet
★ New Product

STYLE 2:
PIN 1. BASE
2. COLLECTOR
3. EMITTER

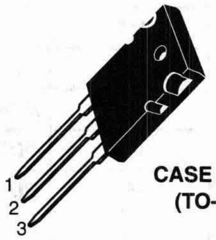

CASE 340G-01
(TO-3PBL)

Table 6 — Plastic TO-3PBL

I_CCont Amps Max	$V_{CEO(sus)}$ Volts Min	Device Type NPN	Device Type PNP	h_{FE} Min/Max	@ I_C Amp	Resistive Switching t_s µs Max	Resistive Switching t_f µs Max	Resistive Switching @ I_C Amp	f_T MHz Min	P_D (Case) Watts @ 25°C
15	200	***2SC3281★***	***2SA1302★***	55/160	1				30 typ	150

★ New Product

Devices listed in bold, italic are Motorola preferred devices.

STYLE 1:
PIN 1. EMITTER
2. COLLECTOR
3. BASE

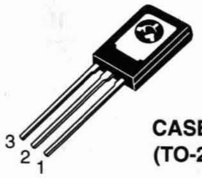

CASE 77-07
(TO-225AA)

STYLE 3:
PIN 1. BASE
2. COLLECTOR
3. EMITTER

Table 7 — Plastic TO-225 Type (Formerly TO-126 Type)

I_C Cont Amps Max	$V_{CEO(sus)}$ Volts Min	Device Type		h_{FE} Min/Max	@ I_C Amp	Resistive Switching			f_T MHz Min	P_D (Case) Watts @ 25°C
		NPN	PNP			t_s µs Max	t_f µs Max	@ I_C Amp		
0.3	350	***MJE3439***		40/160	0.02				15	15
0.5	150	***MJE341***		25/200	0.05				15	20.8
	200	***MJE344***		30/300	0.05				15	20.8
	250	2N5655 ***BD157***		30/250 30/240	0.1 0.05	3.5 typ	0.24 typ	0.1	10	20 20
	300	***BD158*** ***MJE340***[6] 2N5656	 ***MJE350***[6] 	30/240 30/240 30/250	0.05 0.05 0.1	 3.5 typ	 0.24 typ	 0.1	 10	20 20.8 20
	350	***2N5657*** ***BD159***		30/250 30/240	0.1 0.05	3.5 typ	0.24 typ	0.1	10	20 20
1	40	***2N4921***	***2N4918***	20/100	0.5	0.6 typ	0.3 typ	0.5	3	30
	60	***2N4922***	***2N4919***	20/100	0.5	0.6 typ	0.3 typ	0.5	3	30
	80	***2N4923***	***2N4920***	20/100	0.5	0.6 typ	0.3 typ	0.5	3	30
1.5	45	***BD165*** ***BD135***	***BD166*** ***BD136***	15 min 40/250	0.5 0.15				6	20 12.5
	60	***BD137***	***BD138***	40/250	0.15					12.5
	80	***BD169*** ***BD139*** 	***BD170*** ***BD140*** ***BD140.10***	15 min 40/250 63/160	0.5 0.15 0.15				6	20 12.5 12.5
	300	***MJE13002***[11]		5/25	1	4	0.7	1	5	40
	400	***MJE13003***[6][11]		5/25	1	4	0.7	1	5	40
2	60	***BD235***	***BD236***	25 min	1				3	25
	80	***BD237***		25 min	1				3	25
	100	***MJE270***[2][11]	***MJE271***[2][11]	1.5k min	0.12				6	15
3	60	***MJE181***	***MJE171***	50/250	0.1	0.6 typ	0.12 typ	0.1	50	12.5
	80	***BD179*** ***MJE182***[6]	***BD180*** ***MJE172***[6]	40/250 50/250	0.15 0.1	 0.6 typ	 0.12 typ	 0.1	3 50	30 12.5
	200	***BUY49P***		30 min	0.5				25	20

(1) $|h_{fe}|$ @ 1 MHz
(2) Darlington
(6) Available as preferred chip
(11) Case 77 (Style 3)

(continued)

Devices listed in bold, italic are Motorola preferred devices.

Table 7 — Plastic TO-225 Type (continued)

I_C Cont Amps Max	$V_{CEO(sus)}$ Volts Min	Device Type NPN	Device Type PNP	h_{FE} Min/Max	@ I_C Amp	Resistive Switching t_s µs Max	Resistive Switching t_f µs Max	Resistive Switching @ I_C Amp	f_T MHz Min	P_D (Case) Watts @ 25°C
4	40	***MJE521***	***MJE371***	40 min	1					40
	45	***BD437***	***BD438***	40 min	2				3	36
			BD776[2]	750 min	2				20	15
	60		***BD440***	25 min	2				3	36
		BD677[2]	***BD678***[2]	750 min	1.5					40
		BD677A[2]	***BD678A***[2]	750 min	2					40
		BD787	***BD788***	20 min	2				50	15
		BD777[2]	***BD778***[2]	750 min	2				20	15
		2N5191	***2N5194***	25/100	1.5	0.4 typ	0.4 typ	1.5	2	40
		MJE800[2]	***MJE700***[2]	750 min	1.5				1[1]	40
		2N6038[2]	***2N6035***[2]	750/18k	2	1.7 typ	1.2 typ	2	25	40
	80	***2N5192***	***2N5195***	25/100	1.5	0.4 typ	0.4 typ	1.5	2	40
		BD441	***BD442***	15 min	2				3	36
		BD679[2]	***BD680***[2]	750 min	1.5					40
		BD679A[2]	***BD680A***[2]	750 min	2					40
		BD789	***BD790***	10 min	2				40	15
		BD779[2]	***BD780***[2]	750 min	2				20	15
		MJE240	***MJE250***	40/200	0.2	0.15 typ	0.07 typ	2	40	15
		MJE241	***MJE251***	40/120	0.2	0.15 typ	0.07 typ	2	40	15
		MJE802[2]	***MJE702***[2]	750 min	1.5				1[1]	40
		MJE803[2]	MJE703[2]	750 min	2				1[1]	40
		2N6039[2][6]	***2N6036***[2][6]	750/18k	2	1.7 typ	1.2 typ	2	25	40
	100	***BD681***[2]	***BD682***[2]	750 min	1.5					40
		BD791	***BD792***	10 min	2				40	15
		MJE243	***MJE253***	40/120	0.2	0.15 typ	0.07 typ	2	40	15
5	25	***MJE200***[6]	***MJE210***[6]	45/180	2	0.13 typ	0.035 typ	2	65	15

(1) $|h_{fe}|$ @ 1 MHz
(2) Darlington
(6) Available as preferred chip

Devices listed in bold, italic are Motorola preferred devices.

STYLE 1:
PIN 1. BASE
2. COLLECTOR
3. EMITTER
4. COLLECTOR

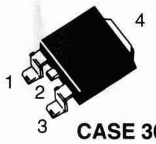

CASE 369A-10(13)

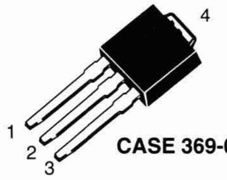

CASE 369-06(12)

Table 8 — DPAK — Surface Mount Power Package

I_C Cont Amps Max	$V_{CEO(sus)}$ Volts Min	Device Type		h_{FE} Min/Max	@ I_C Amp	Resistive Switching			f_T MHz Min	P_D (Case) Watts @ 25°C
		NPN	PNP			t_s µs Max	t_f µs Max	@ I_C Amp		
0.5	300	***MJD340***	***MJD350***	30/240	0.05					15
1	250	***MJD47***		30/150	0.3	2	0.2	0.3	10	15
	350		***MJD5731*** ★	30/175	0.3	1.5	0.2	0.3	10	15
	400	***MJD50***		30/150	0.3	2	0.2	0.3	10	20
1.5	400	***MJD13003***		5/25	1	4	0.7	1	4	15
2	100	***MJD112***(2)	***MJD117***(2)	1000 min	2	1.7	1.3	2	25(1)	20
3	40	***MJD31***	***MJD32***	10 min	1	0.6	0.3	1	3	15
	100	***MJD31C***	***MJD32C***	10 min	1	0.6	0.3	1	3	15
4	45	***MJD148***		30 min	4				3	20
	80	***MJD6039***(2)	***MJD6036***(2)	1k/12k	2	1.7	1.2	2	25	20
	100	***MJD243***	***MJD253***	40/180	0.2	0.16	0.04	1	40	12.5
5	25	***MJD200***	***MJD210***	45/180	2	0.15	0.04	2	65	12.5
6	100	***MJD41C***	***MJD42C***	15/75	3	0.4	0.15	3	3	20
8	80	***MJD44H11***	***MJD45H11***	40 min	4	0.5	0.14	5	50 typ	20
	100	***MJD122***(2)	***MJD127***(2)	1k/12k	4	1.5	2	4	4(1)	20
10	60	***MJD3055***	***MJD2955***	20/100	4	1.5	1.5	3	2	20
	80	***MJD44E3***(2)		1k min	5	2	0.5	10		20

(2) Darlington
(12) Case 369-06 may be ordered by adding -1 suffix to part number.
(13) Case 369A-10 may be ordered tape and reeled by adding a "T4" suffix; 2500 units/reel.
★ New Product

Devices listed in bold, italic are Motorola preferred devices.

STYLE 1:
PIN 1. EMITTER
2. BASE
3. COLLECTOR

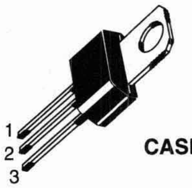

CASE 152-02

Table 9 — Plastic Case 152 (COLLECTOR CONNECTED TO TAB)

I_CCont Amps Max	$V_{CEO(sus)}$ Volts Min	Device Type		h_{FE} Min/Max	@ I_C Amp	Resistive Switching			f_T MHz Min	P_D (Case) Watts @ 25°C
		NPN	PNP			t_s µs Max	t_f µs Max	@ I_C Amp		
0.5	300	***MPSU10***	***MPSU60***	30 min	0.03				45	10
0.8	40	***MPSU02***	***MPSU52***	30 min	0.5				100	10
1	120	***MPUS03***		40 min	0.01				35	10
	180	***MPSU04***		40 min	0.01				35	10
2	30	***MPSU01***	***MPSU51***	50 min	1				50	10
	40	***MPSU01A*** ***MPSU45***(2)	***MPSU51A*** ***MPSU95***(2)	50 min 4k min	1 1				50	10 10
	60	***MPSU05***	***MPSU55***	60 min	0.25				50	10
	80	***MPSU06***	***MPSU56***	60 min	0.25				50	10
	100	***MPSU07***	***MPSU57***	30 min	0.25				50	10

(2) Darlington

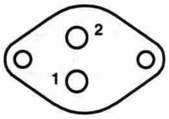

STYLE 1:
PIN 1. BASE
2. EMITTER
CASE 3. COLLECTOR

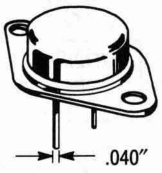

TO-204AA
CASE 1-07

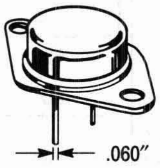

TO-204AE
CASE 197A-03

(Used for high current types at end of table. See types w/footnote (16).)

Table 10 — Metal TO-204 (Formerly TO-3), TO-204AE

I_CCont Amps Max	$V_{CEO(sus)}$(8) Volts Min	Device Type		h_{FE} Min/Max	@ I_C Amp	Resistive Switching			f_T MHz Min	P_D (Case) Watts @ 25°C
		NPN	PNP			t_s µs Max	t_f µs Max	@ I_C Amp		
4	200	MJ15018	MJ15019	30 min	1				20	150
	250	***MJ15020***	***MJ15021***	30 min	1				20	150
5	500/1000	***MJ16002A***		5 min	5	3	0.3	3		125
	700/1200	MJ8502		7.5 min	1	4	2	2.5		150

(8) When 2 voltages are given, the format is $V_{CEO(sus)}/V_{CES}$.

(continued)

Devices listed in bold, italic are Motorola preferred devices.

Table 10 — Metal TO-204, TO-204AE (continued)

I_C Cont Amps Max	$V_{CEO(sus)}$(8) Volts Min	Device Type NPN	Device Type PNP	h_{FE} Min/Max	@ I_C Amp	Resistive Switching t_s µs Max	Resistive Switching t_f µs Max	Resistive Switching @ I_C Amp	f_T MHz Min	P_D (Case) Watts @ 25°C
5	800/1400	***MJ8503***		7.5 min	1	4	2	2.5		150
	700/1500	***BU208A***		2.5 min	4.5	8 typ	0.4 typ	4.5	4 typ	90
	750/1500	***MJ12004***		2.5 min	4.5		1	4.5	4	100
6	100	***2N5758***		25/100	3	0.7 typ	0.5 typ	3	1	150
8	60	MJ1000(2) 2N6055(2)	MJ900(2) 2N6053(2)	1k min 750/18k	3 4	1.5 typ	1.5 typ	4	4(1)	90 100
	80	***MJ1001***(2) ***2N6056***(2)	***MJ901***(2) ***2N6054***(2)	1k min 750/18k	3 4	1.5 typ	1.5 typ	4	4(1)	90 100
	380	***MJ6308★***		5/20	8	2.3(14)	0.12(14)	5		125
	400		***MJ6503***	15 min	2	2	0.5	4		125
	450/850 450/1000	***MJ16006*** ***MJ16008***		5 min 7 min	8 8	2.5 2.2	0.25 0.25	5 5		150 150
	500/1000	MJ16006A		5 min	8	3	0.4	5		150
	750/1500	***MJ12005***		5 min	5		1	5		100
10	40	2N6383(2)	2N6648(2)	1k/20k	5				20(1)	100
	60	2N3715 2N5877 MJ3000(2)	2N3791 2N5875 MJ2500(2)	30 min 20/100 1k min	3 4 5	0.3 typ 1	0.4 typ 0.8	5 4	4 4	150 150 150
	80	***2N3716***(6) ***2N5878*** ***MJ3001***(2)	***2N3792***(6) ***2N5876*** ***MJ2501***(2)	30 min 20/100 1k min	3 4 5	0.3 typ 1	0.4 typ 0.8	5 4	4 4	150 150 150
	140	***2N3442***		20/70	4					117

(continued)

(1) $|h_{fe}|$ @ MHz
(2) Darlington
(6) Available as preferred chip
(8) When 2 voltages are given, the format is $V_{CEO(sus)}/V_{CES}$.
(14) Inductive Switching
★ New Product

Devices listed in bold, italic are Motorola preferred devices.

Table 10 — Metal TO-204, TO-204AE (continued)

I_CCont Amps Max	$V_{CEO(sus)}$(8) Volts Min	Device Type NPN	Device Type PNP	h_{FE} Min/Max	@ I_C Amp	Resistive Switching t_s µs Max	Resistive Switching t_f µs Max	Resistive Switching @ I_C Amp	f_T MHz Min	P_D (Case) Watts @ 25°C
10	200	***MJ410***		30/90	1				2.5	100
	250	***MJ15011***	***MJ15012***	20/100	2					200
	300	***MJ3041***(2)		250 min	2.5					175
	325	***MJ413***		20/80	0.5				2.5	125
		MJ423		30/90	1				2.5	125
	350	MJ13014		8/20	5	2	0.5	5		150
		MJ10006(2)		30/300	5	1.5	0.5	5	10(1)	150
	400	***BU323A***(2)		150 min	6	7.5 typ	5.2 typ	6		175
		MJ10007(2)		30/300	5	1.5	0.5	5	10(1)	150
		MJ10012(2)		100/2k	6	15	15	6		175
		MJ13015		8/20	5	2	0.5	5		150
	600	***MJ10014***(2)		10/250	10	2.5	0.8	10		175
	800/1400	***MJ8505***		7.5 min	1.5	4	2	5		175
	800/1500	***MJ16018***		4 min	5	4.5 typ	0.2 typ	5		150
12	60	2N6057(2)	2N6050(2)	750/18k	6	1.6 typ	1.5 typ	6	4(1)	150
	80	2N6058(2)	2N6051(2)	750/18k	6	1.6 typ	1.5 typ	6	4(1)	150
	100	***2N6059***(2)(6)	***2N6052***(2)(6)	750/18k	6	1.6 typ	1.5 typ	6	4(1)	150
15	60	***2N3055***(6)	***MJ2955***(6)	20/70	4	0.7 typ	0.3 typ	4	2.5	115
		2N3055A	***MJ2955A***	20/70	4				0.8	115
		2N6576(2)		2k/20k	4	2	7	10	10-200(1)	120
		2N5881	2N5879	20/100	6	1	0.8	6	4	160
	80	***2N5882***(6)	***2N5880***(6)	20/100	6	1	0.8	6	4	160
	90	***2N6577***(2)		2k/20k	4	2	7	10	10-200(1)	120
	120	***MJ15015***(6)	***MJ15016***	20/70	4	0.7 typ	0.3 typ	4	1	180
		2N6578(2)		2k/20k	4	2	7	10	10-200(1)	120
	140	***MJ15001***	***MJ15002***	25/150	4				2	200
	150	MJ11018(2)	MJ11017(2)	100 min	15				3(1)	175
	200	***BUX41***		8 min	8	1.5	0.4	8	8	120
		MJ11020(2)		100 min	15				3(1)	175
	250	***MJ11022***(2)(6)	***MJ11019***(2)(6)	100 min	15				3(1)	175
	300		***MJ11021***(2)	6/30	10	4	0.7	10	6 to 24	175
	350	***2N6251***		6/50	10	3.5	1	10	2.5	175

(1) $|h_{fe}|$ @ 1 MHz
(2) Darlington
(6) Available as preferred chip
(8) When 2 voltages are given, the format is $V_{CEO(sus)}/V_{CES}$.

(continued)

Devices listed in bold, italic are Motorola preferred devices.

Table 10 — Metal TO-204, TO-204AE (continued)

I_C Cont Amps Max	$V_{CEO(sus)}$(8) Volts Min	Device Type NPN	Device Type PNP	h_{FE} Min/Max	@ I_C Amp	Resistive Switching t_s µs Max	t_f µs Max	@ I_C Amp	f_T MHz Min	P_D (Case) Watts @ 25°C
15	400/850	***BUX48***		8 min	10	2	0.4	10		175
		2N6547		6/30	10	4	0.7	10	6 to 24	175
	400/650	***MJ16110***		6/20	15	0.8 typ	0.1 typ	10		175
	450/1000	***BUX48A***		8 min	8	2	0.4	10		175
	450/850	***MJ16010***		5 min	15	1.2 typ	0.2 typ	10		175
	450/850	***MJ16012***		7 min	15	0.9 typ	0.15 typ	10		175
		2N6836		10/30	10	3	0.35	10	10	175
	500/1000	***MJ16010A***		5 min	15	3	0.4	10		175
16	120	2N5630	2N6030	20/80	8	1.2 typ	1.2 typ	8	1	200
	140	***2N3773***(6)	***2N6609***	15/60	8	1.1 typ	1.5 typ	8	4	150
		2N5631	***2N6031***(6)	15/60	8	1.2 typ	1.2 typ	8	1	200
	200	MJ15022	MJ15023	15/60	8				5	250
	250	***MJ15024***	***MJ15025***	15/60	8				5	250
18	160	***BUX41N***		8 min	12	1.2	0.25	12	8	120
20	60	***2N3772***		15/60	10				2	150
		2N6282(2)	2N6285(2)	750/18k	10	2.5 typ	2.5 typ	10	4(1)	160
	75	2N5039		20/100	10	1.5	0.5	10	60	140
	80	***2N5303***	***2N5745***	15/60	10	2	1	10	2	200
		2N6283(2)	***2N6286***(2)	750/18k	10	2.5 typ	2.5 typ	10	4(1)	160
	90	***2N5038***(6)		20/100	12	1.5	0.5	12	60	140
	100	***2N6284***(2)(6)	***2N6287***(2)(6)	750/18k	10	2.5 typ	2.5 typ	10	4(1)	160
	125	***BUX40***		8 min	15	1	0.25	15	8	120
	140	***MJ15003***(6)	***MJ15004***(6)	25/150	5				2	250
	160	***BUX11***		10 min	15	1.2	0.25	15	8	150
	200	***BUV11***		10 min	12	1.8	0.4	12	8	150
	350	***MJ10000***(2)		40/400	10	3	1.8	10	10(1)	175
		MJ10004(2)		40/400	10	1.5	0.5	10	10(1)	175

(1) $|h_{fe}|$ @ 1 MHz
(2) Darlington
(6) Available as preferred chip
(8) When 2 voltages are given, the format is $V_{CEO(sus)}/V_{CES}$.

(continued)

Devices listed in bold, italic are Motorola preferred devices.

Table 10 — Metal TO-204, TO-204AE (continued)

I_C Cont Amps Max	$V_{CEO(sus)}$(8) Volts Min	Device Type		h_{FE} Min/Max	@ I_C Amp	Resistive Switching			f_T MHz Min	P_D (Case) Watts @ 25°C
		NPN	PNP			t_s µs Max	t_f µs Max	@ I_C Amp		
20	400	***MJ10001***(2)		40/400	10	3	1.8	10	10(1)	175
		MJ10005(2)		40/400	10	1.5	0.5	10	10(1)	175
		MJ13333		10/60	5	4	0.7	10		175
	450	***MJ10008***(2)		30/300	10	2	0.6	10	8(1)	175
	450/850	***MJ16014***		5 min	20	2.7	0.35	20		250
	450/850	MJ16016		7 min	20	2.2	0.25	20		250
		2N6837		10/30	15	2.5	0.25	15		250
	500	***MJ10009***(2)		30/300	10	2	0.6	10	8(1)	175
		MJ13335		10/60	5	4	0.7	10		175
	750	***MJ10024***(2)		50/600	20	5	1.8	10		250
	850	***MJ10025***(2)		50/600	20	5	1.8	10		250
25	60	2N5885	2N5883	20/100	10	1	0.8	10	4	200
	80	***2N5886***(6)	***2N5884***(6)	20/100	10	1	0.8	10	4	200
			2N6436	30/120	10	1	0.25	10	40	200
	100	***2N6338***	***2N6437***	30/120	10	1	0.25	10	40	200
	120	***2N6339***(6)	***2N6438***(6)	30/120	10	1	0.25	10	40	200
	125	***BUV10***		10 min	20	1.2	0.25	20	8	150
	140	2N6340		30/120	10	1	0.25	10	40	200
	150	***2N6341***		30/120	10	1	0.25	10	40	200
28	400	***BUT13***(2)		20 min	20	2.6	0.8	18		175
30	40	***2N3771***		15/60	15				2	150
		2N5301	2N4398	15/60	15	2	1	10	2	200
	60	***2N5302***	***2N4399***	15/60	15	2	1	10	2	200
		MJ11012(2)	MJ11011(2)	1k min	20				4(1)	200
	90	***BUX39***		8 min	20	1	0.25	20	8	120
		MJ11014(2)	***MJ11013***(2)	1k min	20				4(1)	200
	100	***2N6328***		6/30	30				3	200
		MJ802	***MJ4502***	25/100	7.5				2	200
	120	***MJ11016***(2)(6)	***MJ11015***(2)(6)	1k min	20				4(1)	200
	325	***BUV23***(16)		8 min	16	1.8	0.4	16	8	250
	400/1000	***BUS98***		8 min	20	2.3	0.4	20		250
		BUX98		8 min	20	3	0.8	20		250
	450/1000	***BUS98A***		8 min	16	2.3	0.4	16		250
		BUX98A		8 min	16	3	0.8	16		250
	450/850	***MJ16020***(16)		5 min	30	1.8	0.2	20		250
		MJ16022(16)		7 min	30	1.5	0.15	20		250

(1) $|h_{fe}|$ @ MHz
(2) Darlington
(6) Available as preferred chip
(8) When 2 voltages are given, the format is $V_{CEO(sus)}/V_{CES}$.
(16) Case 197A-03 (TO-204AE)

(continued)

Devices listed in bold, italic are Motorola preferred devices.

Table 10 — Metal TO-204, TO-204AE (continued)

I_C Cont Amps Max	$V_{CEO(sus)}$ Volts Min	Device Type NPN	Device Type PNP	h_{FE} Min/Max	@ I_C Amp	Resistive Switching t_s µs Max	Resistive Switching t_f µs Max	Resistive Switching @ I_C Amp	f_T MHz Min	P_D (Case) Watts @ 25°C
40	200	***BUV21***(16)		10 min	25	1.8	0.4	25	8	150
	250	***BUS52***(16) ***BUV22***(16)		15 min 10 min	40 20	 1.1	 0.35	 20	 8	350 250
	350	***MJ10022***(2)(16)		50/600	10	2.5	0.9	20		250
	400	***MJ10023***(2)(16)		50/600	10	2.5	0.9	20		250
50	60	***2N5685***(16) MJ11028(2)(16)	***2N5683***(16) MJ11029(2)(16)	15/60 400 min	25 50	0.5 typ	0.3 typ	25	2	300 300
	80	***2N5686***(16)	***2N5684***(16)	15/60	25	0.5 typ	0.3 typ	25	2	300
	90	***MJ11030***(2)(16)	***MJ11031***(2)(16)	400 min	50					300
	100	***2N6274***(16)	***2N6378***(16)	30/120	20	0.8	0.25	20	30	250
	120	***2N6275***(16) ***MJ11032***(2)(16)	***2N6379***(16) ***MJ11033***(2)(16)	30/120 400 min	20 50	0.8	0.25	20	30	250 300
	125	***BUV20***(16) ***BUV60***(16)		10 min 10 min	50 80	1.2 1.1	0.25 0.25	50 80	8	250 250
	150	***2N6277***(16)		30/120	20	0.8	0.25	20	30	250
	200	***BUS51***(16)		15 min	50					350
	400	***MJ10015***(2)(16)		10 min	40	2.5	1	20		250
	500	***BUT34***(2)(16) ***MJ10016***(2)(16)		15 min 10 min	32 40	3 2.5	1.5 1	32 20		250 250
56	400	***BUT33***(2)(16)		20 min	36	3.3	1.6	36		250
60	60	MJ14000(16)	MJ14001(16)	15/100	50					300
	80	***MJ14002***(16)	***MJ14003***(16)	15/100	50					300
	200	***MJ10020***(2)(16)		75 min	15	3.5	0.5	30		250
	250	***MJ10021***(2)(16)		75 min	15	3.5	0.5	30		250
70	125	***BUS50***(16)		15 min	50					350
80	100	***BUV18A***(16)		10 min	80	1.1	0.25	80		250

(1) $|h_{fe}|$ @ MHz
(2) Darlington
(16) Case 197A-03 (TO-204AE)

Devices listed in bold, italic are Motorola preferred devices.

STYLE 1:
PIN 1. BASE
2. EMITTER
CASE 3. COLLECTOR

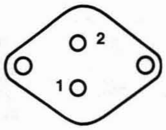

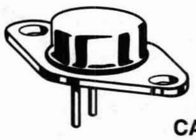

CASE 80-02
(TO-213AA)

Table 11 — Metal TO-213 (Formerly TO-66)

I_C Cont Amps Max	$V_{CEO(sus)}$ Volts Min	Device Type		h_{FE} Min/Max	@ I_C Amp	Resistive Switching			f_T MHz Min	P_D (Case) Watts @ 25°C
		NPN	PNP			t_s µs Max	t_f µs Max	@ I_C Amp		
1	80	2N4912		20/100	0.5	0.6 typ	0.3 typ	0.5	3	25
	225	2N3738		40/200	0.1	3 typ	0.3 typ	0.1	10	20
	300	2N3739		40/200	0.1	3 typ	0.3 typ	0.1	10	20
2	225		2N6211	10/100	1	2.5	0.6	1	20	35
	250	2N3584	2N6421	25/100	1	4	3	1	10	35
	300	 2N3585 2N4240	2N6212	10/100 25/100 30/150	1 1 0.75	2.5 4 6	0.6 3 3	1 1 0.75	20 10 15	35 35 35
	350		2N6213	10/100	1	2.5	0.6	1	20	35
3	140	2N3441		25/100	0.5				0.2	25
4	60	 2N3054,A 2N3766 2N6294[2]	2N3740 2N6296[2]	30/100 25/100 40/160 750/18k	0.25 0.5 0.5 2	1.3 typ 1 typ 0.9 typ 0.9 typ	0.27 typ 0.3 typ 0.09 typ 0.7 typ	0.25 0.5 0.5 2	4 3 10 4[1]	25 75 20 50
	80	 2N3767 2N6295[2][6]	2N3741 2N6297[2][6]	30/100 40/160 750/18k	0.25 0.5 2	1.3 typ 0.9 typ 0.9 typ	0.27 typ 0.09 typ 0.7 typ	0.25 0.5 2	4 10 4	25 20 50
5	80	2N4233A		25/100	1.5	0.5 typ	0.2 typ	1.5	4	75
	325	2N6235		25/125	1	3.5	0.5	1	20	50
7	60		2N6317	20/100	2.5	1	0.8	2.5	4	90
	80	2N5428		60/240	2	2	0.2	2	30	40
	100	 2N5430	2N6318	20/100 60/240	2.5 2	1 2	0.8 0.2	2.5 2	4 30	90 40
8	60	2N6300[2]	2N6298[2]	750/18k	4	1.5 typ	1.5 typ	4	4[1]	75
	80	2N6301[2][6]	2N6299[2][6]	750/18k	4	1.5 typ	1.5 typ	4	4[1]	75

(1) $|h_{fe}|$ @ 1 MHz
(2) Darlington
(6) Available as preferred chip

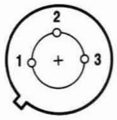

STYLE 1:
PIN 1. EMITTER
2. BASE
3. COLLECTOR
(Pin 3 connected to case)

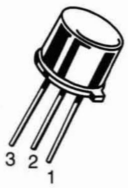

CASE 79-04
(TO-204AD)

Table 12 — Metal TO-205 (Formerly TO-39)

I_CCont Amps Max	$V_{CEO(sus)}$ Volts Min	Device Type		h_{FE} Min/Max	@ I_C Amp	Resistive Switching			f_T MHz Min	P_D (Case) Watts @ 25°C
		NPN	PNP			t_s µs Max	t_f µs Max	@ I_C Amp		
0.5	300		***MJ4646***	20 min	0.5	0.72*		0.05	40	5
	400		***MJ4647***	20 min	0.5	0.72*		0.05	30	5
3	40		***2N3719***	25/180	1	0.4*		1	60	6
			2N3867	40/200	1.5	0.4*		1.5	60	6
	60		***2N3720***	25/180	1	0.4*		1	60	6
			2N3868	30/150	1.5	0.4*		1.5	60	6
	80		***2N6303***	30/150	1.5	0.4*		1.5	60	6
5	80	***2N5336***	***2N6190***	30/120	2	2	0.2	2	30	6
		2N5337	***2N6191***	60/240	2	2	0.2	2	30	6
	100	***2N5338***		30/120	2	2	0.2	2	30	10
		2N5339	***2N6193***	60/240	2	2	0.2	2	30	6

* t_{off}

Devices listed in bold, italic are Motorola preferred devices.

Audio

GENERAL DESIGN CURVES FOR POWER AUDIO OUTPUT STAGES

$V_{(BR)CEO}$ Required on Output and Driver Transistors versus Output Power for 4, 8 and 18 Ohm Load

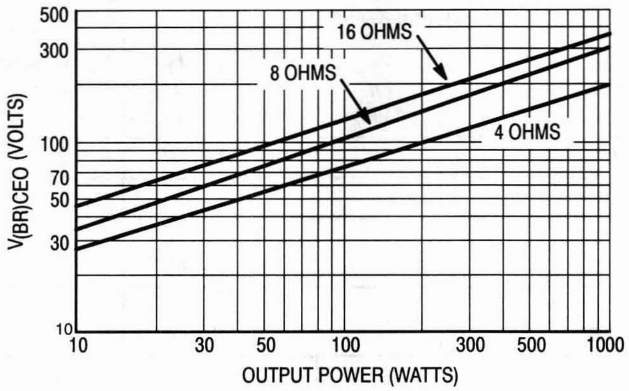

Output Transistor Peak Collector Current versus Output Power for 4, 8 and 16 Ohm Loads

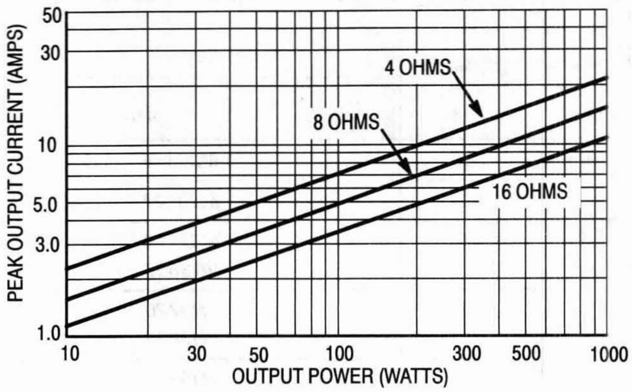

Another important parameter that must be considered before selecting the output transistors is the safe-operating area these devices must withstand. For a complete discussion on these see Application Notes AN484A and AN485.

Table 13 — Recommended Power Transistors for Audio/Servo Loads

RMS Power Output	NPN	PNP	Case	P_D Watts @ 25°C	V_{CEO}	h_{FE} @ Min/Max	I_C Amps	f_T MHz Typ	ISB Volts/Amps
To 25W	MJE15030	MJE15031	TO-220	50	150	20 min	4	70	14/3.6
25 to 50W	2N3055A	MJ2955A	TO-204	120	120	20/70	4	3	60/2
	MJ15001	MJ15002	TO-204	200	140	25/150	4	3	40/5
50 to 100W	MJ15015	MJ15016	TO-204	180	120	20/70	4	3	60/3
	MJ15003	MJ15004	TO-204	250	140	25/150	5	3	100/1
	MJ15020	MJ15021	TO-204	150	250	30 min	1	20	50/3
Over 100W	MJ15024	MJ15025	TO-204	250	250	15/60	8	8	80/2.2
	2SC3298B	2SA1306B	221H-01	20	200	70/240	0.1	100	55/0.2
	2SC3281	2SA1302	340G-01	150	200	35 min	8	30	70/2

The Power Transistors shown are provided for reference only and show device capability. The final choice of the Power Transistors used is left to the circuit designer and depends upon the particular safe-operating area required and the mounting and heat sinking configuration used.

CRT Deflection

A new family of SCANSWITCH™ bipolar power transistors, containing state-of-the-art application specific die, and a series of damper diodes have been designed for high and very high resolution horizontal deflection circuits. The horizontal output transistors minimize fall time, storage time and dynamic desaturation; turn-off energy is specified for optimum design considerations. The power rectifiers, designed for use as damper diodes in horizontal deflection circuits, are enhanced for turn-on overshoot voltage and forward recovery time. Overall circuit performance is optimized when these damper diodes are paired with their specific horizontal output transistors.

DYNAMIC DESATURATION

A large amount of power dissipation in horizontal deflection output circuitry occurs during the transistor's turn-off. Most of this dissipation happens as the collector-emitter voltage rises during storage time. Since there is a tendency for the voltage waveform to be soft and rounded as opposed to abrupt and square. The parameter used to describe this behavior is dynamic desaturation and is shown in Figure A as the area below the dashed line. The SCANSWITCH series of transistors has been designed to minimize dynamic desaturation and simultaneously avoid collector current tailing.

OPTIMIZED BASE DRIVE

The base drive can be optimized to take full advantage of the advanced device design of the SCANSWITCH series of transistors. The five conditions necessary for optimization are:

1) Provide adequate drive just prior to turn-off to minimize dynamic desaturation.
2) Avoid overdrive during any portion of the turn-on time to avoid collector current tailing.
3) Provide reverse base current that is independent of forward base current so full transistor performance can be realized.
4) Provide for a controlled rate of transition from forward to reverse drive to avoid tailing.
5) Avalanche the base-emitter junction during fall time.

Typical techniques for driving horizontal outputs use a base drive waveform which results in overdrive at turn-on and underdrive just prior to turn-off. An optimized base drive is one with the same forced gain throughout the turn-on period. A comparison of the two drives is shown in Figure B.

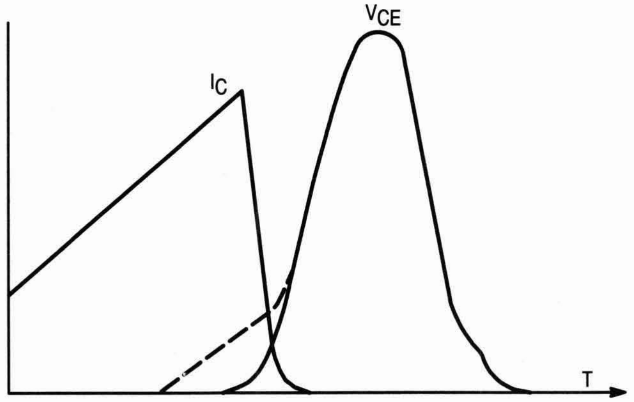

Figure A. Dynamic Desaturation

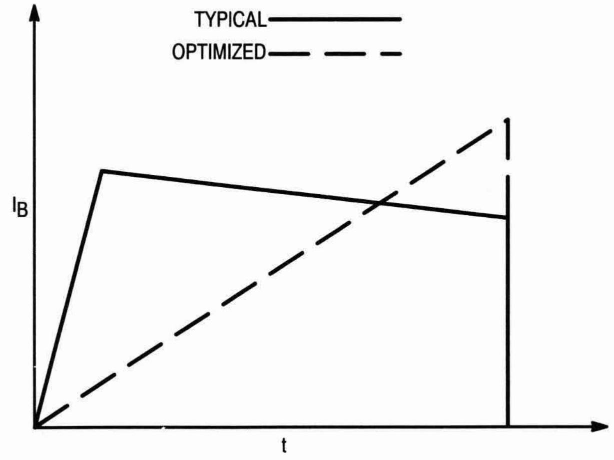

Figure B. Base Drive Comparison

Table 14 — Horizontal CRT Deflection Transistor Selector Guide

	Monitor Description	Horizontal Scan Freq.	CRT Size	Pixel Size	Transistor	Diode
MONOCHROME	Low Resolution to Mid Resolution	15–50 kHz	12–15 in.	>1024 x 768	MJE/MJF16204 MJE/MJF16205(15) MJ12004	MUR860E MUR880E
MONOCHROME	High Resolution	50–100 kHz	15–19 in.	>2000 x 1600	MJF/MJH16206 MJF/MJW16210 MJF/MJW16212	MR/MUR10100E MR/MUR10120E MR/MUR10150E
MONOCHROME	Ultra-High Resolution	>100 kHz	19–24 in.	>2000 x 2000	MJF16214(15) MJF16216(15) MJF16218(15)	MR/MUR10100E MR/MUR10120E MR/MUR10150E
COLOR	Low Resolution	15–22 kHz	12–15 in.	>320 x 200	BU1508AF BU1508ADF(15)	MUR05150E
COLOR	Mid Resolution	22–50 kHz	12–15 in.	>1024 x 768	BU1508AF BU1508ADF(15)	MUR05150E
COLOR	High Resolution	50–90 kHz	17–27 in.	>1280 x 1024	MJF/MJH16206 MJF/MJW16210 MJF/MJW16212	MR/MUR10100E MR/MUR10120E MR/MUR10150E
COLOR	Ultra-High Resolution	>90 kHz	17–27 in.	1600 x 1280	MJF/MJW16210(17) MJF/MJW16218(15)	MUR8100E(17) MR/MUR10150E

(15) To be introduced
(17) Use two in parallel

Motorola AIEG Power MOSFET Modules in the TO-240 Package

Motorola AIEG offers the N-Channel MOSFET modules in the TO-240 package. The modules are designed in common source or half-bridge circuit configurations for higher power switching applications such as power supplies, UPS systems and power inverters. The voltage ranges from 200 Volts to 500 Volts and the current ranges from 20 Amps to 45 Amps. The package provides 2500 Vac RMS electrical isolation to the heat sink and is UL recognized.

Additional application specific circuits will be considered where customer requirements and volume dictates.

TABLE 1 — POWER MOSFET MODULES (TO-240)

Max V_{DSS} Volts	Max $R_{DS(on)}$ Ohms	Max $I_{D(cont)}$ Amps*	Device	Conditions I_D Amps	Conditions V_{GS} Volts	Circuit Configuration	Module Type
500	0.14	20	MT40B3Y50	20	10	3Y	Dual
			MT40BY50			Y	
400	0.1	25	MT50B3Y40	25	10	3Y	Dual
			MT50BY40			Y	
200	0.026	45	MT90B3Y20	45	10	3Y	Dual
			MT90BY20			Y	

* Device current rating per leg.

N-CHANNEL MOSFET CIRCUIT CONFIGURATIONS

3Y — COMMON SOURCE

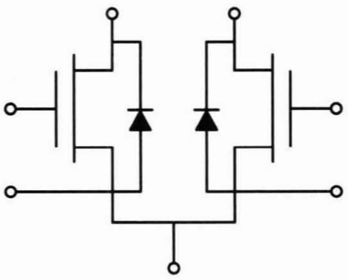

Y — HALF-BRIDGE

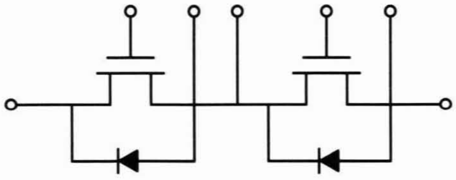

Note: Additional information about the TO-240 MOSFET is available from the Motorola Automotive & Industrial Group, 4000 Commercial Ave., Northbrook, IL 60062. Phone: (708) 480-8111.

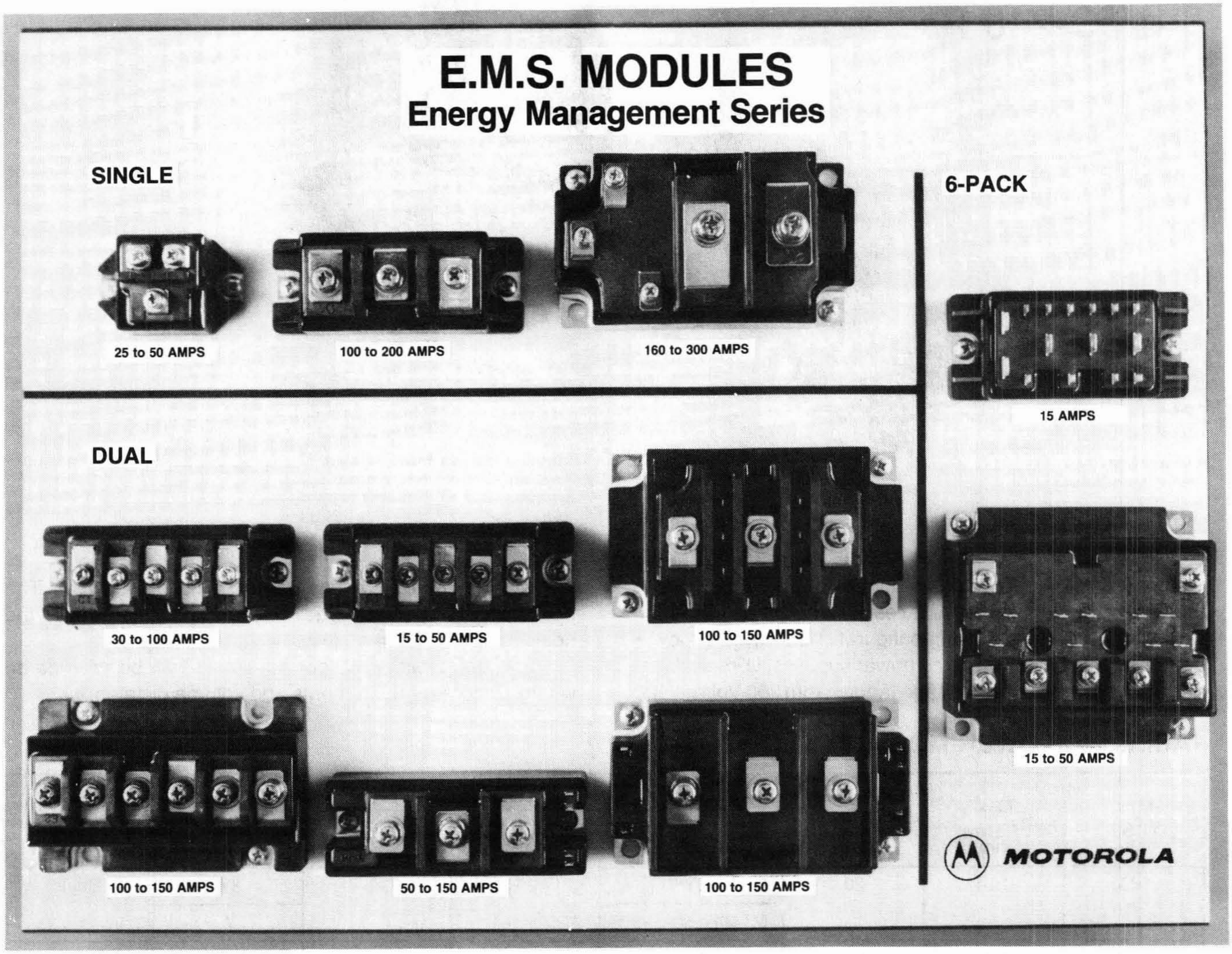

Energy Management Series

Motorola has taken the familiar Darlington (high voltage) and Tri-Stage (still higher voltage) transistor structures and encased them in modules with a variety of conveniently accessible terminal arrangements to provide power switching capabilities ranging as high as 400 amps, 1200 volts and 1600 watts. What's more, the available selection includes singles, duals and "six-pack" structures, with 4-pack configurations available on special order.

The modules provide functional selectivity for line-operated PWM, six-step motor control systems and other industrial applications requiring high power switching capabilities. They incorporate electrical isolation between the terminals and the heat-sink mounting surface, and are capable of meeting UL, CSA, and VDE requirements in most applications. Most devices are UL recognized.

Transistor structures include bipolar devices for highest power, Insulated Gate Bipolar Transistors (IGBT's) devices for increased switching speed, and Power MOSFET transistors for highest speed with more limited voltage/current capabilities.

E.M.S. Modules (continued)

TABLE 1 — BIPOLAR DARLINGTON TRANSISTOR

Module Type	Max I_C(cont) Amps	$V_{CEX(sus)}$ Volts	$V_{CEO(sus)}$ Volts	Motorola Type	h_{FE} Min	V_{CE} = 5 V	Max. Resistive Switching				P_D T_C = 25°C Watts	Case No.	Circuit Config.
						I_C Amps	t_{on} µs	t_{stg} µs	t_f µs	@ I_C(A)			
Single	50	600	450	MJ50AB45 ЯU	100	50	1	12	2	50	300	C.F.	B
Single	50	1000	880	MJ50AC100 ЯU	100	50	2	20	5	50	350	373-01	K
Single	100	600	450	MJ100AA45	100	100	1	12	2	100	600	807A-03	A
Single	200	600	550	MJ200AA55 ЯU	80	200	2	12	4	200	800	807A-03	A
Single	200	600	550	MJ200AF55 ЯU	80	200	2	12	4	200	800	414-01	F
Single	200	1000	880	MJ200AV100 ЯU	100	200	2	15	5	200	1400	812-02	V
Single	200	1200	900	MJ200AV120 ЯU	100	200	2	13	4	200	1400	812-02	V
Single	300	600	550	MJ300A2F55 ЯU	80	300	2	12	5	300	1400	812-02	2F
Single	300	1000	880	MJ300AV100 ЯU	100	300	2	15	5	300	1600	812-02	V
Single	300	1200	900	MJ300AV120 ЯU	100	300	4	12	5	300	1600	812-02	V
Single	400	600	550	MJ400A2F55 ЯU	80	400	4	12	4	400	1600	812-02	2F
Dual	25	1000	880	MJ25BX100A	100	25	2	15	5	25	300 x 2	C.F.	X
Dual	40	1400	1000	MJ40BX140 ЯU	100	40	2	17	3	40	400 x 2	816-02	X
Dual	50	600	450	MJ50B2D45 ЯU	100	50	1	12	2	50	300 x 2	813-02	2D
Dual	50	1000	880	MJ50BX100 ЯU	100	50	2	15	5	50	350 x 2	813-02	X
Dual	50	1000	880	MJ50BX100A	100	50	2	15	5	50	350 x 2	C.F.	X
Dual	50	1200	900	MJ50BX120 ЯU	100	50	2	13	4	50	350 x 2	813-02	X
Dual	75	600	450	MJ75BD45	80	75	2	12	2	75	350 x 2	807-03	D
Dual	75	600	450	MJ75BE45 ЯU	80	75	2	12	2	75	350 x 2	C.F.	E
Dual	75	600	500	MJ75B2D50 ЯU	80	75	2	12	4	75	350 x 2	813-02	2D
Dual	75	1000	880	MJ75BX100 ЯU	100	75	2	15	5	75	400 x 2	816-02	X
Dual	75	1200	900	MJ75BX120 ЯU	100	75	3	12	5	75	400 x 2	816-02	X
Dual	80	1400	1000	MJ80BX140	100	80	2	17	3	80	800 x 2	814-02	X
Dual	100	600	450	MJ100BD45	100	100	2	12	2	100	400 x 2	807-03	D
Dual	100	600	450	MJ100B3D45 ЯU	100	100	2	12	2	100	400 x 2	814A-02	3D
Dual	100	600	550	MJ100BE55 ЯU	80	100	2	12	4	100	400 x 2	819-02	E
Dual	100	1000	880	MJ100BX100 ЯU	100	100	2	15	5	100	700 x 2	814-02	X
Dual	100	1200	900	MJ100BX120 ЯU	100	100	2	13	4	100	700 x 2	814-02	X
Dual	150	600	550	MJ150BE55	80	150	2	12	5	150	700 x 2	819-02	E
Dual	150	600	550	MJ150B3D55 ЯU	80	150	3	12	5	150	700 x 2	814A-02	3D
Dual	150	1000	880	MJ150BK100 ЯU	100	150	2	15	5	150	800 x 2	808-01	K
Dual	150	1000	880	MJ150BX100 ЯU	100	150	2	15	5	150	800 x 2	814-02	X
Dual	150	1200	900	MJ150BX120A	130	150	3	12	5	150	800 x 2	814-02	X
6-Pack	15	600	450	MJ15FG45 ЯU	100	15	1	12	2	15	100 x 6	809-02	G
6-Pack	15	1100	900	MJ15FL110 ЯU	100	15	2	11	6	15	150 x 6	C.F.	L
6-Pack	20	600	450	MJ20FG45 ЯU	100	20	1	12	2	20	125 x 6	809-02	G
6-Pack	25	1100	900	MJ25FL110 ЯU	100	25	2	14	6	25	300 x 6	C.F.	L
6-Pack	30	600	450	MJ30FG45 ЯU	100	30	1	12	2	30	250 x 6	C.F.	G
6-Pack	50	600	450	MJ50FG45 ЯU	100	50	1	12	2	50	300 x 6	C.F.	G
6-Pack	50	600	450	MJ50FG45B ЯU	100	50	1	12	2	50	300 x 6	C.F.	G
6-Pack	75	600	450	MJ75FG45	80	75	2	12	3	75	350 x 6	C.F.	G

TABLE 2 — POWER MOSFET

Module Type	Max I_D(cont) Amps	Max V_{DSS} Volts	Motorola Type	Max $R_{DS(on)}$ Ohms	Conditions		C_{iss} pF	Max. Resistive Switching						P_D T_C = 25°C Watts	Case No.	Circuit Config.
					I_D Amps	V_{GS} Volts		t_r µs	t_{on} µs	t_s µs	t_f µs	Conditions I_D(A)	Conditions V_{GS}(V)			
Dual	50	450	MT50B2Y45	0.14	50	10	13000	0.7	0.8	0.2	1.3	50	10	400 x 2	C.F.	2Y
Dual	50	450	MT50BY45	0.14	50	10	13000	0.7	0.8	0.2	1.3	50	10	400 x 2	816-02	Y
Dual	50	500	MT50B2Y50	0.13	50	10	9600	0.8	1	0.25	0.7	50	10	400 x 2	C.F.	2Y
Dual	50	500	MT50BY50	0.13	50	10	9600	0.8	1	0.25	0.7	50	10	400 x 2	816-02	Y
6-Pack	8	450	MT8FR45	0.75	8	10	3100	0.4	0.5	0.25	1	8	10	100 x 6	809-02	R
6-Pack	15	450	MT15FR45 ЯU	0.4	15	10	4500	0.5	0.6	0.5	2	15	10	125 x 6	809-02	R
6-PakSIP	15	250	MPM6702	0.25	15	10	2000	0.6	0.8	0.2	0.8	15	10	70 x 6	C.F.	R

ЯU : UL Recognized

E.M.S. Modules (continued)

TABLE 3 — INSULATED GATE BIPOLAR TRANSISTORS (IGBT)

Module Type	Max $I_{D(cont)}$ Amps	Max V_{CES} Volts	Motorola Type	Max V_{CE} Volts	Conditions I_C Amps	Conditions V_G Volts	C_{ies} pF	Max. Resistive Switching t_r µs	t_{on} µs	t_f µs	t_{off} µs	Conditions I_C(A)	Conditions V_{GS}(V)	P_D T_C=25°C Watts	Case No.	Circuit Config.
Single	25	1000	**MG25AU100**	5	25	15	3000	1	1	1	2	25	15	150	373-01	U
Single	50	500	**MG50AU50**	5	50	15	3000	1	1	1	1.5	50	15	150	C.F.	U
Single	50	1000	**MG50AU100**	5	50	15	7200	1	1	1	1.5	50	15	300	373-01	U
Single	100	500	**MG100AU50**	5	100	15	7200	1.5	1.5	1	1.5	100	15	300	C.F.	U
Single	200	1000	**MG200A2U100** (UL)	5	200	15	30000	1.5	2	1	2	200	15	1200	C.F.	2U
Single	200	1200	**MG200A2U120** (UL)	4	200	15	31200	0.6	0.8	0.5	1.5	200	15	1200	C.F.	2U
Single	300	1000	**MG300A2U100** (UL)	5	300	15	38000	1.5	2	1	2	300	15	1400	C.F.	2U
Single	300	1200	**MG300A2U120** (UL)	4	300	15	42000	0.6	0.8	0.5	1.5	300	15	1400	C.F.	2U
Single	300	1200	**MG300A2U120L** (UL)	2.7	300	15	42000	0.6	0.8	1	1.8	300	15	1400	C.F.	2U
Single	400	600	**MG400A2U60L** (UL)	2.7	400	15	26000	0.6	0.8	1	1.6	400	15	1400	C.F.	2U
Single	400	600	**MG400A2U60** (UL)	4	400	15	33000	0.6	0.8	0.35	1	400	15	1400	C.F.	2U
Single	400	1200	**MG400A2U120** (UL)	4	400	15	59000	0.6	0.8	0.5	1.5	400	15	1600	C.F.	2U
Single	400	1200	**MG400A2U120L** (UL)	2.7	400	15	59000	0.6	0.8	1	1.8	400	15	1600	C.F.	2U
Single	400	1200	**MG400A2U120LR** (UL)	2.7	400	15	59000	0.6	0.8	1	1.8	400	15	1600	C.F.	2U
Dual	15	1000	**MG15BZ100**	5	15	15	2000	1	1	1	2	15	15	125 x 2	813-02	Z
Dual	25	500	**MG25BZ50** (UL)	5	25	15	1500	1	1	1	1.5	25	15	125 x 2	813-02	Z
Dual	25	1000	**MG25BZ100** (UL)	5	25	15	3000	1	1	1	2	25	15	200 x 2	813-02	Z
Dual	25	1200	**MG25BZ120A90** (UL)	4	25	15	3000	0.6	0.8	0.5	1.5	25	15	200 x 2	C.F.	Z
Dual	50	1200	**MG50BZ120A** (UL)	4	50	15	7800	0.6	0.8	0.5	1.5	50	15	300 x 2	C.F.	Z
Dual	50	500	**MG50BZ50** (UL)	5	50	15	3000	1	1	1	1.5	50	15	300 x 2	813-02	Z
Dual	50	600	**MG50BZ60** (UL)	4	50	15	3500	0.6	0.8	0.4	1	50	15	250 x 2	813-02	Z
Dual	50	600	**MG50BZ60AL** (UL)	2.7	50	15	3500	0.6	0.8	1	1.6	50	15	250 x 2	C.F.	Z
Dual	50	1000	**MG50BZ100** (UL)	5	50	15	7200	1	1	1	1.5	50	15	300 x 2	813-02	Z
Dual	75	500	**MG75BZ50**	5	75	15	5600	1.5	1.5	1	1.5	75	15	350 x 2	813-02	Z
Dual	75	600	**MG75BZ60** (UL)	4	75	15	6000	0.6	0.8	0.4	1	75	15	350 x 2	813-02	Z
Dual	75	1000	**MG75BZ100**	5	75	15	9500	1	1	1	2	75	15	400 x 2	816-02	Z
Dual	75	1200	**MG75BZ120** (UL)	4	75	15	10500	0.6	0.8	0.5	1.5	75	15	400 x 2	816-02	Z
Dual	100	500	**MG100BZ50** (UL)	5	100	15	7200	1.5	1.5	1	1.5	100	15	400 x 2	813-02	Z
Dual	100	600	**MG100BZ60** (UL)	4	100	15	8200	0.6	0.8	0.4	1	100	15	400 x 2	813-02	Z
Dual	100	600	**MG100BZ60AL** (UL)	2.7	100	15	6500	0.6	0.8	1	1.6	100	15	400 x 2	C.F.	Z
Dual	100	1000	**MG100BZ100** (UL)	5	100	15	15000	1	1	2	1	100	15	600 x 2	814B-01	Z
Dual	100	1200	**MG100BZ120** (UL)	4	100	15	15600	0.6	0.8	0.5	1.5	100	15	600 x 2	C.F.	Z
Dual	150	500	**MG150BZ50**	5	150	15	11000	1.5	1.5	1	1.5	150	15	700 x 2	C.F.	Z
Dual	150	600	**MG150BZ60**	4	150	15	12000	0.6	0.8	0.4	1	150	15	700 x 2	C.F.	Z
Dual	150	1000	**MG150BZ100** (UL)	5	150	15	19000	1.5	2	1	2	150	15	800 x 2	C.F.	Z
Dual	150	1200	**MG150BZ120** (UL)	4	150	15	21000	0.6	0.8	0.5	1.5	150	15	800 x 2	C.F.	Z
Dual	150	1200	**MG150BZ120L**	2.7	150	15	21000	0.6	0.8	1	1.8	150	15	800 x 2	C.F.	Z
Dual	200	500	**MG200BZ50**	5	200	15	15000	1.5	1.5	1	1.5	200	15	800 x 2	C.F.	Z
Dual	200	600	**MG200BZ60**	4	200	15	16000	0.6	0.8	0.4	1	200	15	800 x 2	C.F.	Z
6-Pack	8	1000	**MG8F2R100**	5	8	15	800	0.8	1	1	1.4	8	15	80 x 6	C.F.	2R
6-Pack	15	1000	**MG15F2R100**	5	15	15	2000	1	1	1	2	15	15	125 x 6	C.F.	2R

(UL) : UL Recognized

E.M.S. Circuits

Bipolar Transistors

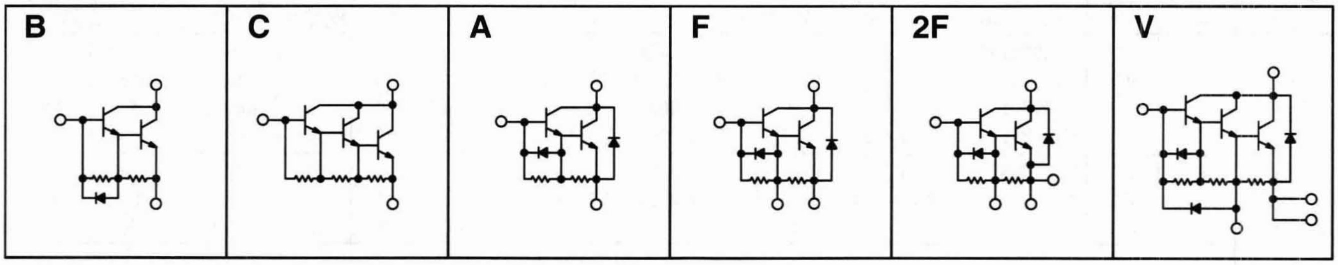

E.M.S. Modules — E.M.S. Circuits (continued)

Bipolar Transistors — continued

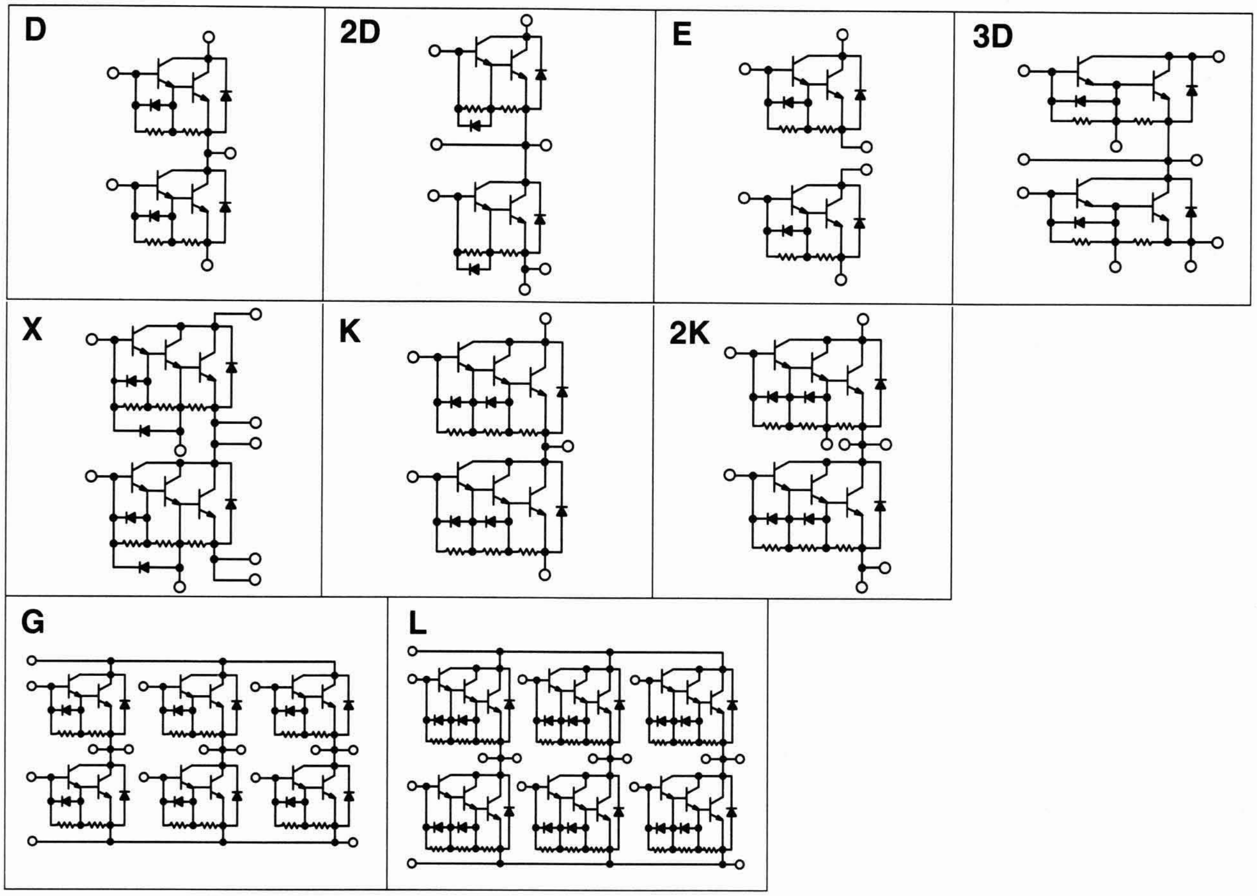

Power MOSFETs

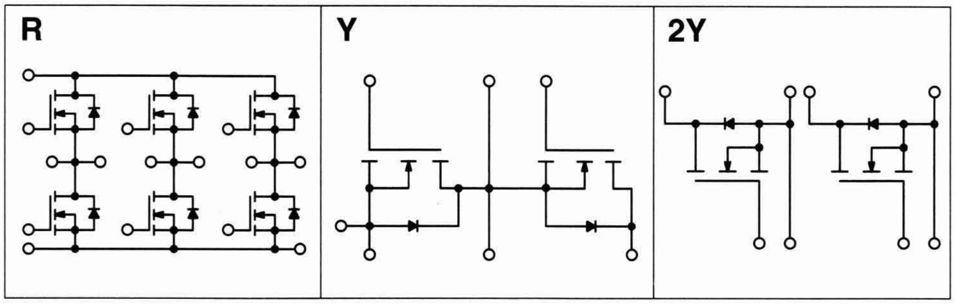

IGBTs

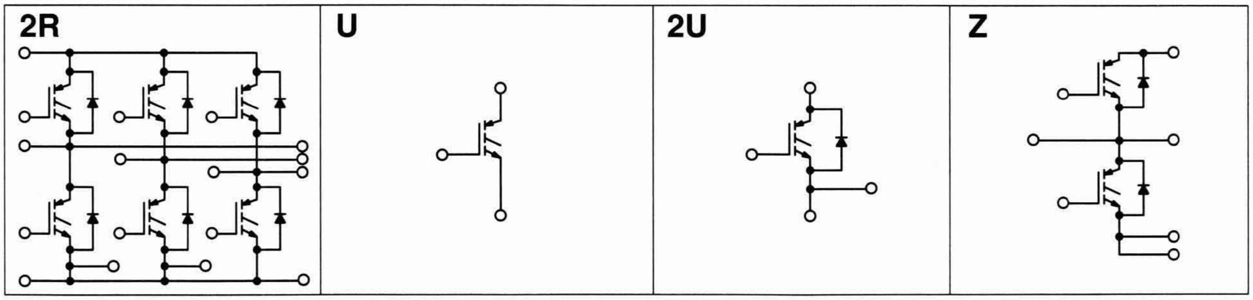

Rectifiers

In Brief . . .

Continuing investment in research and development for discrete products has led to a rectifier manufacturing facility that matches the precision and versatility of the most advanced integrated circuits. As a result, Motorola's silicon rectifiers span all applications categories with quality levels capable of passing the most stringent environmental tests – including those for automotive under-hood applications.

Product Highlights:

- Application specific rectifiers — SCANSWITCH™ devices for high resolution monitors, MEGAHERTZ™ series rectifiers for high frequency switching power supplies and automotive transient suppressors.
- Schottky rectifiers for low voltage (15 to 200 volts), high current (to 600 amps) requirements in switching power supplies.
- Fast and Ultrafast rectifiers with reverse recovery times as low as 25 ns to complement the Schottky devices for higher voltage requirements in high frequency applications.
- A full line of low-cost, general-purpose rectifiers with forward currents from 1 to 50 amps and breakdown voltages from 50 to 1000 volts.
- A wide variety of package options to match virtually any potential requirement.

Page

Application Specific Rectifiers 5.4-2
Schottky (High Speed, Low Voltage) 5.4-3
Ultrafast Recovery 5.4-8
Fast Recovery 5.4-11
General Purpose 5.4-13

Application Specific Rectifiers

The focus for Rectifier Products continues to be on Schottky and Ultrafast technologies, with process and packaging improvements to achieve greater efficiency in high frequency switching power supplies, high current mainframe supplies, and high resolution monitors. Our new product thrust is intended to be more "application specific" than in the past, while continuing to strive for broad market acceptance.

MEGAHERTZ Series — This group of Schottky and Ultrafast rectifiers are designed to provide improved efficiency in very high frequency switching power supplies with low V_F (0.41 volts), high voltage (to 200 volts) Schottkys and faster Ultrafast (t_{rr} = 28 nsec.).

Table 1 — MEGAHERTZ

Device	I_O (Amps)	V_{RRM} (Volts)	Maximum V_F @ Rated I_O and Temp. (Volts)	Maximum I_R @ Rated V_{RRM} / 25°C (mAmps)	t_{rr} (Nanosecond)
MBR2030CTL	20	30	0.48	5	(5)
MBR2535CTL	25	35	0.41	20	(5)
MBR20200CT	20	200	0.9	1	(5)
MURH840CT	8	400	1.7	0.01	28
MURH860CT	8	600	2.0	0.01	28

(5) Schottky barrier device.

SCANSWITCH Series — This group of Fast and Ultrafast rectifiers are designed for improved performance in very high resolution monitors and work stations where forward recovery time (t_{fr}) and high voltage (1200–1500 volts) are primary considerations.

Table 2 — SCANSWITCH

Device	I_O (Amps)	V_{RRM} (Volts)	Maximum t_{fr} (Nanosecond)	Maximum t_{rr} (Nanosecond)	Maximum V_{RFM}(6) (Volts)
MUR5150E	5	1500	225	175	20
MR10120E	10	1200	175	1000	14
MUR10120E	10	1200	175	175	14
MR10150E	10	1500	175	1000	16
MUR10150E	10	1500	175	175	16

(6) V_{RFM} = Maximum Transient Overshoot Voltage.

Automotive transient suppressors are designed for protection against over-voltage conditions in the auto electrical system including the "LOAD DUMP" phenomenon that occurs when the battery open circuits while the car is running.

Table 3 — Automotive Transient Suppressors

Device	I_O (Amps)	V_{RRM} (Volts)	$V_{(BR)}$ (Volts)	I_{RSM}(7) (Amps)	T (°C)
MR2535L	35	20	24–32	110	175

(7) Time constant = 10 ms, Duty Cycle ≤ 1%, T_C = 25°C.

Devices listed in bold, italic are Motorola preferred devices.

Schottky Rectifiers

SWITCHMODE™ Schottky power rectifiers with the high speed and low forward voltage drop characteristic of Schottky's metal/silicon junctions are produced with ruggedness and temperature performance comparable to silicon-junction rectifiers. Ideal for use in low-voltage, high-frequency power supplies, and as very fast clamping diodes, these devices feature switching times less than 10 ns, and are offered in current ranges from 1 to 600 amperes, and reverse voltages to 200 volts.

In some current ranges, devices are available with junction temperature specifications of 125°C, 150°C, 175°C. Devices with higher T_J ratings can have significantly lower leakage currents, but higher forward-voltage specifications. These parameter tradeoffs should be considered when selecting devices for applications that can be satisfied by more than one device type number.

All devices are connected cathode-to-case or cathode-to-heatsink, where applicable. Reverse polarity may be available on some devices upon special request. Contact your Motorola representative for more information.

Table 4 — Schottky Rectifiers

	I_O, AVERAGE RECTIFIED FORWARD CURRENT (Amperes)(1)							
	1		3				5	6
V_{RRM} (Volts)	59-04 Plastic Cathode = Polarity Band	403A-03 SMB Cathode = Notch	267-03 Plastic Cathode = Polarity Band		403-03 SMC Cathode = Notch	369A-10 DPAK Style 3	60-01 Metal Style 1	369A-10 DPAK Style 3 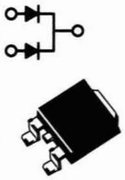
20	1N5817	MBRS120T3	1N5820	MBR320	MBRS320T3	MBRD320	1N5823	MBRD620CT
25								
30	1N5818	MBRS130T3	1N5821	MBR330	MBRS330T3	MBRD330	1N5824	MBRD630CT
35								
40	***1N5819***	***MBRS140T3***	***1N5822***	***MBR340***	***MBRS340T3***	***MBRD340***	***1N5825***	***MBRD640CT***
45								
50	MBR150			MBR350		MBRD350		MBRD650CT
60	***MBR160***			***MBR360***		***MBRD360***		***MBRD660CT***
70	MBR170	MBRS170T3		MBR370				
80	MBR180	MBRS180T3		MBR380				
90	MBR190	MBRS190T3		MBR390				
100	***MBR1100***	***MBRS1100T3***		***MBR3100***				
I_{FSM} (Amperes)	25	40	80	80	80	75	500	75
Max V_F @ $I_{FM} = I_O$	0.6(2) $T_L = 25°C$	0.6(2) $T_C = 25°C$	0.525(2) $T_L = 25°C$	0.74(2) $T_L = 25°C$	0.525(2) $T_L = 25°C$	0.45 $T_C = 125°C$	0.38(2) $T_C = 25°C$	0.85 $T_C = 125°C$
T_J (Max) °C	125	125	125	150	125	150	125	150

(1) I_O is total device output current.
(2) Values are for 40 volt units, lower voltage parts exhibit lower V_F.

Devices listed in bold, italic are Motorola preferred devices.

SCHOTTKY RECTIFIERS (continued)

There are many other standard features in Motorola Schottky rectifiers that give added performance and reliability.

1. GUARDRINGS are included in all Schottky die for reverse voltage stress protection from high rates of dv/dt to virtually eliminate the need for snubber networks. The guardring also operates like a zener and avalanches when subjected to voltage transients.

2. MOLYBDENUM DISCS on both sides of the die minimize fatigue from power cycling in all metal products. The plastic TO-220 devices have a special solder formulation for the same purpose.

3. QUALITY CONTROL monitors all critical fabrication operations and performs selected stress tests to assure constant processes.

Table 4 — Schottky Rectifiers (continued)

V_{RRM} (Volts)	I_O, AVERAGE RECTIFIED FORWARD CURRENT (Amperes)(1)							
	7.5	10	15		16	20	25	
	221B-01 (TO-220AC) Style 1		221A-06 (TO-220AB) Style 6	56-03 (DO-203AA) Style 2	221B-01 (TO-220AC) Style 1	221A-06 (TO-220AB) Style 6	56-03 (DO-203AA) Style 2	
15						MBR2015CTL		
20				1N5826			1N5829	
30				1N5827		***MBR2030CTL***	1N5830	1N6095
35	MBR735	MBR1035	MBR1535CT		MBR1635	MBR2035CT ***MBR2535CTL***		
40				***1N5828***			***1N5831***	***1N6096***
45	***MBR745***	***MBR1045***	***MBR1545CT***		***MBR1645***	***MBR2045CT***		
50								
60		***MBR1060***				***MBR2060CT***		
70		MBR1070				MBR2070CT		
80		MBR1080				MBR2080CT		
90		MBR1090				MBR2090CT		
100		***MBR10100***				***MBR20100CT***		
200						***MBR20200CT***		
I_{FSM} (Amperes)	150	150	150	500	150	150	800	400
Max V_F @ $I_{FM} = I_O$	0.57 T_C = 125°C	0.57 T_C = 125°C	0.72 T_C = 125°C	0.5 T_C = 125°C	0.57 T_C = 125°C	0.72(2) T_C = 125°C	0.48(2) T_C = 25°C	0.86 @ 78.5 A T_C = 70°C
T_J (Max) °C	150	150	150	150	150	150	125	150

(1) I_O is total device output current.

(2) Values are for 40 volt units, lower voltage parts exhibit lower V_F.

Devices listed in bold, italic are Motorola preferred devices.

Table 4 — Schottky Rectifiers (continued)

V_{RRM} (Volts)	I_O, AVERAGE RECTIFIED FORWARD CURRENT (Amperes)[1]							
	25	**30**					**35**	**40**
	221D-02 ISOLATED TO-220 Style 3 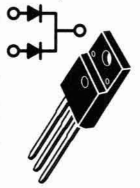	11-03 (TO-204AA) Style 4 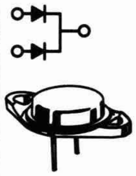	221A-06 (TO-220AB) Style 6 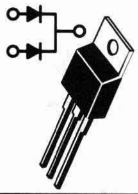	340E-01 (TO-218) Style 1 	340D-01 (TO-218AC) Style 2 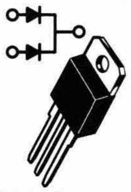	340F-03 (TO-247) Style 2 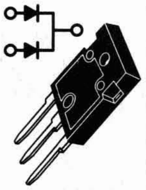	56-03 (DO-203AA) Style 2 	257-01 (DO-203AB) Style 2
15								
20		MBR3020CT					MBR3520	1N5832
25								
30								1N5833
35	MBRF2535CT	MBR3035CT	MBR2535CT		MBR3035PT	MBR3035WT	MBR3535	
40								***1N5834***
45	***MBRF2545CT***	***MBR3045CT*** ***SD241***	***MBR2545CT***	***MBR3045***	***MBR3045PT***	***MBR3045WT***	***MBR3545*** ***SD41***	
50								
60								
70								
80								
90								
100								
I_{FSM} (Amperes)	150	400	300	300	400	350	600	800
Max V_F @ $I_{FM} = I_O$	0.62 @ 12.5 A T_C = 125°C	0.72 T_C = 125°C	0.73 T_C = 125°C	0.62 T_C = 100°C	0.72 T_C = 125°C	0.72 T_C = 125°C	0.55 T_C = 25°C	0.59 T_C = 25°C
T_J (Max) °C	150	150	150	150	150	150	150	125

(1) I_O is total device output current.

Devices listed in bold, italic are Motorola preferred devices.

SCHOTTKY RECTIFIERS (continued)

Table 4 — Schottky Rectifiers (continued)

V_{RRM} (Volts)	I_O, AVERAGE RECTIFIED FORWARD CURRENT (Amperes)(1)						
	50		60		65	75	80
	257-01 (DO-203AB) Style 2	340E-01 (TO-218) Style 1	257-01 (DO-203AB) Style 2				
15				MBR6015L			
20				MBR6020L			
25		***MBR5025L***		MBR6025L			
30	1N6097			***MBR6030L***			
35			MBR6035		MBR6535	MBR7535	MBR8035
40	***1N6098***						
45			***MBR6045*** ***SD51***		***MBR6545***	***MBR7545***	***MBR8045***
50							
60							
70							
80							
90							
100							
I_{FSM} (Amperes)	800	500	800	1000	800	1000	1000
Max V_F @ $I_{FM} = I_O$	0.86 @ 157 A T_C = 70°C	0.65(2) T_C = 150°C	0.6(2) T_C = 125°C	0.38 T_C = 150°C	0.62 T_C = 150°C	0.6(2) T_C = 125°C	0.59 T_C = 150°C
T_J (Max) °C	125	150	150	150	175	150	175

(1) I_O is total device output current.
(2) Values are for 40 volt units, lower voltage parts exhibit lower V_F.

Devices listed in bold, italic are Motorola preferred devices.

Table 4 — Schottky Rectifiers (continued)

V_{RRM} (Volts)	I_O, AVERAGE RECTIFIED FORWARD CURRENT (Amperes)(1)		
	120	200	300
	357C-02 POWERTAP™ Cathode = Mounting Plate Anode = Terminal 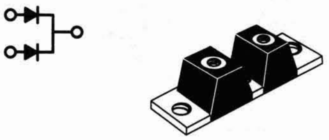		
15		MBR20015CTL	
20		MBR20020CTL	
25		MBR20025CTL	
30		***MBR20030CTL***	
35	MBR12035CT		MBR30035CT
40			
45	***MBR12045CT***		***MBR30045CT***
50	MBR12050CT		MBR30050CT
60	***MBR12060CT***		***MBR30060CT***
70			
80			
90			
100			
I_{FSM} (Amperes)	800	1500	2500
Max V_F @ $I_{FM} = I_O$	0.62 T_C = 175°C	0.48 T_C = 150°C	0.64 T_C = 125°C
T_J (Max) °C	175	175	175

(1) I_O is total device output current.

Devices listed in bold, italic are Motorola preferred devices.

Ultrafast Recovery Rectifiers

The Ultrafast Recovery Rectifiers, with reverse times of 25 to 100 nanoseconds, are expanding the SWITCHMODE rectifier family. They complement the broad array of Schottky devices for use in the higher voltage outputs and internal circuitry of switching power supplies as operating frequencies increase from 20 kHz to 250 kHz and beyond. Additional package styles and operating current levels are planned.

All devices are connected cathode-to-case or cathode-to-heatsink, except where noted. Contact your Motorola representative for more information.

Table 5 — Ultrafast Recovery Rectifiers

	I_O, AVERAGE RECTIFIED FORWARD CURRENT (Amperes)[1]							
	1		3		4	6		8
V_{RRM} (Volts)	59-04 Plastic Cathode = Polarity Band	403A-03 SMB Cathode = Notch	403-03 SMC Cathode = Notch	369A-10 DPAK Style 3 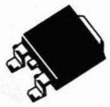	267-03 Plastic Cathode = Polarity Band	369A-10 DPAK Style 3 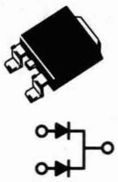	221A-06 (TO-220AB) Style 6	221B-01 (TO-220AC) Style 1
50	MUR105	MURS105T3	MURS305T3	MURD305	MUR405	MURD605CT	MUR605CT	MUR805
100	MUR110	MURS110T3	MURS310T3	MURD310	MUR410	MURD610CT	MUR610CT	MUR810
150	MUR115	MURS115T3	MURS315T3	MURD315	MUR415	MURD615CT	MUR615CT	MUR815
200	***MUR120***	***MURS120T3***	***MURS320T3***	***MURD320***	***MUR420***	***MURD620CT***	***MUR620CT***	***MUR820***
300	MUR130	MURS130T3	MURS330T3		MUR430			MUR830
400	MUR140	MURS140T3	MURS340T3		MUR440			MUR840
500	MUR150	MURS150T3	MURS350T3		MUR450			MUR850
600	***MUR160***	***MURS160T3***	***MURS360T3***		***MUR460***			***MUR860***
700	MUR170E				MUR470E			MUR870E
800	MUR180E				MUR480E			MUR880E
900	MUR190E				MUR490E			MUR890E
1000	***MUR1100E***				***MUR4100E***			***MUR8100E***
I_{FSM} (Amperes)	35	40	75	75	125	63	75	100
t_{rr} nsec	25/50/75	25/50	25/50	35	25/50/75	35	35	35/60/100
T_J (Max) °C	175	175	175	175	175	175	175	175

(1) I_O is total device output current.

Devices listed in bold, italic are Motorola preferred devices.

Table 5 — Ultrafast Recovery Rectifiers (continued)

V_{RRM} (Volts)	I_O, AVERAGE RECTIFIED FORWARD CURRENT (Amperes)[1]							
	8	15	16		25	30		
	221B-01 (TO-220AC) Style 1		221A-06 (TO-220AB) Style 6 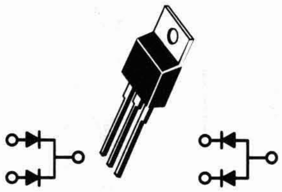		56-03 (DO-203AA) Style 2	340E-01 (TO-218) Style 1	340D-01 (TO-218AC) Style 2 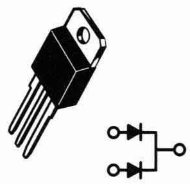	
50		MUR1505	MUR1605CT	MUR1605CTR	MUR2505		R710XPT	MUR3005PT
100		MUR1510	MUR1610CT	MUR1610CTR	MUR2510		R711XPT	MUR3010PT
150		MUR1515	MUR1615CT	MUR1615CTR	MUR2515			MUR3015PT
200		***MUR1520***	***MUR1620CT***	***MUR1620CTR***	***MUR2520***	***MUR3020***	***R712XPT***	***MUR3020PT***
300		MUR1530	MUR1630CT			MUR3030		MUR3030PT
400	***MURH840CT***	MUR1540	MUR1640CT			***MUR3040***	R714XPT	MUR3040PT
500		MUR1550	MUR1650CT					MUR3050PT
600	***MURH860CT***	***MUR1560***	***MUR1660CT***					***MUR3060PT***
700								
800								
900								
1000						***MUR30100E***		
I_{FSM} (Amperes)	100	200	200	100	500	300	150	400
t_{rr} nsec	28	35/60	35	35	50	100	100	35
T_J (Max) °C	175	175	175	175	175	175	150	175

(1) I_O is total device output current.

Devices listed in bold, italic are Motorola preferred devices.

ULTRAFAST RECOVERY RECTIFIERS (continued)

Table 5 — Ultrafast Recovery Rectifiers (continued)

V_{RRM} (Volts)	I_O, AVERAGE RECTIFIED FORWARD CURRENT (Amperes)[1]				
	50	60	70	100	200
	257-01 (DO-203AB) Style 2	340E-01 (TO-218) Style 1	257-01 (DO-203AB) Style 2	357C-02 POWERTAP Cathode = Mounting Plate Anode = Terminal 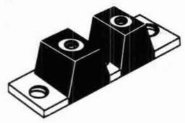	
50	MUR5005		MUR7005		
100	MUR5010		MUR7010		
150	MUR5015		MUR7015		
200	***MUR5020***	***MUR6020***	***MUR7020***	***MUR10020CT***	***MUR20020CT***
300		MUR6030			
400		***MUR6040***			MUR20040CT
500					
600					
700					
800					
900					
1000					
I_{FSM} (Amperes)	600	600	1000	400	800
t_{rr} nec	50	100	50	50	50
T_J (Max) °C	175	175	175	175	175

(1) I_O is total device output current.

Devices listed in bold, italic are Motorola preferred devices.

Fast Recovery Rectifiers

Fast Recovery Rectifiers are available for designs that require a power rectifier with maximum switching times ranging from 200 ns to 750 ns. These devices are offered in current ranges of 1 to 30 amperes and in voltages to 600 volts.

All devices are connected cathode-to-case or cathode-to-heatsink, where applicable. Reverse polarity may be available on some devices upon special request. Contact your Motorola representative for more information.

Table 6 — Fast Recovery Rectifiers

	I_O, AVERAGE RECTIFIED FORWARD CURRENT (Amperes)[1]				
	1	3		5	6
V_{RRM} (Volts)	59-04 Plastic Cathode = Polarity Band	60-01 Metal Style 1	267-03 Plastic Cathode = Polarity Band	194-04 Plastic Style 1	245A-02 (DO-203AA) Metal Style 2
50	1N4933[3]	MR830	MR850	MR820	1N3879
100	1N4934[3]	MR831	MR851	MR821	1N3880
200	***1N4935***[3]	***MR832***	***MR852***	***MR822***	***1N3881***
400	1N4936[3]	MR834	MR854	MR824	1N3883
600	***1N4937***[3]	***MR836***	***MR856***	***MR826***	***MR1366***
I_{FSM} (Amps)	30	100	100	300	150
T_A @ Rated I_O (°C)	75		90[8]	55[8]	
T_C @ Rated I_O (°C)		100			100
T_J (Max) °C	150	150	175	175	150
t_{rr} (µs)	0.2	0.2	0.2	0.2	0.2

(1) I_O is total device output.
(3) Package Size: 0.120″ max diameter by 0.260″ max length.
(8) Must be derated for reverse power dissipation. See data sheet.

Devices listed in bold, italic are Motorola preferred devices.

FAST RECOVERY RECTIFIERS (continued)

Table 6 — Fast Recovery Rectifiers (continued)

	I_O, AVERAGE RECTIFIED FORWARD CURRENT (Amperes)[1]			
	12	**20**	**24**	**30**
V_{RRM} (Volts)	245A-02 (DO-203AA) Metal Style 2	42A-01 (DO-203AB) Metal Style 2	339-02 Plastic[4] Style 1	42A-01 (DO-203AB) Metal Style 2
50	1N3889	1N3899	MR2400F	1N3909
100	1N3890	1N3900	MR2401F	1N3910
200	***1N3891***	***1N3901***	***MR2402F***	***1N3911***
400	1N3893	1N3903	MR2404F	1N3913
600	***MR1376***	***MR1386***	***MR2406F***	***MR1396***
I_{FSM} (Amps)	200	250	300	300
T_A @ Rated I_O (°C)				
T_C @ Rated I_O (°C)	100	100	125	100
T_J (Max) °C	150	150	175	150
t_{rr} (µs)	0.2	0.2	0.2	0.2

(1) I_O is total device output.
(4) Meets mounting configuration of TO-220 outline.

Devices listed in bold, italic are Motorola preferred devices.

General-Purpose Rectifiers

Motorola offers a wide variety of low-cost devices, packaged to meet diverse mounting requirements. Avalanche capability is available in the axial lead 1.5, 3.0 and 6.0 amp packages, shown below, to provide protection from transients.

All devices are connected cathode-to-case or cathode-to-heatsink, where applicable. Reverse polarity may be available on some devices upon special request. Contact your Motorola representative for more information.

Table 7 — General-Purpose Rectifiers

	I_O, AVERAGE RECTIFIED FORWARD CURRENT (Amperes)(1)						
	1	3		6	12	20	24
V_{RRM} (Volts)	59-03 (DO-41) Plastic Cathode = Polarity Band	60-01 Metal Style 1	267-03 Plastic Cathode = Polarity Band	194-04 Plastic Style 1	245A-02 (DO-203AA) Metal Style 2		339-02 Plastic(4) Style 1 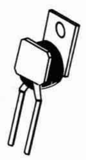
50	1N4001(3)	1N4719	1N5400	MR750	MR1120 1N1199,A,B	MR2000	MR2400
100	1N4002(3)	1N4720	1N5401	MR751	MR1121 1N1200,A,B	MR2001	MR2401
200	1N4003(3)	1N4721	1N5402	MR752	MR1122 1N1202,A,B	MR2002	MR2402
400	***1N4004***(3)	***1N4722***	***1N5404***	***MR754***	***MR1124*** ***1N1204,A,B***	***MR2004***	***MR2404***
600	1N4005(3)	1N4723	***1N5406***	MR756	MR1126 1N1206,A,B	MR2006	***MR2406***
800	1N4006(3)	1N4724		MR758	MR1128	MR2008	
1000	***1N4007***(3)	***1N4725***		***MR760***	***MR1130***	***MR2010***	
I_{FSM} (Amps)	30	300	200	400	300(9)	400	400
T_A @ Rated I_O (°C)	75	75	T_L = 105	60			
T_C @ Rated I_O (°C)					150	150	125
T_J (Max) °C	175	175	175	175	190	175	175

(1) I_O is total device output.
(3) Package Size: 0.120″ max diameter by 0.260″ max length.
(4) Meets mounting configurations of TO-220 outline.
(9) IFSM is for MR1120 series, 1N1199 = 100, -A = 240, -B = 250.

Devices listed in bold, italic are Motorola preferred devices.

Table 7 — General-Purpose Rectifiers (continued)

V_{RRM} (Volts)	I_O, AVERAGE RECTIFIED FORWARD CURRENT (Amperes)[1]						
	25	30				40	50
	193-04 Plastic[10] Cathode = Polarity Band	1-07 (TO-204AA) Metal Styles 8 and 9 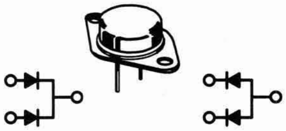		43-07 (DO-21) Metal Style 2		42A-01 (DO-203AB) Metal Style 2	43-04 Metal Style 2
50	MR2500			1N3491	1N3659	1N1183A	MR5005
100	MR2501	***MR4422CT***	***MR4422CTR***	1N3492	1N3660	1N1184A	MR5010
200	MR2502			1N3493	1N3661	1N1186A	MR5020
400	***MR2504***			***1N3495***	***1N3663***	1N1188A	***MR5040***
600	MR2506					***1N1190A***	
800	MR2508						
1000	***MR2510***						
I_{FSM} (Amps)	400	400	400	300	400	800	600
T_A @ Rated I_O (°C)							
T_C @ Rated I_O (°C)	150			130	100	150	150
T_J (Max) °C	175	150	150	175	175	190	195

(1) I_O is total device output.
(10) Request data sheet for mounting information.

Devices listed in bold, italic are Motorola preferred devices.

Thyristors and Triggers

In Brief . . .

Motorola's broad line of Thyristors include. . . .

- A full line of TRIACs and SCRs covering a forward current range from 0.5 to 55 amperes and blocking voltages from 15 to 800 volts. The TRIAC line also includes optically-coupled TRIAC drivers from Motorola's Optoelectronic product line.
- Two basic package categories — plastic for lowest cost which includes the fully insulated plastic Case 221C-02 (TO-220 Isolated) and metal for hermetically-sealed requirements in high-reliability projects.
- An extensive line of trigger devices that includes SIDACs, PUTs and SBS.

Then there are the special applications devices for Ignition circuits and Crowbar applications. Also included are isolated packaged devices for appliances and surface mount packages for surface mounting in space-saving requirements.

Finally there is the continued Motorola investment in discrete-product R & D producing new capabilities such as transient SIDACs for use in circuits sensitive to high voltage transients.

Page

Isolated TRIAC Mold Type 5.5-2

SCRs 5.5-2

General Purpose 5.5-2

TRIACs 5.5-11

General Purpose 5.5-11

Optically Isolated Driver/Triac Combinations 5.5-24

Triggers 5.5-25

SIDACs 5.5-25

PUT-Programmable Unijunctions 5.5-25

SBS-Silicon Bidirectional Switch 5.5-25

SCRs

Silicon Controlled Rectifiers

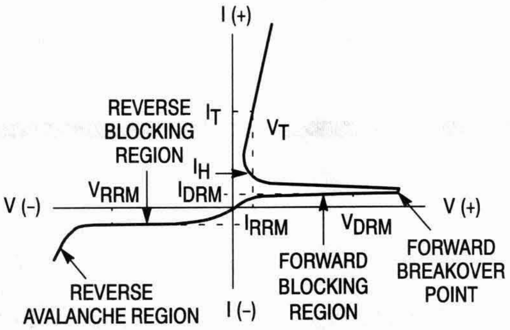

Isolated TRIAC Mold Type

ATTENTION: PACKAGE INNOVATION

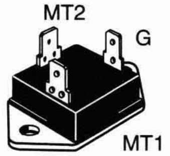

CASE 383-01

Features a TO-3 isolated mounting with a high isolation voltage of 2.5 kVrms min. This package also offers quick disconnect lead attachments, is plastic encapsulated to provide economical cost and is UL recognized. See pages 2-22 and 2-23 for the MAC625 and MAC635 series.

(3) Exponential decay 2 µs wide at 5 time constants, f = 12 Hz.
(4) European Part Numbers. Package is Case 29 with Leadform 18. Case style is 3.

Table 1 — SCRs

Metal/Plastic Packages

0.8 to 55 Amperes RMS, 25 to 800 Volts

On-State (RMS) Current		
0.8 AMP	1.5 AMPS	
T_C = 58°C	T_C = 50°C	
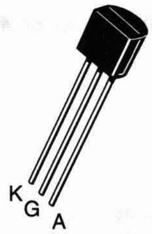		
Sensitive Gate		
Case 29-04 TO-226AA (TO-92) Style 10		V_{DRM} V_{RRM} (Volts)
MCR102 2N5060 BRX44/BRY55-30(4)		25
MCR103 2N5061 BRX45/BRY55-609(4)	***MCR22-2***	50
MCR100-3 ***2N5062*** BRX46/BRY55-100(4)	***MCR22-3***	100
MCR100-4 ***2N5064*** BRX47/BRY55-200(4)	***MCR22-4***	200
MCR100-6 BRX49/BRY55-400(4)	***MCR22-6***	400
BRY55-500(4)		500
MCR100-8 BRY55-600(4)	***MCR22-8***	600
Maximum Electrical Characteristics		
10	15 150(3)	I_{TSM} (Amps) 60 Hz
0.2		I_{GT} (mA)
0.8		V_{GT} (V)
−65 to +110	−40 to +125	T_J Operating Range (°C)

Devices listed in bold, italic are Motorola preferred devices.

Table 1 — SCRs (continued)

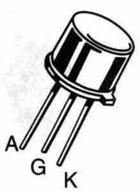

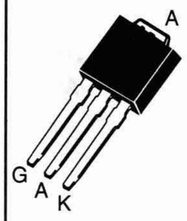

V_{DRM} V_{RRM} (Volts)	On-State (RMS) Current					
	1.6 AMPS			4 AMPS		
	T_C = 80°C		T_C = 65°C	T_C = 93°C	T_C = 30°C	
			Sensitive Gate			
	Case 79-04 TO-205AD (TO-39) Style 3			Case 77-07 TO-126 Style 2		Case 369 Style 5
50	2N1595	2N2323		***MCR106-2*** ***2N6237***	***C106F***	
100	2N1596	2N2324		***MCR106-3*** ***2N6238***	***C106A***	***MCR703A1***
200	2N1597	2N2326	MCR1906-4	***MCR106-4*** ***2N6239***	***C106B***	***MCR704A1***
400	2N1599	2N2329	MCR1906-6	***MCR106-6*** ***2N6240***	***C106D***	***MCR706A1***
600			MCR1906-8	***MCR106-8*** ***2N6241***	***C106M***	***MCR708A1***
800						
Maximum Electrical Characteristics						
I_{TSM} (Amps) 60 Hz	15			25	20	25
I_{GT} (mA)	10	0.2	1	0.2		0.075
V_{GT} (V)	3	0.8	1		0.8	1
T_J Operating Range (°C)	−65 to +125		−65 to +110	−40 to +110		

Devices listed in bold, italic are Motorola preferred devices.

On-State (RMS) Current					
4 AMPS	6 AMPS	8 AMPS			
T_C = 30°C		T_C = 70°C	T_C = 75°C		
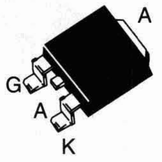	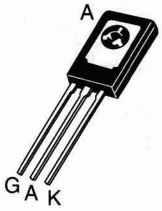	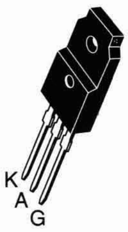	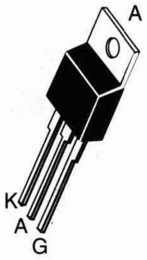		
Surface Mount	**Sensitive Gate**	**Isolated** (UL)			
Case 369A **Style 5**	**Case 77-07** **TO-126** **Style 2**	**Case 221C-02** **Style 2**	**Case 221A-04** **TO-220AB** **Style 3**		**V_{DRM}** **V_{RRM}** **(Volts)**
	MCR506-2	***MCR218-2FP***	***MCR218-2***	***C122F1***	**50**
MCR703A(5)	***MCR506-3***		***MCR218-3***	***C122A1***	**100**
MCR704A(5)	***MCR506-4***	***MCR218-4FP***	***MCR218-4***	***C122B1***	**200**
MCR706A(5)	***MCR506-6***	***MCR218-6FP***	***MCR218-6***	***C122D1***	**400**
MCR708A(5)	***MCR506-8***	***MCR218-8FP***	***MCR218-8***	***C122M1***	**600**
		MCR218-10FP	***MCR218-10***	***C122N1***	**800**
Maximum Electrical Characteristics					
25	40	80		90	**I_{TSM} (Amps)** **60 Hz**
0.075	0.2	25		25	**I_{GT} (mA)**
1		1.5			**V_{GT} (V)**
−40 to +110		−40 to +125		−40 to +100	**T_J Operating** **Range (°C)**

(5) Available in tape and reel — add RL suffix to part number.

UL Indicates UL Recognized — File #E69369

Devices listed in bold, italic are Motorola preferred devices.

Table 1 — SCRs (continued)

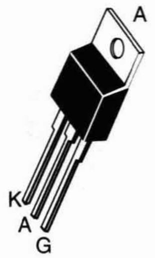

V_{DRM} V_{RRM} (Volts)	On-State (RMS) Current				
	8 AMPS	10 AMPS		12 AMPS	
	T_C = 83°C	T_C = 75°C		T_C = 85°C	T_C = 90°C
	Sensitive Gate				
	Case 221A-04 TO-220AB Style 3				
50	***MCR72-2***	***MCR310-2***	S2800F	MCR68-2	***2N6394***
100	***MCR72-3***	***MCR310-3***	S2800A	MCR68-3	***2N6395***
200	***MCR72-4***	***MCR310-4***	S2800B		***2N6396***
400	***MCR72-6***	***MCR310-6***	S2800D	MCR68-6	***2N6397***
600	***MCR72-8***	***MCR310-8***	S2800M		***2N6398***
800	***MCR72-10***	***MCR310-10***	S2800N		***2N6399***
Maximum Electrical Characteristics					
I_{TSM} (Amps) 60 Hz	100			300(2)	100
I_{GT} (mA)	0.2		15	30	
V_{GT} (V)	1.5				
T_J Operating Range (°C)	−40 to +110		−40 to +100	−40 to +125	

(2) Peak capacitor discharge current for t_w = 1 ms. t_w is defined as five time constants of an exponentially decaying current pulse (crowbar applications).

Devices listed in bold, italic are Motorola preferred devices.

On-State (RMS) Current					
16 AMPS	20 AMPS				
T_C = 90°C	T_C = 65°C			T_C = 67°C	
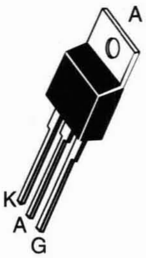			Isolated		
Case 221A-04 TO-220AB Style 3	**Case 174-04 Style 1**	**Case 263-04 Style 1**	**Case 311-02 Style 1**	**Case 263-04 Style 1**	**V_{DRM} V_{RRM} (Volts)**
2N6400		2N5168		MCR3918-2A	**50**
2N6401	MCR6200A	S6210A	***2N6167*** S6220A	MCR3918-3A	**100**
2N6402	MCR6200B	S6210B	***2N6168*** S6220B	MCR3918-4A	**200**
2N6403	MCR6200D	S6210D	***2N6169*** S6220D	MCR3918-6A	**400**
2N6404	MCR6200M	S6210M	***2N6170*** S6220M	MCR3918-8A	**600**
2N6405				MCR3918-10A	**800**
Maximum Electrical Characteristics					
160	MCR6200/S6210/S6220/2N 200/200/200/240			240	**I_{TSM} (Amps) 60 Hz**
30	MCR6200/S6210/S6220/2N 15/15/15/40			40	**I_{GT} (mA)**
1.5	MCR6200/S6210/S6220/2N . . . . 2/2/2/1.5 or 1.6			1.5	**V_{GT} (V)**
−40 to +125	−40 to +100		−40 to +100	−40 to +125	**T_J Operating Range (°C)**

Devices listed in bold, italic are Motorola preferred devices.

Table 1 — SCRs (continued)

	On-State (RMS) Current				
	25 AMPS				
	T_C = 85°C			T_C = 65°C	T_C = 60°C
	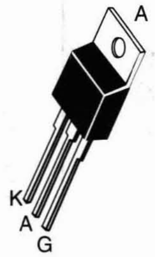		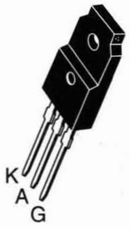 Isolated UL	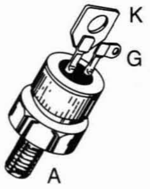	
V_{DRM} V_{RRM} (Volts)	Case 221A-04 TO-220AB Style 3		Case 221C-02 Style 2	Case 263-04 Style 1	
50	***2N6504***	MCR69-2	***MCR225-2FP***	2N682	MCR230F
100	***2N6505***	MCR69-3		2N683	MCR230A
200	***2N6506***		***MCR225-4FP***	2N685	MCR230B
400	***2N6507***	MCR69-6	***MCR225-6FP***	2N688	MCR230D
600	***2N6508***		***MCR225-8FP***	2N690	MCR230M
800	***2N6509***		***MCR225-10FP***	2N692	
Maximum Electrical Characteristics					
I_{TSM} (Amps) 60 Hz	300	750(2)	300	150	250
I_{GT} (mA)	40	30	40		25
V_{GT} (V)	1.5			2	
T_J Operating Range (°C)	−40 to +125			−65 to +125	−40 to +125

(2) Peak capacitor discharge current for t_w = 1 ms. t_w is defined as five time constants of an exponentially decaying current pulse (crowbar applications).

UL Indicates UL Recognized — File #E69369

Devices listed in bold, italic are Motorola preferred devices.

On-State (RMS) Current					
25 AMPS				35 AMPS	
T_C = 60°C	T_C = 65°C		T_C = 70°C	T_C = 65°C	
	Isolated				
Case 263-04 Style 1	**Case 311-02 Style 1**		**Case 174-04 Style 1**	**Case 263-04 Style 1**	V_{DRM} V_{RRM} (Volts)
MCR231F	MCR230F3	MCR231F3			50
MCR231A	MCR230A3	MCR231A3	2N3870		100
MCR231B	MCR230B3	MCR231B3	2N3871	MCR3935-4A	200
MCR231D	MCR230D3	MCR231D3	2N3872	MCR3935-6A	400
MCR231M	MCR230M3	MCR231M3	2N3873	MCR3935-8A	600
			MCR3835-10	MCR3935-10A	800
Maximum Electrical Characteristics					
250			350		I_{TSM} (Amps) 60 Hz
9	25	9	40		I_{GT} (mA)
2	1.5		MCR3835/MCR3935/2N 1.5/1.5/1.6		V_{GT} (V)
−40 to +125					T_J Operating Range (°C)

Table 1 — SCRs (continued)

	On-State (RMS) Current				
	35 AMPS				40 AMPS
	$T_C = 65°C$				$T_C = 80°C$
	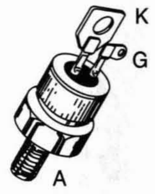		Isolated		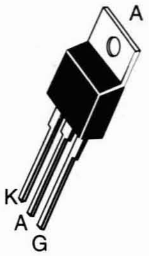
V_{DRM} V_{RRM} (Volts)	**Case 263-04**	**Case 174-04 Style 1**	**Case 311-02 Style 1**		**Case 221A-04 TO-220AB Style 3**
50	MCR70-2A				
100	MCR70-3A	MCR229A	2N6171	C228A3	
200		MCR229B	2N6172	C228B3	***MCR264-4***
400	MCR70-6A	MCR229D	2N6173	C228D3	***MCR264-6***
600		MCR229M	2N6174	C228M3	***MCR264-8***
800					***MCR264-10***
Maximum Electrical Characteristics					
I_{TSM} **(Amps) 60 Hz**	350 850(2)	300	350	300	400
I_{GT} **(mA)**	30	40			50
V_{GT} **(V)**	1.5	2.5	1.6	2.5	1.5
T_J **Operating Range (°C)**	−40 to +125				

(2) Peak capacitor discharge current for $t_w = 1$ ms. t_w is defined as five time constants of an exponentially decaying current pulse (crowbar applications).

Devices listed in bold, italic are Motorola preferred devices.

On-State (RMS) Current					
55 AMPS					
T_C = 75°C		T_C = 70°C		T_C = 85°C	
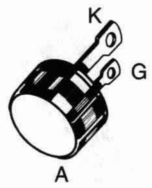	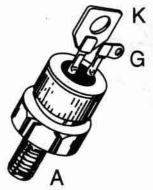	 **Isolated**	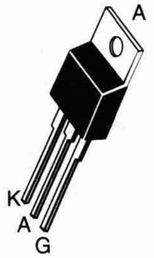		
Case 174-04 Style 1	**Case 263-04 Style 1**	**Case 311-02 Style 1**	**Case 221A-04 TO-220AB Style 3**	**Case 263-04 Style 1**	**V_{DRM} V_{RRM} (Volts)**
MCR63-2A	MCR64-2		***MCR265-2***	MCR71-2	**50**
MCR63-3A	MCR64-3	MCR65-3		MCR71-3	**100**
MCR63-4A	MCR64-4	MCR65-4	***MCR265-4***		**200**
MCR63-6A	MCR64-6	MCR65-6	***MCR265-6***	MCR71-6	**400**
MCR63-8A	MCR64-8	MCR65-8	***MCR265-8***		**600**
MCR63-10A	MCR64-10	MCR65-10	***MCR265-10***		**800**
Maximum Electrical Characteristics					
550				550 1700(2)	**I_{TSM} (Amps) 60 Hz**
40			50	30	**I_{GT} (mA)**
3			1.5		**V_{GT} (V)**
−40 to +125					**T_J Operating Range (°C)**

(2) Peak capacitor discharge current for t_w = 1 ms. t_w is defined as five time constants of an exponentially decaying current pulse (crowbar applications).

Devices listed in bold, italic are Motorola preferred devices.

Table 2 — TRIACs

Metal/Plastic Packages

0.6 to 40 Amperes, 25 to 800 Volts

V_{DRM} (Volts)	On-State (RMS) Current					
	0.6 AMP			0.8 AMP		2.5 AMPS
	T_C = 50°C			T_C = 60°C		T_C = 70°C
	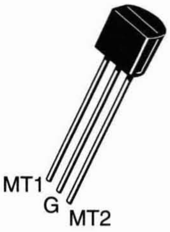					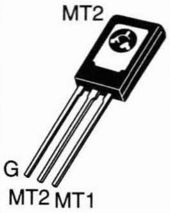
	Sensitive Gate					
	Case 29-04 TO-226AA (TO-92) Style 12					Case 77-07 Style 5
200	***MAC97-4***	***MAC97A4***	MAC97B4	LMAC94A2	LMAC94B2	***T2322B***
400	***MAC97-6***	***MAC97A6***	MAC97B6	LMAC94A3	LMAC94B3	***T2322D***
600	***MAC97-8***	***MAC97A8***	MAC97B8	LMAC94A4	LMAC94B4	***T2322M***
800						
Maximum Electrical Characteristics						
I_{TSM} (Amps)	8					25
I_{GT} @ 25°C (mA) MT2(+)G(+) MT2(+)G(−) MT2(−)G(−) MT2(−)G(+)	10 10 10 10	5 5 5 7	3 3 3 5	10 10 10 10	25 25 25 25	10 10 10 10
V_{GT} @ 25°C (V) MT2(+)G(+) MT2(+)G(−) MT2(−)G(−) MT2(−)G(+)	2 2 2 2.5					2.2 2.2 2.2 2.2
T_J Operating Range (°C)	−40 to +110					

Devices listed in bold, italic are Motorola preferred devices.

On-State (RMS) Current					
2.5 AMPS	**4 AMPS**			**6 AMPS**	
T_C = 70°C	**T_C = 85°C**			**T_C = 80°C**	
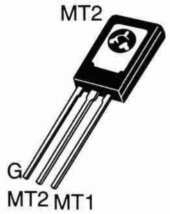				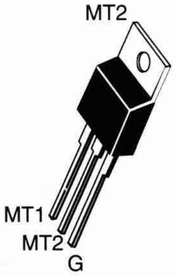	
Sensitive Gate					
Case 77-07 Style 5				**Case 221A-04 TO-220AB Style 4**	**V_{DRM} (Volts)**
T2323B	***2N6071***	***2N6071A***	***2N6071B***	T2500B	**200**
T2323D	***2N6073***	***2N6073A***	***2N6073B***	T2500D	**400**
T2323M	***2N6075***	***2N6075A***	***2N6075B***	T2500M	**600**
				T2500N	**800**
Maximum Electrical Characteristics					
25	30			60	**I_{TSM} (Amps)**
25 40 25 40	30 — 30 —	5 5 5 10	3 3 3 5	25 60 25 60	**I_{GT} @ 25°C (mA) MT2(+)G(+) MT2(+)G(−) MT2(−)G(−) MT2(−)G(+)**
2.2 2.2 2.2 2.2	@ −40°C 2.5 — 2.5 —	@ −40°C 2.5 2.5 2.5 2.5		2.5 2.5 2.5 2.5	**V_{GT} @ 25°C (V) MT2(+)G(+) MT2(+)G(−) MT2(−)G(−) MT2(−)G(+)**
−40 to +110		−40 to +100			**T_J Operating Range (°C)**

Devices listed in bold, italic are Motorola preferred devices.

Table 2 — TRIACs (continued)

V_{DRM} (Volts)	On-State (RMS) Current				
	6 AMPS		8 AMPS		
	$T_C = 80°C$				
	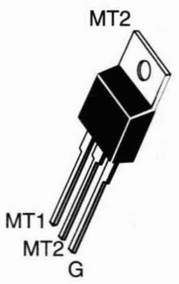	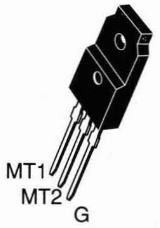 Isolated ®️	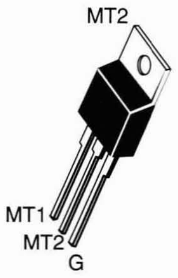		
	Case 221A-04 TO-220AB Style 4	**Case 221C-02 Style 3**	**Case 221A-06 TO-220AB Style 4**		
200	T2801B	***T2500BFP***	SC141B	SC143B	***MAC218-4 MAC218A4***
400	T2801D	***T2500DFP***	SC141D	SC143D	***MAC218-6 MAC218A6***
600	T2801M	***T2500MFP***	SC141M	SC143M	***MAC218-8 MAC218A8***
800		***T2500NFP***	SC141N		***MAC218-10 MAC218A10***
Maximum Electrical Characteristics					
I_{TSM} (Amps)	80	100	80	100	
I_{GT} @ 25°C (mA) MT2(+)G(+) MT2(+)G(−) MT2(−)G(−) MT2(−)G(+)	80 — 80 —	25 60 25 60	50 50 50 —		50 50 50 75(1)
V_{GT} @ 25°C (V) MT2(+)G(+) MT2(+)G(−) MT2(−)G(−) MT2(−)G(+)	2.5 2.5 2.5 2.5		2.5 2.5 2.5 —		2 2 2 2.5(1)
T_J Operating Range (°C)	−40 to +100		−40 to +110		−40 to +125

(1) Applied to A-version only. Non A-version is unspecified.

®️ Indicates UL Recognized — File #E69369

Devices listed in bold, italic are Motorola preferred devices.

On-State (RMS) Current							
8 AMPS							
$T_C = 80°C$							
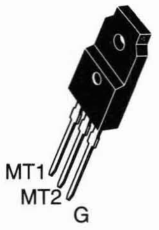 	 						
Isolated UL	**High Noise Immunity**						
Case 221C-02 Style 3	**Case 221A-04 TO-220AB Style 4**						**V_{DRM} (Volts)**
MAC218-4FP ***MAC218A4FP***	***MAC219-4***			***2N6342*** ***2N6346***	T2800B	T2802B	**200**
MAC218-6FP ***MAC218A6FP***	***MAC219-6***			***2N6343*** ***2N6347***	T2800D	T2802D	**400**
		MAC137-500	***MAC137G-500***				**500**
MAC218-8FP ***MAC218A8FP***	***MAC219-8***	***MAC137-600***	***MAC137G-600***	***2N6344*** ***2N6348***	T2800M	T2802M	**600**
MAC218-10FP ***MAC218A10FP***	***MAC219-10***	***MAC137-800***	***MAC137G-800***	***2N6345*** ***2N6349***			**800**
Maximum Electrical Characteristics							
100		60		100			**I_{TSM} (Amps)**
50 50 50 75(1)	100 100 100 —	35 35 35 70	50 50 50 100	50 75(6) 50 75(6)	25 60 25 60	50 — 50 —	**I_{GT} @ 25°C (mA)** **MT2(+)G(+)** **MT2(+)G(−)** **MT2(−)G(−)** **MT2(−)G(+)**
2 2 2 2.5(1)	2 2 2 —	1.5 1.5 1.5 1.5		2 2.5(6) 2.5 2.5(6)	2.5 2.5 2.5 2.5	2.5 — 2.5 —	**V_{GT} @ 25°C (V)** **MT2(+)G(+)** **MT2(+)G(−)** **MT2(−)G(−)** **MT2(−)G(+)**
−40 to +125					−40 to +100		**T_J Operating Range (°C)**

(1) Applied to A-version only. Non A-version is unspecified.
(6) Denotes 2N6346-49 Series only.

UL Indicates UL Recognized — File #E69369

Devices listed in bold, italic are Motorola preferred devices.

Table 2 — TRIACs (continued)

	On-State (RMS) Current				
	8 AMPS				10 AMPS
	$T_C = 80°C$				$T_C = 70°C$
	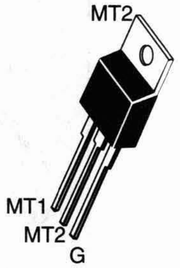		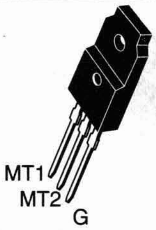 Isolated ®(UL)		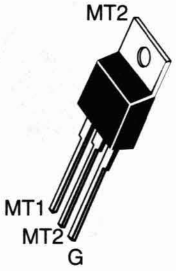
	Sensitive Gate				
V_{DRM} (Volts)	Case 221A-04 TO-220AB Style 4		Case 221C-02 Style 3		Case 221A-04 TO-220AB Style 4
200	***MAC228-4*** ***MAC228A4***	***MAC229-4*** ***MAC229A4***	***MAC228-4FP*** ***MAC228A4FP***	***MAC229-4FP*** ***MAC229A4FP***	***MAC210-4*** ***MAC210A4***
400	***MAC228-6*** ***MAC228A6***	***MAC229-6*** ***MAC229A6***	***MAC228-6FP*** ***MAC228A6FP***	***MAC229-6FP*** ***MAC229A6FP***	***MAC210-6*** ***MAC210A6***
600	***MAC228-8*** ***MAC228A8***	***MAC229-8*** ***MAC229A8***	***MAC228-8FP*** ***MAC228A8FP***	***MAC229-8FP*** ***MAC229A8FP***	***MAC210-8*** ***MAC210A8***
800	***MAC228-10*** ***MAC228A10***	***MAC229-10*** ***MAC229A10***	***MAC228-10FP*** ***MAC228A10FP***	***MAC229-10FP*** ***MAC229A10FP***	***MAC210-10*** ***MAC210A10***
Maximum Electrical Characteristics					
I_{TSM} (Amps)	80				100
I_{GT} @ 25°C (mA) MT2(+)G(+) MT2(+)G(−) MT2(−)G(−) MT2(−)G(+)	5 5 5 10(1)	10 10 10 20(1)	5 5 5 10(1)	10 10 10 20(1)	50 50 50 75(1)
V_{GT} @ 25°C (V) MT2(+)G(+) MT2(+)G(−) MT2(−)G(−) MT2(−)G(+)	2 2 2 2.5(1)				
T_J Operating Range (°C)	−40 to +110				−40 to +125

(1) Applied to A-version only. Non A-version is unspecified.

®(UL) Indicates UL Recognized — File #E69369

Devices listed in bold, italic are Motorola preferred devices.

On-State (RMS) Current					
10 AMPS					
T_C = 80°C	T_C = 70°C	T_C = 85°C	T_C = 78°C	T_C = 85°C	
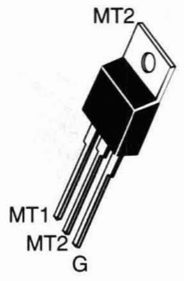	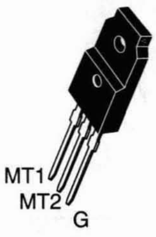	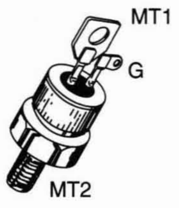			
	Isolated ЯU			Isolated	
Case 221A-04 **TO-220AB** **Style 4**	**Case 221C-02** **Style 3**	**Case 263-04** **Style 2**		**Case 311-02** **Style 2**	**V_{DRM} (Volts)**
SC146B	***MAC210-4FP*** ***MAC210A4FP***	MAC5569	MAC245B	MAC4121B	**200**
SC146D	***MAC210-6FP*** ***MAC210A6FP***	MAC5570	MAC245D	MAC4121D	**400**
SC146M	***MAC210-8FP*** ***MAC210A8FP***	MAC4111M	MAC245M	MAC4121M	**600**
SC146N	***MAC210-10FP*** ***MAC210A10FP***		MAC245N	MAC4121N	**800**
Maximum Electrical Characteristics					
120	100				**I_{TSM} (Amps)**
50 50 50 —	50 50 50 75(1)	25 40 25 40	50 50 50 —	25 40 25 40	**I_{GT} @ 25°C (mA)** **MT2(+)G(+)** **MT2(+)G(−)** **MT2(−)G(−)** **MT2(−)G(+)**
2.5 2.5 2.5 —	2 2 2 2.5(1)	2.5 2.5 2.5 2.5	2.5 2.5 2.5 —	2.5 2.5 2.5 2.5	**V_{GT} @ 25°C (V)** **MT2(+)G(+)** **MT2(+)G(−)** **MT2(−)G(−)** **MT2(−)G(+)**
−40 to +125		−65 to +125	−40 to +125	−65 to +125	**T_J Operating Range (°C)**

(1) Applied to A-version only. Non A-version is unspecified.

ЯU Indicates UL Recognized — File #E69369

Devices listed in bold, italic are Motorola preferred devices.

Table 2 — TRIACs (continued)

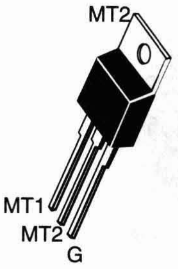

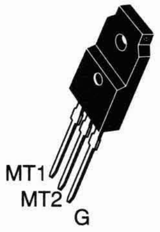

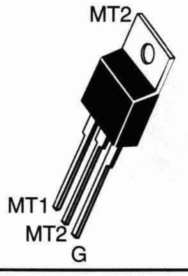

	On-State (RMS) Current				
	12 AMPS				
	T_C = 75°C	T_C = 85°C			T_C = 80°C
	Sensitive Gate	Isolated ℛ𝒰		High Noise Immunity	
V_{DRM} (Volts)	Case 221A-04 TO-220AB Style 4	Case 221C-02 Style 3	Case 221A-04 TO-220AB Style 4		
200	***MAC310-4*** ***MAC310A4***	***MAC212-4FP*** ***MAC212A4FP***	***MAC212-4*** ***MAC212A4***	***MAC213-4***	SC149B
400	***MAC310-6*** ***MAC310A6***	***MAC212-6FP*** ***MAC212A6FP***	***MAC212-6*** ***MAC212A6***	***MAC213-6***	SC149D
600	***MAC310-8*** ***MAC318A8***	***MAC212-8FP*** ***MAC212A8FP***	***MAC212-8*** ***MAC212A8***	***MAC213-8***	SC149M
800	***MAC310-10*** ***MAC310A10***	***MAC212-10FP*** ***MAC212A10FP***	***MAC212-10*** ***MAC212A10***	***MAC213-10***	
Maximum Electrical Characteristics					
I_{TSM} (Amps)	100				120
I_{GT} @ 25°C (mA)					
MT2(+)G(+)	5	50	50	100	50
MT2(+)G(−)	5	50	50	100	50
MT2(−)G(−)	5	50	50	100	50
MT2(−)G(+)	10(1)	75(1)	75(1)	—	—
V_{GT} @ 25°C (V)					
MT2(+)G(+)	2	2		2	2.5
MT2(+)G(−)	2	2		2	2.5
MT2(−)G(−)	2	2		2	2.5
MT2(−)G(+)	2.5(1)	2.5(1)		—	—
T_J Operating Range (°C)	−40 to +125				

(1) Applied to A-version only. Non A-version is unspecified.

ℛ𝒰 Indicates UL Recognized — File #E69369

Devices listed in bold, italic are Motorola preferred devices.

On-State (RMS) Current					
12 AMPS		15 Amps			
T_C = 80°C		T_C = 85°C	T_C = 80°C		
		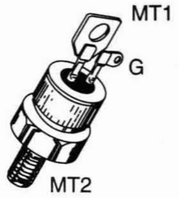			
Case 221A-04 TO-220AB Style 4		**Case 263-04 Style 2**	**Case 174-04 Style 3**		**V_{DRM} (Volts)**
2N6342A	2N6346A	MAC250B	2N5571	SC251B	**200**
2N6343A	2N6347A	MAC250D	2N5572	SC251D	**400**
2N6344A	2N6348A	MAC250M	T4100M	SC251M	**600**
2N6345A	2N6349	MAC250N			**800**
Maximum Electrical Characteristics					
120		100			**I_{TSM} (Amps)**
50 — 50 —	50 75 50 75	50 50 50 —	50 80 50 80		**I_{GT} @ 25°C (mA) MT2(+)G(+) MT2(+)G(–) MT2(–)G(–) MT2(–)G(+)**
2 — 2 —	2 2.5 2 2.5	2.5 2.5 2.5 —	2.5 2.5 2.5 2.5		**V_{GT} @ 25°C (V) MT2(+)G(+) MT2(+)G(–) MT2(–)G(–) MT2(–)G(+)**
–40 to +125		–40 to +115	–40 to +100		**T_J Operating Range (°C)**

Devices listed in bold, italic are Motorola preferred devices.

Table 2 — TRIACs (continued)

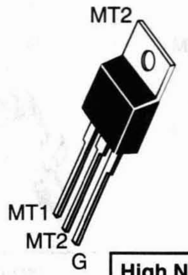

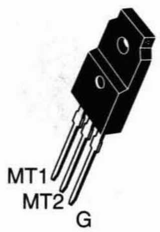

	On-State (RMS) Current				
	15 AMPS				20 AMPS
	T_C = 75°C	T_C = 90°C			T_C = 75°C
	Isolated		High Noise Immunity	Isolated (UL)	
V_{DRM} (Volts)	Case 311-02 Style 2	Case 221A-04 TO-220AB Style 4		Case 221C-02 Style 3	
200	MAC4120B	***MAC15-4*** ***MAC15A4***	***MAC16-4***	***MAC15-4FP*** ***MAC15A4FP***	***MAC320-4FP*** ***MAC320A4FP***
400	MAC4120D	***MAC15-6*** ***MAC15A6***	***MAC16-6***	***MAC15-6FP*** ***MAC15A6FP***	***MAC320-6FP*** ***MAC320A6FP***
600	MAC4120M	***MAC15-8*** ***MAC15A8***	***MAC16-8***	***MAC15-8FP*** ***MAC15A8FP***	***MAC320-8FP*** ***MAC320A8FP***
800	MAC4120N	***MAC15-10*** ***MAC15A10***	***MAC16-10***	***MAC15-10FP*** ***MAC15A10FP***	***MAC320-10FP*** ***MAC320A10FP***

Maximum Electrical Characteristics

I_{TSM} (Amps)	100	150		
I_{GT} @ 25°C (mA)				
MT2(+)G(+)	50	50	100	50
MT2(+)G(–)	80	50	100	50
MT2(–)G(–)	50	50	100	50
MT2(–)G(+)	80	75(1)	—	75(1)
V_{GT} @ 25°C (V)				
MT2(+)G(+)	2.5	2	2	2
MT2(+)G(–)	2.5	2	2	2
MT2(–)G(–)	2.5	2	2	2
MT2(–)G(+)	2.5	2.5(1)	—	2.5(1)
T_J Operating Range (°C)	–40 to +100	–40 to +125		

(1) Applied to A-version only. Non A-version is unspecified.

(UL) Indicates UL Recognized — File #E69369

Devices listed in bold, italic are Motorola preferred devices.

<table>
<tr><th colspan="5">On-State (RMS) Current</th><th rowspan="4">V_{DRM} (Volts)</th></tr>
<tr><th>20 AMPS</th><th colspan="4">25 AMPS</th></tr>
<tr><td colspan="2">T_C = 75°C</td><td>T_C = 80°C</td><td>T_C = 75°C</td><td>T_C = 80°C</td></tr>
<tr><td colspan="2">

High Noise Immunity
Case 221A-04
TO-220AB
Style 4</td><td>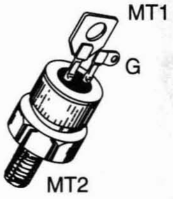

Case 263-04
Style 2</td><td>

Isolated
Case 311-02
Style 2</td><td>

Case 174-04
Style 3</td></tr>
<tr><td>MAC320-4
MAC320A4</td><td>MAC321-4</td><td>SC260B</td><td>SC260B3</td><td>MAC261B</td><td>200</td></tr>
<tr><td>MAC320-6
MAC320A6</td><td>MAC321-6</td><td>SC260D</td><td>SC260D3</td><td>MAC261D</td><td>400</td></tr>
<tr><td>MAC320-8
MAC320A8</td><td>MAC321-8</td><td>SC260M</td><td>SC260M3</td><td>MAC261M</td><td>600</td></tr>
<tr><td>MAC320-10
MAC320A10</td><td>MAC321-10</td><td></td><td></td><td></td><td>800</td></tr>
<tr><th colspan="6">Maximum Electrical Characteristics</th></tr>
<tr><td colspan="2">150</td><td colspan="3">250</td><td>I_{TSM} (Amps)</td></tr>
<tr><td>50
50
50
75(1)</td><td>100
100
100
—</td><td colspan="3">50
50
50
—</td><td>I_{GT} @ 25°C (mA)
MT2(+)G(+)
MT2(+)G(–)
MT2(–)G(–)
MT2(–)G(+)</td></tr>
<tr><td>2
2
2
2.5(1)</td><td>2
2
2
—</td><td colspan="3">2.5
2.5
2.5
—</td><td>V_{GT} @ 25°C (V)
MT2(+)G(+)
MT2(+)G(–)
MT2(–)G(–)
MT2(–)G(+)</td></tr>
<tr><td colspan="2">–40 to
+125</td><td colspan="3">–40 to
+115</td><td>T_J Operating
Range (°C)</td></tr>
</table>

(1) Applied to A-version only. Non A-version is unspecified.

Devices listed in bold, italic are Motorola preferred devices.

Table 2 — TRIACs (continued)

V_{DRM} (Volts)	On-State (RMS) Current				
	25 AMPS			30 AMPS	
	T_C = 80°C		T_C = 85°C		T_C = 60°C
	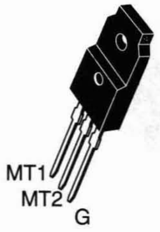	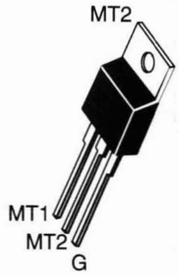	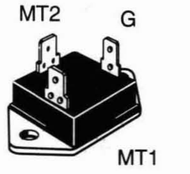	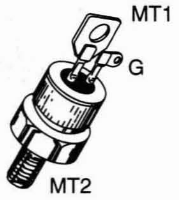	
	Isolated ЯU		Isolated ЯU		
	Case 221C-02 Style 3	Case 221A-04 TO-220AB Style 4	Case 383-01 Style 1	Case 263-04 Style 2	
200	***MAC223-4FP*** ***MAC223A4FP***	***MAC223-4*** ***MAC223A4***	MAC625-4	2N6160	T6411B
400	***MAC223-6FP*** ***MAC223A6FP***	***MAC223-6*** ***MAC223A6***	MAC625-6	2N6161	T6411D
600	***MAC223-8FP*** ***MAC223A8FP***	***MAC223-8*** ***MAC223A8***	MAC625-8	2N6162	T6411M
800	***MAC223-10FP*** ***MAC223A10FP***	***MAC223-10*** ***MAC223A10***			T6411N
Maximum Electrical Characteristics					
I_{TSM} (Amps)	250				300
I_{GT} @ 25°C (mA) MT2(+)G(+) MT2(+)G(–) MT2(–)G(–) MT2(–)G(+)	50 50 50 75(1)		50 50 50 —	60 70 70 100	50 80 50 80
V_{GT} @ 25°C (V) MT2(+)G(+) MT2(+)G(–) MT2(–)G(–) MT2(–)G(+)	2 2 2 2.5(1)		3 3 3 —	2 2.1 2.1 2.5	2.5 2.5 2.5 2.5
T_J Operating Range (°C)	–40 to +125			–65 to +125	–65 to +100

(1) Applied to A-version only. Non A-version is unspecified.

ЯU Indicates UL Recognized — File #E69369

Devices listed in bold, italic are Motorola preferred devices.

On-State (RMS) Current					
30 AMPS		35 AMPS	40 AMPS		
T_C = 85°C	T_C = 55°C	T_C = 58°C	T_C = 65°C	T_C = 70°C	
		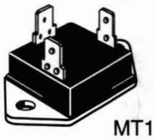			
Isolated		Isolated (UL)			
Case 311-02 Style 2		Case 383-01 Style 1	Case 174-04 Style 3		V_{DRM} (Volts)
2N6163	T6421B	MAC635-4	MAC6401B	MAC5441	200
2N6164	T6421D	MAC635-6	MAC6401D	MAC5442	400
2N6165	T6421M	MAC635-8	MAC6401M	MAC5443	600
	T6421N		MAC6401N		800
Maximum Electrical Characteristics					
250	300	330	300		I_{TSM} (Amps)
60 70 70 100	50 80 50 80	50 50 50 —	50 80 50 80	70 70 70 100	I_{GT} @ 25°C (mA) MT2(+)G(+) MT2(+)G(–) MT2(–)G(–) MT2(–)G(+)
2 2.1 2.1 2.5	2.5 2.5 2.5 2.5	3 3 3 —	2.5 2.5 2.5 2.5	2 2 2 2.5	V_{GT} @ 25°C (V) MT2(+)G(+) MT2(+)G(–) MT2(–)G(–) MT2(–)G(+)
–40 to +100	–65 to +100	–40 to +125	–65 to +125		T_J Operating Range (°C)

(UL) Indicates UL Recognized — File #E69369

Table 2 — TRIACs (continued)

	On-State (RMS) Current			
	40 AMPS			
	T_C = 70°C	T_C = 65°C	T_C = 60°C	T_C = 75°C
			 Isolated	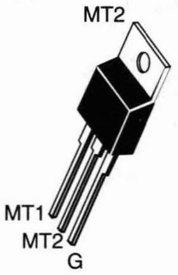
V_{DRM} (Volts)	Case 174-04 Style 3	Case 263-04 Style 2	Case 311-02 Style 2	Case 221A-04 TO-220AB Style 4
200	MAC6400B	2N5444	T6420B	***MAC224-4*** ***MAC224A4***
400	MAC6400D	2N5445	T6420D	***MAC224-6*** ***MAC224A6***
600	MAC6400M	2N5446	T6420M	***MAC224-8*** ***MAC224A8***
800	MAC6400N		T6420N	***MAC224-10*** ***MAC224A10***
Maximum Electrical Characteristics				
I_{TSM} (Amps)	300			350
I_{GT} @ 25°C (mA)				
MT2(+)G(+)	50	70	50	50
MT2(+)G(–)	80	70	80	50
MT2(–)G(–)	50	70	50	50
MT2(–)G(+)	80	100	80	75(1)
V_{GT} @ 25°C (V)				
MT2(+)G(+)	2.5	2	2.5	2
MT2(+)G(–)	2.5	2	2.5	2
MT2(–)G(–)	2.5	2	2.5	2
MT2(–)G(+)	2.5	2.5	2.5	2.5(1)
T_J Operating Range (°C)	–65 to +125	–65 to +110		–40 to +125

(1) Applied to A-version only. Non A-version is unspecified.

Devices listed in bold, italic are Motorola preferred devices.

Table 3 — TRIACs — Optically Isolated

Triac Driver/Triac Combinations

This series of Triac Drivers consists of infrared LEDs optically coupled to photodetectors with Triac output. 7500 V isolation between input and output allows safe, economical triggering of higher power triacs from logic sources with output as low as 3 volts, 10 mA. Associated voltage-compatible triacs provide matched pairs for a variety of voltage/current requirements.

CASE 730A

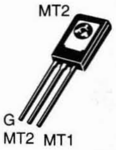

CASE 77-07
TO-126

CASE 221A-04
TO-220

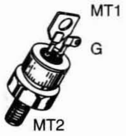

CASE 263-04

CASE 311-02
(ISOLATED)

Triac Drivers

Peak Blocking Voltage Volts	LED Trigger Current I_{FT} mA, Max	Device
250	30 15 10	MOC3009 3010 3011
400	30 15	3020 3021
For Zero Crossover Firing		
250	30 15	MOC3030 (UL) 3031 (UL)
400	30 15	3040 3031
600	30 15	3060 3061

(UL) Indicates UL Recognized — File #E54915

Triacs

Output Current I_{RMS} A, Max	Peak Blocking Voltage Volts			Case
	250	**400**	**600**	
4	MAC3010-4	MAC3020-4	—	77
8	-8	-8	—	221A
15	-15	-15	—	221A
25	-25	-25	—	221A
40	-40	-40	—	263
40	-40I	-40I	—	311
For Zero Crossover Firing				
4	MAC3030-4	MAC3040-4	MAC3060-4	77
8	-8	-8	-8	221A
15	-15	-15	-15	221A
25	-25	-25	-25	221A
40	-40	-40	—	263
40	-40I	-40I	—	311

Thyristor Triggers

Table 4 — SIDACs

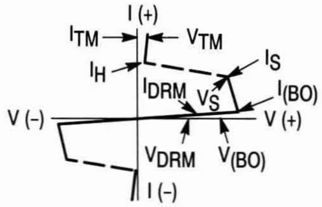

High voltage trigger devices similar in operation to a Triac. Upon reaching the breakover voltage in either direction, the device switches to a low-voltage on-state.

Device Type	I_{TSM} Amps	V_{BO} Volts	
		Min	Max
Case 267-03/1			
MK1V115	20	104	115
MK1V125	20	110	125
MK1V135	20	120	135
MK1V240	20	220	250
MK1V260	20	240	270
MK1V270	20	250	280
Case 59-04/1			
MKP9V120	4	110	125
MKP9V130	4	120	135
MKP9V240	4	220	250
MKP9V260	4	240	270
MKP9V270	4	250	280

Devices listed in bold, italic are Motorola preferred devices.

Table 5 — Programmable Unijunction Transistors — PUT

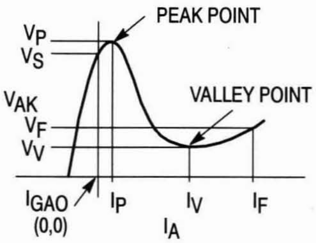

Similar to UJTs, except that I_V, I_P and intrinsic standoff voltage are programmable (adjustable) by means of external voltage divider. This stabilizes circuit performance for variations in device parameters. General operating frequency range is from 0.01 Hz to 10 kHz, making them suitable for long-duration timer circuits.

Device Type	I_P		I_{GAO} @ 40 V nA Max	I_V	
	R_G = 10 kΩ	R_G = 1 MΩ		R_G = 10 kΩ	R_G = 1 MΩ
	µA Max			µA Min	µA Max
Plastic TO-92 (Case 29-04/16)					
2N6027	5	2	10	70	50
2N6028	1	0.15	10	25	25

Table 6 — Silicon Bidirectional Switch (SBS)

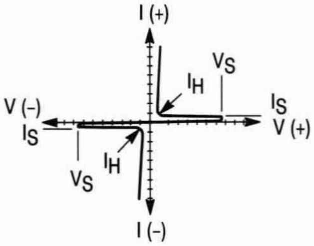

This versatile trigger device exhibits highly symmetrical bidirectional switching characteristics which can be modified by means of a gate lead. Requires a gate trigger current of only 250 µAdc for triggering.

Device Type	V_S Volts		I_S µA Max	I_H mA Max
	Min	Max		
Plastic TO-92/TO-226AA (Case 29-04/12)7z				
MBS4991	6	10	500	1.5
MBS4992	7.5	9	120	0.5
MBS4993	7.5	9	250	0.75

Optoelectronic Devices

In Brief . . .

Motorola's families of optoelectronic components encompass red and infrared GaAs emitters and silicon detectors that are well matched for a variety of applications.

Optoisolators

Infrared emitting diodes optically coupled to silicon detectors with a wide selection of outputs provide at least 7500-volt isolation between input and output. UL recognition and VDE approval and numerous global regulatory approvals attest to their suitability under the most stringent conditions.

Emitters and Detectors

Motorola emitters (LEDs) are manufactured to operate at wavelengths of 660, 850 or 940 nanometers (nm).

The 940 nm emitters are least expensive. They are well suited for applications where close proximity to the detector tolerates a moderate mismatch in spectral response in exchange for lower cost.

The 850 nm emitters have peak emission which almost exactly matches that of silicon detectors. These emitters are widely used where efficiency and high speed are of primary importance.

The 660 nm emitters are visible and well matched to the characteristics of low-cost plastic fiber and find wide use in fiber optics communications.

Coupled with a line of silicon photodetectors with outputs tailored for specific applications (diodes, transistors, Darlingtons, triacs and Schmitt triggers), Motorola's product line offers the engineer a choice of components that can result in optimum system design.

Optointerrupters

Infrared LEDs facing photodetectors in a wide range of slotted packages permit custom design of systems to virtually any physical requirement. A wide selection of outputs (transistor, Darlington, logic, etc.) offers an excellent match for a variety of applications.

Fiber Optics

Low cost components offer 10 MHz bandwidth for short distance communications. High performance emitter detector components provide transmission up to several kilometers with bandwidths in excess of 100 MHz.

Chips

A number of LED and detector functions are available in chip form for hybrid system designs.

Page

Optoisolators 5.6-2
Emitters/Detectors 5.6-10
Optointerrupters 5.6-11
Fiber Optic Components 5.6-12
Emitters 5.6-12
Detectors 5.6-12
Receptacle Mounted Fiber Optic Transmitter and Receiver Components 5.6-14
Optoelectronic Chips 5.6-15

Optoisolators

6-Pin Dual Inline Package

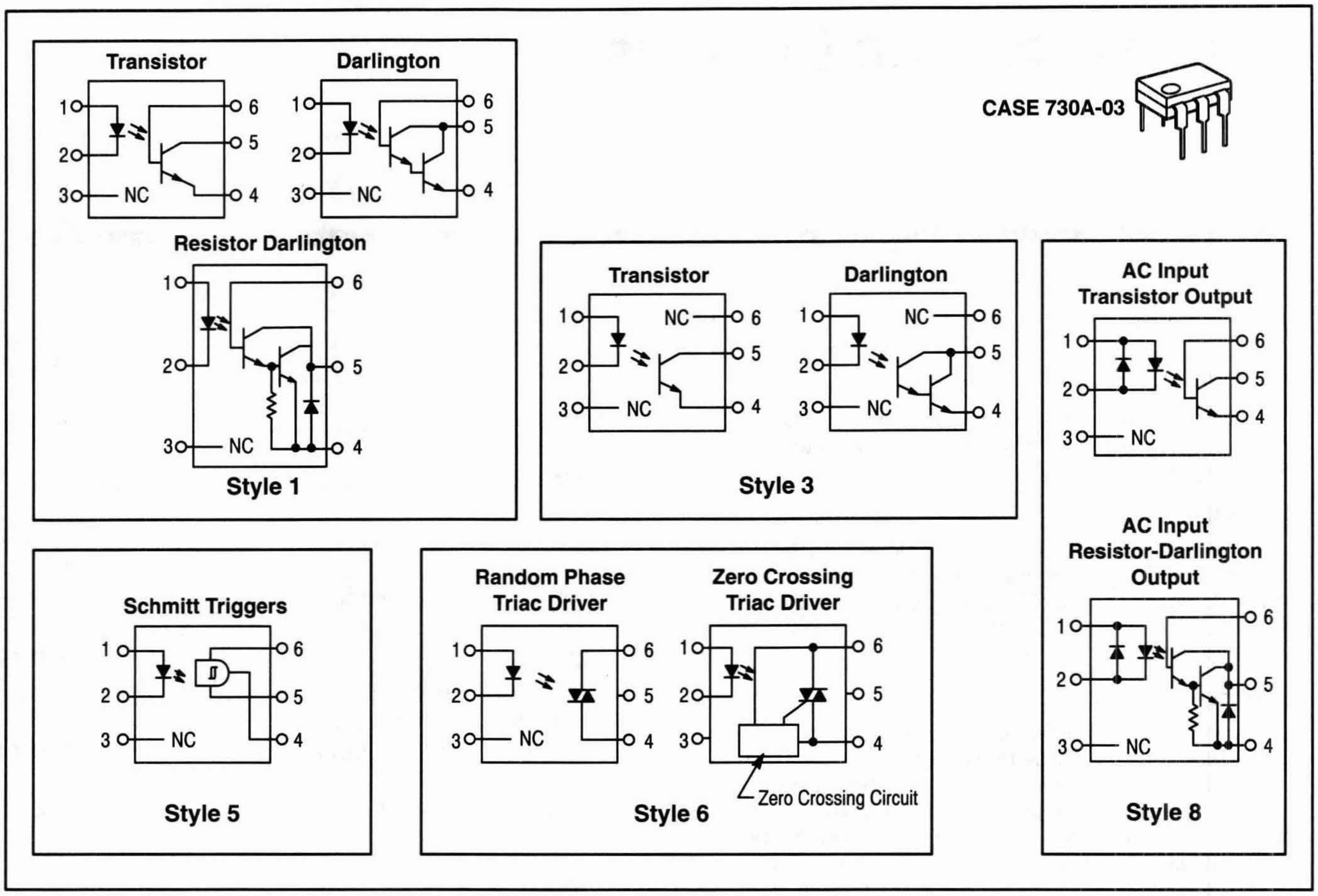

An optoisolator consists of a gallium arsenide infrared emitting diode, IRED, optically coupled to a monolithic silicon photodetector in a wide array of standard devices and encourages the use of special designs and selections for special applications. All Motorola optoisolators have V_{ISO} rating of 7500 Vac(pk), exceeding all other industry standard ratings.

Motorola offers global regulatory approvals, including UL, SETI, SEMKO, DEMKO and CSA. VDE approved per standards 0883/6.80 and 0884/8.87, with additional approvals to DIN IEC950 and IEC380/VDE0806, IEC435/VDE0805, IEC65/VDE0860, VDE110b, also covering all other standards with equal or less stringent requirements, including IEC204/VDE0113, VDE0160, VDE0832, VDE0833.

CASE 730A-03	F or S (F) CASE 730F-02 (S) CASE 730C-03 Surface-mountable gull-wing option	T (T) CASE 730D-03 Wide-spaced (0.400″) lead form option

Optoisolator Lead Form Options

All Motorola 6-pin, dual inline optoisolators are available in either a surface-mountable, gull-wing lead form or a wide-spaced 0.400″ lead form, which is used to satisfy 8 mm pc board spacing requirements.

- Attach “F” to any Motorola 6-pin, dual inline part number for low-profile, surface-mountable, gull-wing lead form.
- Attach “S” to any Motorola 6-pin, dual inline part number for surface-mountable, gull-wing lead form.
- Attach “T” to any Motorola 6-pin, dual inline part number for wide-spaced 0.400″ lead form.

6-Pin Dual Inline Package (continued)

CASE 730A-03 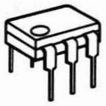

Table 1 — Transistor Output

Pinout: 1-Anode, 2-Cathode, 3-N.C., 4-Emitter, 5-Collector, 6-Base (Style 1)

Device	Current Transfer Ratio (CTR) % Min	@ I_F mA	V_{CE} Volts	$V_{CE(sat)}$ Volts Max	@ I_F mA	I_C mA	t_r/t_f or $t_{on}*/t_{off}*$ Typ µs	@ I_C mA	V_{CC} Volts	R_L Ω	I_F mA	$V_{(BR)CEO}$ Volts Min	V_F Volts Max	@ I_F mA
TIL112	2	10	5	0.5	50	2	2/2	2	10	100		20	1.5	10
TIL111	8	16	0.4	0.4	16	2	5/5	2	10	100		30	1.4	16
4N27	10	10	10	0.5	50	2	1.2/1.3	10	10	100		30	1.5	10
4N28	10	10	10	0.5	50	2	1.2/1.3	10	10	100		30	1.5	10
4N38,A	10	10	10	1	20	4	1.6/2.2	10	10	100		80	1.5	10
H11A4	10	10	10	0.4	10	0.5	1.2/1.3	2	10	100		30	1.5	10
4N25,A	20	10	10	0.5	50	2	1.2/1.3	10	10	100		30	1.5	10
4N26	20	10	10	0.5	50	2	1.2/1.3	10	10	100		30	1.5	10
H11A2	20	10	10	0.4	10	0.5	1.2/1.3	2	10	100		30	1.5	10
H11A3	20	10	10	0.4	10	0.5	1.2/1.3	2	10	100		30	1.5	10
H11A520	20	10	10	0.4	20	2	5*/5*	2	10	100		30	1.5	10
H11AV3	20	10	10	0.4	20	2	5*/4*	2	10	100		70	1.5	10
MCT2	20	10	10	0.4	16	2	1.2/1.3		5	2k	15	30	1.5	20
MCT2E	20	10	10	0.4	16	2	1.2/1.3	2	10	100		30	1.5	20
TIL116	20	10	10	0.4	15	2.2	5/5	2	10	100		30	1.5	60
H11A5	30	10	10	0.4	10	0.5	1.2/1.3	2	10	100		30	1.7	10
CNX35	40–160	10	0.4	0.4	10	2	3/3*	2	5	100		30	1.5	10
CNX36	80–200	10	0.4	0.4	10	4	8/6*	2	5	100		30	1.5	10
CNX83	40	10	0.4	0.4	10	4	3/3*	2	5	100		50	1.5	10
CNY17-1	40–80	10	5	0.4	10	2.5	1.6/2.3		5	75	10	70	1.65	60
MCT271	45–90	10	10	0.4	16	2	4.9*/4.5*	2	5	100		30	1.5	20
MOC8100	50	1	5	0.5	1	0.1	3.8/5.6	2	10	100		30	1.4	1
H11A1	50	10	10	0.4	10	0.5	1.2/1.3	2	10	100		30	1.5	10
H11A550	50	10	10	0.4	20	2	5*/5*	2	10	100		30	1.5	10
H11AV2	50	10	10	0.4	20	2	5*/4*	2	10	100		70	1.5	10
TIL117	50	10	10	0.4	10	0.5	5/5	2	10	100		30	1.4	16
TIL126	50	10	10	0.4	10	1	2/2	2	10	100		30	1.4	10
SL5501	45–250	10	0.4	0.4	20	2	20*/50*		5	1k	16	30	1.3	20
CNY17-2	63–125	10	5	0.4	10	2.5	1.6/2.3		5	75	10	70	1.65	60
MCT275	70–210	10	10	0.4	16	2	4.5*/3.5*	2	5	100		80	1.5	20
MCT272	75–150	10	10	0.4	16	2	6*/5.5*	2	5	100		30	1.5	20
4N35	100	10	10	0.3	10	0.5	3.2/4.7	2	10	100		30	1.5	10
4N36	100	10	10	0.3	10	0.5	3.2/4.7	2	10	100		30	1.5	10
4N37	100	10	10	0.3	10	0.5	3.2/4.7	2	10	100		30	1.5	10
H11A5100	100	10	10	0.4	20	2	5*/5*	2	10	100		30	1.5	10
CNY17-3	100–200	10	5	0.4	10	2.5	1.6/2.3		5	75	10	70	1.65	60
SL5500	50–300	10	0.4	0.4	50	10	20*/50*		5	1k	16	30	1.3	20
H11AV1	100–300	10	10	0.4	20	2	5*/4*	2	10	100		70	1.5	10
MCT273	125–250	10	10	0.4	16	2	7.6*/6.6*	2	5	100		30	1.5	20
MCT274	225–400	10	10	0.4	16	2	9.1*/7.9*	2	5	100		30	1.5	20

Table 2 — Transistor Output with No Base Connection

Pinout: 1-Anode, 2-Cathode, 3-N.C., 4-Emitter, 5-Collector, 6-N.C. (Style 3)

MOC8101	50–80	10	10	0.4	5	0.5	3.2/4.7	2	10	100		30	1.5	10
MOC8102	73–117	10	10	0.4	5	0.5	3.2/4.7	2	10	100		30	1.5	10
MOC8103	108–173	10	10	0.4	5	0.5	3.2/4.7	2	10	100		30	1.5	10
MOC8104	160–256	10	10	0.4	5	0.5	3.2/4.7	2	10	100		30	1.5	10
MOC8111	20	10	10	0.4	10	0.5	3.2/4.7	2	10	100		30	1.5	10
CNX82	40	10	0.4	0.4	10	4	3/3*	2	5	100		50	1.5	10
MOC8112	50	10	10	0.4	10	0.5	3.2/4.7	2	10	100		30	1.5	10
MOC8113	100	10	10	0.4	10	0.5	3.2/4.7	2	10	100		30	1.5	10

Devices listed in bold, italic are Motorola preferred devices.

Optoisolators (continued)

CASE 730A-03

Table 3 — AC Input – Transistor Output

Pinout: 1-LED 1 Anode/LED 2 Cathode, 2-LED 1 Cathode/LED 2 Anode, 3-N.C., 4-Emitter, 5-Collector, 6-Base (Style 8)

Device	Current Transfer Ratio (CTR) % Min	@ I_F mA	V_{CE} Volts	$V_{CE(sat)}$ Volts Max	@ I_F mA	I_C mA	t_r/t_f or t_{on}*/t_{off}* Typ µs	@ I_C mA	V_{CC} Volts	R_L Ω	I_F mA	$V_{(BR)CEO}$ Volts Min	V_F Volts Max	@ I_F mA
H11AA1	20	±10	10	0.4	±10	0.5						30	1.5	±10
H11AA2	10	±10	10	0.4	±10	0.5						30	1.8	±10
H11AA3	50	±10	10	0.4	±10	0.5						30	1.5	±10
H11AA4	100	±10	10	0.4	±10	0.5						30	1.5	±10

Table 4 — AC Input – Resistor Darlington Output

Pinout: 1-LED 1 Anode/LED 2 Cathode, 2-LED 1 Cathode/LED 2 Anode, 3-N.C., 4-Emitter, 5-Collector, 6-Base (Style 8)

MOC8060	1000	±10	10	2	±10	100						50	1.5	±10

Table 5 — Darlington Output

Pinout: 1-Anode, 2-Cathode, 3-N.C., 4-Emitter, 5-Collector, 6-Base (Style 1)

4N31	50	10	10	1.2	8	2	0.6*/17*	50	10		200	30	1.5	10
4N29,A	100	10	10	1	8	2	0.6*/17*	50	10		200	30	1.5	10
4N30	100	10	10	1	8	2	0.6*/17*	50	10		200	30	1.5	10
H11B255	100	10	5	1	50	50	125*/100*	10	10	100		55	1.5	20
MCA230	100	10	5	1	50	50	10/35		10	100	50	30	1.5	20
MCA255	100	10	5	1	50	50	10/35		10	100	50	55	1.5	20
H11B2	200	1	5	1	1	1	1/2	10	10	100		25	1.5	10
MCA231	200	1	1	1.2	10	50	80	10	10	100		30	1.5	20
TIL113	300	10	1.25	1	50	125	300	125	15	100		30	1.5	10
4N32,A	500	10	10	1	8	2	0.6*/45*	50	10		200	30	1.5	10
4N33	500	10	10	1	8	2	0.6*/45*	50	10		200	30	1.5	10
H11B1	500	1	5	1	1	1	1/2	10	10	100		25	1.5	10
MOC8080	500	10	5	1	1	1	1/2		10	100	5	55	1.5	10

Table 6 — Darlington Output with No Base Connection

Pinout: 1-Anode, 2-Cathode, 3-N.C., 4-Emitter, 5-Collector, 6-N.C. (Style 3)

MOC119	300	10	2	1	10	10	1/2	2.5	10	100		30	1.5	10
TIL119	300	10	2	1	10	10	300	2.5	10	100		30	1.5	10
MOC8030	300	10	1.5				1/2		50	100	10	80	2	10
MOC8020	500	10	5				1/2		50	100	10	50	2	10
MOC8050	500	10	1.5				1/2		50	100	10	80	2	10
MOC8021	1000	10	5				1/2		50	100	10	50	2	10

Table 7 — Resistor Darlington Output

Pinout: 1-Anode, 2-Cathode, 3-N.C., 4-Emitter, 5-Collector, 6-Base (Style 1)

H11G1	1000	10	1	1	1	1	5*/100*		5	100	10	100	1.5	10
H11G2	1000	10	1	1	1	1	5*/100*		5	100	10	80	1.5	10
H11G3	200	1	5	1.2	50	20	5*/100*		5	100	10	55	1.5	10

Table 8 — High Voltage Transistor Output

Pinout: 1-Anode, 2-Cathode, 3-N.C., 4-Emitter, 5-Collector, 6-Base (Style 1)

MOC8204	20	10	10	0.4	10	0.5	5*/5*	2	10	100		400	1.5	10
H11D1	20	10	10	0.4	10	0.5	5*/5*	2	10	100		300	1.5	10
H11D2	20	10	10	0.4	10	0.5	5*/5*	2	10	100		300	1.5	10
H11D3	20	10	10	0.4	10	0.5	5*/5*	2	10	100		200	1.5	10
H11D4	10	10	10	0.4	10	0.5	5*/5*	2	10	100		200	1.5	10
4N38	10	10	10	1	20	4	1.6/2.2	10	10			80	1.5	10
4N38A	10	10	10	1	20	4	1.6/2.2	10	10			80	1.5	10
MCT275	70–210	10	10	0.4	16	2	4.5*/3.5*	2	5	100		80	1.5	20

Devices listed in bold, italic are Motorola preferred devices.

6-Pin Dual Inline Package (continued)

Table 9 — Triac Driver Output

Pinout: 1-Anode, 2-Cathode, 3-N.C., 4-Main Terminal, 5-Substrate, 6-Main Terminal (Style 6)

Device	Peak Blocking Voltage Min	LED Trigger Current-I_{FT} (V_{TM} = 3 V) mA Max	Zero Crossing Inhibit Voltage (at rated I_{FT}) Volts Max	Operating Voltage Vac Pk	dv/dt V/μs Typ
MOC3009	250	30	—	125	10
MOC3010	250	15	—	125	10
MOC3011	250	10	—	125	10
MOC3012	250	5	—	125	10
MOC3020	400	30	—	125/220	10
MOC3021	400	15	—	125/220	10
MOC3022	400	10	—	125/220	10
MOC3023	400	5	—	125/220	10
MOC3031	250	15	20	125	2000
MOC3032	250	10	20	125	2000
MOC3033	250	5	20	125	2000
MOC3041	400	15	20	125/240	2000
MOC3042	400	10	20	125/240	2000
MOC3043	400	5	20	125/240	2000
MOC3061	600	15	20	280	1500
MOC3062	600	10	20	280	1500
MOC3063	600	5	20	280	1500
MOC6005	600	5	15	280	2500
MOC6010	600	10	15	280	2500
MOC3081	800	15	20	320	1500
MOC3082	800	10	20	320	1500
MOC3083	800	5	20	320	1500

Table 10 — Schmitt Trigger Output

Pinout: 1-Anode, 2-Cathode, 3-N.C., 4-Output, 5-Ground, 6-V_{CC} (Style 5)

Device	Threshold Current On mA Max	Threshold Current Off mA Min	$I_{F(off)}/I_{F(on)}$		V_{CC}		t_r, t_f μs Typ	V_{ISO} Vac Pk
			Min	Max	Min	Max		
H11L1	1.6	0.3	0.5	0.9	3	15	0.1	7500
H11L2	10	0.3	0.5	0.9	3	15	0.1	7500
MOC5007	1.6	0.3	0.5	0.9	3	15	0.1	7500
MOC5008	4	0.3	0.5	0.9	3	15	0.1	7500
MOC5009	10	0.3	0.5	0.9	3	15	0.1	7500

Devices listed in bold, italic are Motorola preferred devices.

Optoisolators (continued)

CASE 846-01
SO-8 DEVICES

Small Outline — Surface Mount

Table 11 — Transistor Output

Pinout: 1-Anode, 2-Cathode, 3-N.C., 4-N.C., 5-Emitter, 6-Collector, 7-Base, 8-N.C. (Style 1)

Device	Marking	Current Transfer Ratio			$V_{CE(sat)}$			t_r/t_f Typ				$V_{(BR)CEO}$	V_F	
		% Min	@ I_F mA	V_{CE} Volts	Volts Max	@ I_F mA	I_C mA	µs	@ I_C mA	V_{CC} Volts	R_L Ω	Volts Min	Volts Max	@ I_F mA
MOC205R1/R2	M205	40–80	10	10	0.4	10	2	1.6	2	10	100	70	1.5	10
MOC206R1/R2	M206	63–125	10	10	0.4	10	2	1.6	2	10	100	70	1.5	10
MOC207R1/R2	M207	100–200	10	10	0.4	10	2	1.6	2	10	100	70	1.5	10
MOC211R1/R2	M211	20	10	10	0.4	10	2	3.2	2	10	100	30	1.5	10
MOC212R1/R2	M212	50	10	10	0.4	10	2	3.2	2	10	100	30	1.5	10
MOC213R1/R2	M213	100	10	10	0.4	10	2	3.2	2	10	100	30	1.5	10
MOC215R1/R2	M215	20	10	5	0.4	1	0.1	3.2	2	10	100	30	1.3	1
MOC216R1/R2	M216	50	10	5	0.4	1	0.1	3.2	2	10	100	30	1.3	1
MOC217R1/R2	M217	100	10	5	0.4	1	0.1	3.2	2	10	100	30	1.3	1

Table 12 — Darlington Output

Pinout: 1-Anode, 2-Cathode, 3-N.C., 4-N.C., 5-Emitter, 6-Collector, 7-Base, 8-N.C. (Style 1)

MOC221R1/R2	M221	100	1	5	1	1	0.5	2	5	10	100	30	1.3	1
MOC222R1/R2	M222	200	1	5	1	1	0.5	2	5	10	100	30	1.3	1
MOC223R1/R2	M223	500	1	5	1	1	0.5	2	5	10	100	30	1.3	1

All devices are shipped in tape and reel format. (See Tape and Reel Specifications and Packaging Specifications, Section 5.10, for more information)

Devices listed in bold, italic are Motorola preferred devices.

Surface Mount

(S) CASE 730C-03
(F) CASE 730F-02

Table 13 — Transistor Output
Pinout: 1-Anode, 2-Cathode, 3-N.C., 4-Emitter, 5-Collector, 6-Base (Style 1)

Device	Current Transfer Ratio (CTR) % Min	@ I_F mA	V_{CE} Volts	$V_{CE(sat)}$ Volts Max	@ I_F mA	I_C mA	t_r/t_f or $t_{on}*/t_{off}*$ Typ µs	@ I_C mA	V_{CC} Volts	R_L Ω	I_F mA	$V_{(BR)CEO}$ Volts Min	V_F Volts Max	@ I_F mA
TIL112S,F	2	10	5	0.5	50	2	2/2	2	10	100		20	1.5	10
TIL111S,F	8	16	0.4	0.4	16	2	5/5	2	10	100		30	1.4	16
4N27S,F	10	10	10	0.5	50	2	1.2/1.3	10	10	100		30	1.5	10
4N28S,F	10	10	10	0.5	50	2	1.2/1.3	10	10	100		30	1.5	10
4N38S,F	10	10	10	1	20	4	1.6/2.2	10	10	100		80	1.5	10
H11A4S,F	10	10	10	0.4	10	0.5	1.2/1.3	2	10	100		30	1.5	10
4N25S,F	20	10	10	0.5	50	2	1.2/1.3	10	10	100		30	1.5	10
4N25AS,F	20	10	10	0.5	50	2	1.2/1.3	10	10	100		30	1.5	10
4N26S,F	20	10	10	0.5	50	2	1.2/1.3	10	10	100		30	1.5	10
H11A2S,F	20	10	10	0.4	10	0.5	1.2/1.3	2	10	100		30	1.5	10
H11A3S,F	20	10	10	0.4	10	0.5	1.2/1.3	2	10	100		30	1.5	10
H11A520S,F	20	10	10	0.4	20	2	5*/5*	2	10	100		30	1.5	10
H11AV3S,F	20	10	10	0.4	20	2	5*/4*	2	10	100		70	1.5	10
MCT2S,F	20	10	10	0.4	16	2	1.2/1.3		5	2k	15	30	1.5	20
MCT2ES,F	20	10	10	0.4	16	2	1.2/1.3	2	10	100		30	1.5	20
TIL116S,F	20	10	10	0.4	15	2.2	5/5	2	10	100		30	1.5	60
H11A5S,F	30	10	10	0.4	10	0.5	1.2/1.3	2	10	100		30	1.7	10
CNX35S,F	40–160	10	0.4	0.4	10	2	3/3*	2	5	100		30	1.5	10
CNX36S,F	80–200	10	0.4	0.4	10	4	8/6*	2	5	100		30	1.5	10
CNX83S,F	40	10	0.4	0.4	10	4	3/3*	2	5	100		50	1.5	10
CNY17-1S,F	40–80	10	5	0.4	10	2.5	1.6/2.3		5	75	10	70	1.65	60
MCT271S,F	45–90	10	10	0.4	16	2	4.9*/4.5*	2	5	100		30	1.5	20
MOC8100S,F	50	1	5	0.5	1	0.1	3.8/5.6	2	10	100		30	1.4	1
H11A1S,F	50	10	10	0.4	10	0.5	1.2/1.3	2	10	100		30	1.5	10
H11A550S,F	50	10	10	0.4	20	2	5*/5*	2	10	100		30	1.5	10
H11AV2S,F	50	10	10	0.4	20	2	5*/4*	2	10	100		70	1.5	10
TIL117S,F	50	10	10	0.4	10	0.5	5/5	2	10	100		30	1.4	16
TIL126S,F	50	10	10	0.4	10	1	2/2	2	10	100		30	1.4	10
SL5501S,F	45–250	10	0.4	0.4	20	2	20*/50*		5	1k	16	30	1.3	20
CNY17-2S,F	63–125	10	5	0.4	10	2.5	1.6/2.3		5	75	10	70	1.65	60
MCT275S,F	70–210	10	10	0.4	16	2	4.5*/3.5*	2	5	100		80	1.5	20
MCT272S,F	75–150	10	10	0.4	16	2	6*/5.5*	2	5	100		30	1.5	20
4N35S,F	100	10	10	0.3	10	0.5	3.2/4.7	2	10	100		30	1.5	10
4N36S,F	100	10	10	0.3	10	0.5	3.2/4.7	2	10	100		30	1.5	10
4N37S,F	100	10	10	0.3	10	0.5	3.2/4.7	2	10	100		30	1.5	10
H11A5100S,F	100	10	10	0.4	20	2	5*/5*	2	10	100		30	1.5	10
CNY17-3S,F	100–200	10	5	0.4	10	2.5	1.6/2.3		5	75	10	70	1.65	60
SL5500S,F	50–300	10	0.4	0.4	50	10	20*/50*		5	1k	16	30	1.3	20
H11AV1S,F	100–300	10	10	0.4	20	2	5*/4*	2	10	100		70	1.5	10
MCT273S,F	125–250	10	10	0.4	16	2	7.6*/6.6*	2	5	100		30	1.5	20
MCT274S,F	225–400	10	10	0.4	16	2	9.1*/7.9*	2	5	100		30	1.5	20

Table 14 — Transistor Output with No Base Connection
Pinout: 1-Anode, 2-Cathode, 3-N.C., 4-Emitter, 5-Collector, 6-N.C. (Style 3)

MOC8101S,F	50–80	10	10	0.4	5	0.5	3.2/4.7	2	10	100		30	1.5	10
MOC8102S,F	73–117	10	10	0.4	5	0.5	3.2/4.7	2	10	100		30	1.5	10
MOC8103S,F	108–173	10	10	0.4	5	0.5	3.2/4.7	2	10	100		30	1.5	10
MOC8104S,F	160–256	10	10	0.4	5	0.5	3.2/4.7	2	10	100		30	1.5	10
MOC8111S,F	20	10	10	0.4	10	0.5	3.2/4.7	2	10	100		30	1.5	10
CNX82S,F	40	10	0.4	0.4	10	4	3/3*	2	5	100		50	1.5	10
MOC8112S,F	50	10	10	0.4	10	0.5	3.2/4.7	2	10	100		30	1.5	10
MOC8113S,F	100	10	10	0.4	10	0.5	3.2/4.7	2	10	100		30	1.5	10

For Surface Mountable standard leadform, Order "S" suffix devices; e.g., MOC3043S.
For low profile Surface Mountable leadform, Order "F" suffix devices; e.g., MOC5007F. (See Package Outline Dimensions and Footprints, Section 5.11, for more information)
For 24MM Tape and Reel, add R2 suffix to the 6-pin optoisolator part number; e.g., H11A1SR2. (See Tape and Reel Specifications and Packaging Specifications, Section 5.10, for more information)

Devices listed in bold, italic are Motorola preferred devices.

Optoisolators (continued)

(S) CASE 730C-03
(F) CASE 730F-02

Table 15 — AC Input – Transistor Output
Pinout: 1-LED 1 Anode/LED 2 Cathode, 2-LED 1 Cathode/LED 2 Anode, 3-N.C., 4-Emitter, 5-Collector, 6-Base (Style 8)

	Current Transfer Ratio (CTR)			$V_{CE(sat)}$			t_r/t_f or t_{on}*/t_{off}* Typ					$V_{(BR)CEO}$	V_F	
Device	% Min	@ I_F mA	V_{CE} Volts	Volts Max	@ I_F mA	I_C mA	µs	@ I_C mA	V_{CC} Volts	R_L Ω	I_F mA	Volts Min	Volts Max	@ I_F mA
H11AA1S,F	20	±10	10	0.4	±10	0.5						30	1.5	±10
H11AA2S,F	10	±10	10	0.4	±10	0.5						30	1.8	±10
H11AA3S,F	50	±10	10	0.4	±10	0.5						30	1.5	±10
H11AA4S,F	100	±10	10	0.4	±10	0.5						30	1.5	±10

Table 16 — AC Input – Resistor Darlington Output
Pinout: 1-LED 1 Anode/LED 2 Cathode, 2-LED 1 Cathode/LED 2 Anode, 3-N.C., 4-Emitter, 5-Collector, 6-Base (Style 8)

MOC8060S,F	1000	±10	10	2	±10	100						50	1.5	±10

Table 17 — Darlington Output
Pinout: 1-Anode, 2-Cathode, 3-N.C., 4-Emitter, 5-Collector, 6-Base (Style 1)

4N31S,F	50	10	10	1.2	8	2	0.6*/17*	50	10		200	30	1.5	10
4N29S,F	100	10	10	1	8	2	0.6*/17*	50	10		200	30	1.5	10
4N30S,F	100	10	10	1	8	2	0.6*/17*	50	10		200	30	1.5	10
H11B255S,F	100	10	5	1	50	50	125*/100*	10	10	100		55	1.5	20
MCA230S,F	100	10	5	1	50	50	10/35		10	100	50	30	1.5	20
MCA255S,F	100	10	5	1	50	50	10/35		10	100	50	55	1.5	20
H11B2S,F	200	1	5	1	1	1	1/2	10	10	100		25	1.5	10
MCA231S,F	200	1	1	1.2	10	50	80	10	10	100		30	1.5	20
TIL113S,F	300	10	1.25	1	50	125	300	125	15	100		30	1.5	10
4N32S,F	500	10	10	1	8	2	0.6*/45*	50	10		200	30	1.5	10
4N33S,F	500	10	10	1	8	2	0.6*/45*	50	10		200	30	1.5	10
H11B1S,F	500	1	5	1	1	1	1/2	10	10	100		25	1.5	10
MOC8080S,F	500	10	5	1	1	1	1/2		10	100	5	55	1.5	10

Table 18 — Darlington Output with No Base Connection
Pinout: 1-Anode, 2-Cathode, 3-N.C., 4-Emitter, 5-Collector, 6-N.C. (Style 3)

MOC119S,F	300	10	2	1	10	10	1/2	2.5	10	100		30	1.5	10
TIL119S,F	300	10	2	1	10	10	300	2.5	10	100		30	1.5	10
MOC8030S,F	300	10	1.5				1/2		50	100	10	80	2	10
MOC8020S,F	500	10	5				1/2		50	100	10	50	2	10
MOC8050S,F	500	10	1.5				1/2		50	100	10	80	2	10
MOC8021S,F	1000	10	5				1/2		50	100	10	50	2	10

Table 19 — Resistor Darlington Output
Pinout: 1-Anode, 2-Cathode, 3-N.C., 4-Emitter, 5-Collector, 6-Base (Style 1)

H11G1S,F	1000	10	1	1	1	1	5*/100*		5	100	10	100	1.5	10
H11G2S,F	1000	10	1	1	1	1	5*/100*		5	100	10	80	1.5	10
H11G3S,F	200	1	5	1.2	50	20	5*/100*		5	100	10	55	1.5	10

For Surface Mountable standard leadform, Order "S" suffix devices; e.g., MOC3043S.
For low profile Surface Mountable leadform, Order "F" suffix devices; e.g., MOC5007F. (See Package Outline Dimensions and Footprints, Section 5.11, for more information)
For 24MM Tape and Reel, add R2 suffix to the 6-pin optoisolator part number; e.g., H11A1SR2. (See Tape and Reel Specifications and Packaging Specifications, Section 5.10, for more information)

Devices listed in bold, italic are Motorola preferred devices.

Surface Mount (continued)

Table 20 — High Voltage Transistor Output

Pinout: 1-Anode, 2-Cathode, 3-N.C., 4-Emitter, 5-Collector, 6-Base (Style 1)

Device	Current Transfer Ratio (CTR) % Min	@ I_F mA	V_{CE} Volts	$V_{CE(sat)}$ Volts Max	@ I_F mA	I_C mA	t_r/t_f or t_{on}*/t_{off}* Typ µs	@ I_C mA	V_{CC} Volts	R_L Ω	I_F mA	$V_{(BR)CEO}$ Volts Min	V_F Volts Max	@ I_F mA
MOC8204S,F	20	10	10	0.4	10	0.5	5*/5*	2	10	100		400	1.5	10
H11D1S,F	20	10	10	0.4	10	0.5	5*/5*	2	10	100		300	1.5	10
H11D2S,F	20	10	10	0.4	10	0.5	5*/5*	2	10	100		300	1.5	10
H11D3S,F	20	10	10	0.4	10	0.5	5*/5*	2	10	100		200	1.5	10
H11D4S,F	10	10	10	0.4	10	0.5	5*/5*	2	10	100		200	1.5	10
4N38S,F	10	10	10	1	20	4	1.6/2.2	10	10			80	1.5	10
4N38A,S,F	10	10	10	1	20	4	1.6/2.2	10	10			80	1.5	10
MCT275S,F	70–210	10	10	0.4	16	2	4.5*/3.5*	2	5	100		80	1.5	20

Table 21 — Triac Driver Output

Pinout: 1-Anode, 2-Cathode, 3-N.C., 4-Main Terminal, 5-Substrate, 6-Main Terminal (Style 6)

Device	Peak Blocking Voltage Min	LED Trigger Current-I_{FT} (V_{TM} = 3 V) mA Max	Zero Crossing Inhibit Voltage (at rated I_{FT}) Volts Max	Operating Voltage Vac Pk	dv/dt V/µs Typ
MOC3009S,F	250	30	—	125	10
MOC3010S,F	250	15	—	125	10
MOC3011S,F	250	10	—	125	10
MOC3012S,F	250	5	—	125	10
MOC3020S,F	400	30	—	125/220	10
MOC3021S,F	400	15	—	125/220	10
MOC3022S,F	400	10	—	125/220	10
MOC3023S,F	400	5	—	125/220	10
MOC3031S,F	250	15	20	125	2000
MOC3032S,F	250	10	20	125	2000
MOC3033S,F	250	5	20	125	2000
MOC3041S,F	400	15	20	125/220	2000
MOC3042S,F	400	10	20	125/220	2000
MOC3043S,F	400	5	20	125/220	2000
MOC3061S,F	600	15	20	280	1500
MOC3062S,F	600	10	20	280	1500
MOC3063S,F	600	5	20	280	1500
MOC6005S,F	600	5	15	280	2500
MOC6010S,F	600	10	15	280	2500
MOC3081S,F	800	15	20	320/280	1500
MOC3082S,F	800	10	20	320/280	1500
MOC3083S,F	800	5	20	320/280	1500

Table 22 — Schmitt Trigger Output

Pinout: 1-Anode, 2-Cathode, 3-N.C., 4-Output, 5-Ground, 6-V_{CC} (Style 5)

Device	Threshold Current On mA Max	Threshold Current Off mA Min	$I_{F(off)}/I_{F(on)}$ Min	$I_{F(off)}/I_{F(on)}$ Max	V_{CC} Min	V_{CC} Max	t_r, t_f µs Typ	V_{ISO} Vac Pk
H11L1S,F	1.6	0.3	0.5	0.9	3	15	0.1	3535
H11L2S,F	10	0.3	0.5	0.9	3	15	0.1	3535
MOC5007S,F	1.6	0.3	0.5	0.9	3	15	0.1	
MOC5008S,F	4	0.3	0.5	0.9	3	15	0.1	
MOC5009S,F	10	0.3	0.5	0.9	3	15	0.1	

For Surface Mountable standard leadform, Order "S" suffix devices; e.g., MOC3043S.
For low profile Surface Mountable leadform, Order "F" suffix devices; e.g., MOC5007F. (See Package Outline Dimensions and Footprints, Section 5.11, for more information)
For 24MM Tape and Reel, add R2 suffix to the 6-pin optoisolator part number; e.g., H11A1SR2. (See Tape and Reel Specifications and Packaging Specifications, Section 5.10, for more information)

Devices listed in bold, italic are Motorola preferred devices.

Emitters/Detectors

Infrared Emitting Diodes

Motorola's infrared emitting diodes are made by the liquid phase epitaxial process for long life and stability. They provide high power output and quick response at 660 nm, 850 nm or 940 nm with low input drive current.

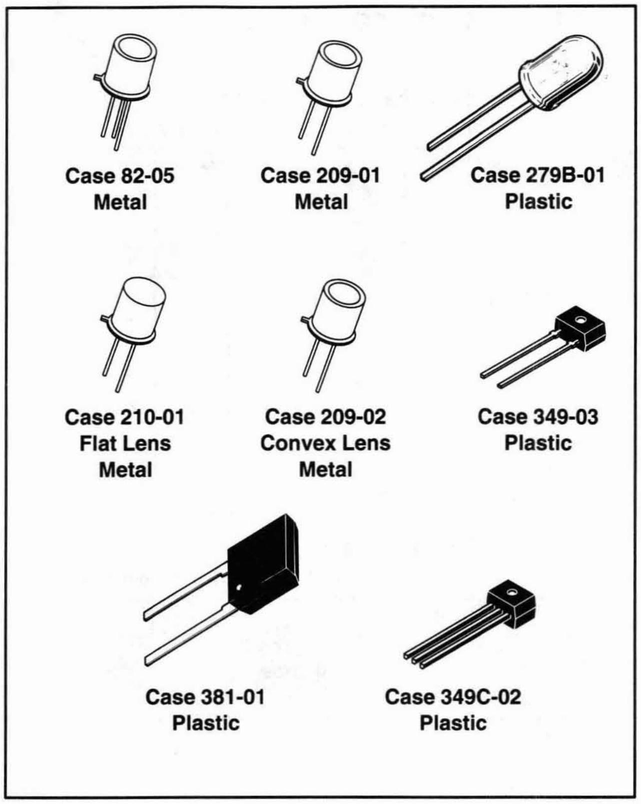

Table 23 — Infrared Emitting Diodes

Device	Power Output µW Typ	Power Output @ I_F mA	Emission Angle Typ	Peak Emission Wavelength nm Typ	Forward Voltage Max	Forward Voltage @ I_F mA	Case/ Style
MLED71	2500	50	60°	940	1.8	50	349-03/1
MLED76	4000	100	60°	660	2.2	60	349-03/4
MLED77	2500	100	60°	850	2	100	349-03/4
MLED81	16000	100	60°	940	1.7	100	279B-01/1
MLED930	650	100	30°	940	1.5	50	209-01/1

Silicon Photodetectors

A variety of silicon photodetectors are available, varying from simple PIN diodes to complex, single chip 400 volt triac drivers. They offer choices of viewing angle and size in either economical plastic cases or rugged, hermetic metal cans. They are spectrally matched for use with Motorola infrared emitting diodes.

Table 24 — PIN Photodiodes – Response Time = 1 ns Typ

Device	Light Current @ V_R = 20 V, H = 5 mW/cm^2 µA	Dark Current @ V_R = 20 V nA (Max)	Case/ Style
MRD500	9	2	209-02/1
MRD510	2	2	210-01/1
MRD721	4	10	349-03/1
MRD821	250	60	381-01/1

Table 25 — Phototransistors

Device	Light Current @ V_{CC}=20, H=5 mW/cm^2 mA (Typ)	$V_{(BR)CEO}$ Volts (Min)	t_r/t_f @ V_{CC}=20, I_L = 1000 µA µs (Typ)	Case/ Style
MRD310	3.5	50	2/2.5	82-05/1
MRD300	8	50	2/2.5	
MRD3050	0.1 Min	30	2/2.5	
MRD3051	0.2 Min	30	2/2.5	
MRD3054	0.5 Min	30	2/2.5	
MRD3055	1.5 Min	30	2/2.5	
MRD3056	2 Min	30	2/2.5	
			t_{on}/t_{off} @ V_{CC}=5 V	
MRD701	0.5	30	10/60	349-03/2

See Package Outline Dimensions and Footprints, Section 5.11, for styles and pinout information.

Devices listed in bold, italic are Motorola preferred devices.

Table 26 — Photodarlingtons

Device	Light Current @ V_{CC}=5, H=0.5 mW/cm^2 mA (Typ)	$V_{(BR)CEO}$ Volts (Min)	t_r/t_f @ V_{CC}=5 V µs (Typ)	Case/ Style
MRD370	10	40	15/40	82-05/1
MRD360	20	40	15/65	
MRD711	25	60	125/150	349-03/2

Table 27 — Photo Triac Drivers

Device	H_{FT} mW/cm^2 Max	$I_{T(RMS)}$ mA Max	V_{DRM} Volts Peak Min	I_{DRM} nA Typ	Case/ Style
MRD3010	5	100	250	10	82-05/3

Table 28 — Photo Schmitt Triggers

Device	Threshold Current mA ON Max	Threshold Current mA OFF Min	$I_{F(off)}/I_{F(on)}$ Typ	V_{CC} Volts	t_r/t_f µs Typ	Case/ Style
MRD750	20	1	0.75	3–15	0.1	349C-02/3
MRD5009	20	1	0.75	3–15	0.1	82-05/1

Optointerrupters

An Optointerrupter consists of an infrared emitting diode facing a photodetector in a molded plastic housing. A slot in the housing between the emitter and detector provides a means for interrupting the signal transmission.

Motorola Optointerrupters are available in a wide selection of detector functions and housings to meet the designer's system requirements.

Motorola also offers custom designed packaging in a broad range of output functions, including those shown below, and more. Contact your nearest Motorola Sales Office or call us at 602-BIG-OPTO.

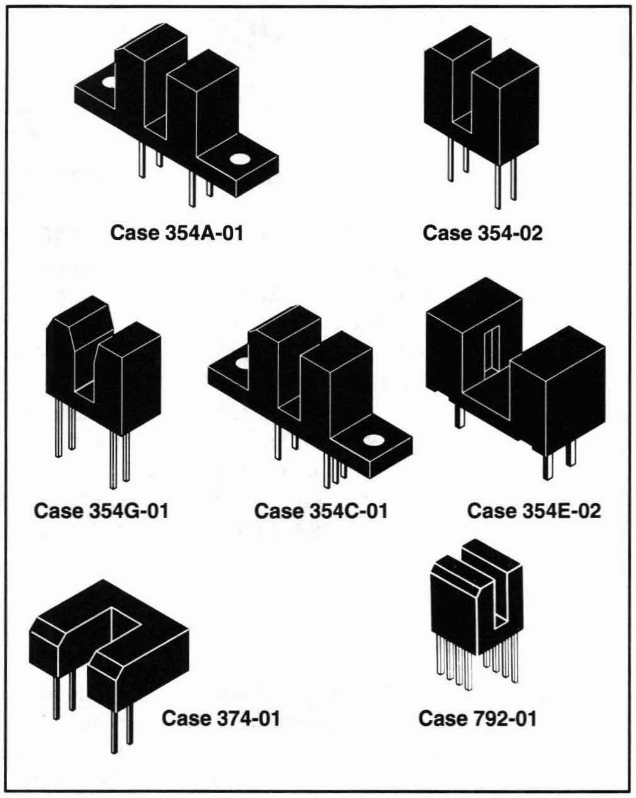

Table 29 — Transistor

Device	Current Transfer Ratio % Min	@ I_F mA	V_{CE} Volts	$V_{CE(sat)}$ Volts Max	@ I_F mA	I_C mA	V_F Volts Max	@ I_F mA	Output Voltage Range Volts Max	Package Case/Style
H21A1	5	20	5	0.4	30	1.8	1.7	60	30	354A-01/1
H21A2	10	20	5	0.4	20	1.8	1.7	60	30	354A-01/1
H21A3	20	20	5	0.4	20	1.8	1.7	60	30	354A-01/1
H22A1	5	20	5	0.4	30	1.8	1.7	60	30	354-02/1
H22A2	10	20	5	0.4	20	1.8	1.7	60	30	354-02/1
H22A3	20	20	5	0.4	20	1.8	1.7	60	30	354-02/1
MOC70H1	5	20	10	0.4	30	1.8	1.8	50	30	374-01/2
MOC70H2	10	20	10	0.4	20	1.8	1.8	50	30	374-01/2
MOC70P1	5	20	10	0.4	30	1.8	1.8	50	30	354E-02/1
MOC70P2	10	20	10	0.4	20	1.8	1.8	50	30	354E-02/1
MOC70V1	5	20	10	0.4	30	1.8	1.8	50	30	354G-01/1

Table 30 — Dual Channel

MOC70W1	0.5	20	10	0.4	20	0.1	1.8	50	30	792-01/2

Table 31 — Darlington

H21B1	75	10	1.5	1	10	1.8	1.7	60	30	354A-01/1
H22B1	75	10	1.5	1	10	1.8	1.7	60	30	354-02/1

Table 32 — Logic

Device	LED Trigger Current mA	Hysteresis Ratio $I_{F(off)}/I_{F(on)}$	$t_{(on)}/t_{(off)}$ µs	V_F Volts Max	@ I_F mA	Output Voltage Range Volts	Package Case/Style
MOC75T1	30	0.75	1.2	1.6	20	3–15	354C-01/1

See Package Outline Dimensions and Footprints, Section 5.11, for styles and pinout information.

Devices listed in bold, italic are Motorola preferred devices.

Fiber Optic Components

Emitters

Motorola offers two families of emitters for fiber optic systems.

- **"High Performance"** family in hermetic Case 210 for systems requiring greater than 100 MHz analog bandwidth over several kilometers. An additional family in Case 210 provides electrical performance (120 MHz) over moderate distances (500 meters) and is specified for use with hard clad silica fiber (Ensign-Bickford HCP — MO200T-06)
- **"POF"** family in unique Plastic Optic Fiber package is designed for applications requiring low cost, speeds up to 10 MHz and distances under 200 meters. (The POF package serves as its own connector.) It is used with inexpensive 1000 micron plastic core fiber (Eska SH4001).

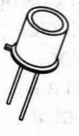

Case 209-02

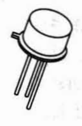

Case 210A-01
TO-206AC
(TO-52)

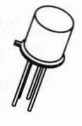

Case 210D-01
(TO-52 Type)

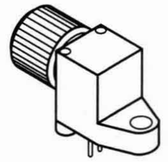

POF
Case 363B-01
(2-lead)

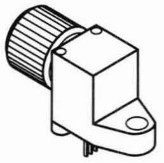

POF
Case 363C-01
(3-lead)

Detectors

Detectors are available with a variety of output configurations that greatly affect Bandwidth and Responsivity.

All Motorola fiber optic components, except the FLCS family, are designed for use with 100 micron (or larger) core glass fiber and fit directly into the following industry standard connector systems. AMP #228756-1, AMPHENOL #905-138-5001, OFTI #PCR001.

Table 33 — Emitters

Device	Total Power Output mW Typ	@ I_F mA	Response Time t_r ns Typ	t_f ns Typ	λ nm Typ	Case/Style
MFOE71	3.5	100	25	25	850	363B-01/1
MFOE76	3.5	100	200	150	660	
MFOE200	3	100	250	250	940	209-02/1
MFOE1100	2.6	100	15	16	850	210A-01/1
MFOE1101	4	100	15	16	850	
MFOE1102	5	100	15	16	850	
MFOE1200	0.9	100	5	5	850	210A-01/1
MFOE1201	1.5	100	2.8	3.5	850	
MFOE1202	2.4	100	2.8	3.5	850	
MFOE1203	2.8	100	2.8	3.5	850	
MFOE1300	5	100	15	16	850	210A-01/1
MFOE1400	2.5	100	2.8	3.5	850	

See Package Outline Dimensions and Footprints, Section 5.11, for styles and pinout information.

Devices listed in bold, italic are Motorola preferred devices.

Detectors (continued)

Table 34 — Detectors

Device	BWE MHz	Responsivity μA/μW Typ	Response Time μs Typ t_{on}* t_r	t_{off}* t_f	$V_{(BR)}$ Volts Min	Case/Style
Photo PIN Diodes						
MFOD1100	350	0.35	0.5 ns	0.5 ns	50	210A-01/1
MFOD71	70	0.2	1* ns	1* ns	100	363B-01/3
Phototransistors						
MFOD72	6 kHz	125	10*	60*	30	363B-01/2
Photodarlingtons						
MFOD73	2 kHz	1500	125*	150*	60	363B-01/2
Detector Preamps		**mV/μW**			**V_{CC} Range**	
MFOD2404	10	35	0.035	0.035	4–6	210D-01/1
MFOD2405	35	6	0.010	0.010	4–6	

Table 35 — Logic Level Output Detectors

Device	Light Required to Trigger −H(on) (V_{CC} = 5 V) μW Typ	Response Time t_{on} μs Typ	t_{off} μs Typ	Hysteresis Ratio H(on)/H(off) Typ	Case/Style
MFOD75	6	0.4	0.8	0.75	363C-01/1

See Package Outline Dimensions and Footprints, Section 5.11, for styles and pinout information.

Devices listed in bold, italic are Motorola preferred devices.

Fiber Optic Components (continued)

Receptacle Mounted Fiber Optic Transmitter and Receiver Components

Motorola Fiber Optic Components eliminate the time consuming and often performance robbing process of aligning fiber optic components within commercial housings. Utilizing advanced techniques Motorola can install any Motorola fiber optic component into the connector of your choice and guarantee the listed performance characteristics.

- Guaranteed Performance
- Cost Effective Installation
- Improved Coupling Efficiency
- Lowers Connector Loss
- High Launched Power
- Industry Standard Connectors
- Designed for 100 Micron Core Fibers (62.5 and 50 Micron Core Fibers Available)
- MFOE1300/1400 Designed for use with 200 Micron Core Hard Clad Silica Fiber (Ensign-Bickford HCP-MO200T-06)
- Connectors Designed for Board or Panel Mounting
- If you desire another connector type, or are using a fiber core diameter other than 100 µm, please contact us at 602-BIG-OPTO

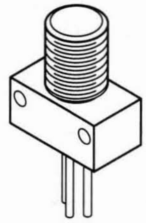

Case 364-01
LOW PROFILE SMA

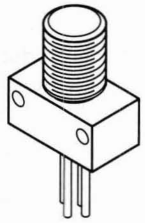

Case 364A-01
LOW PROFILE SMA

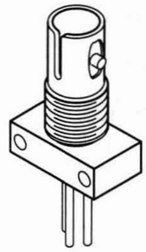

Case 364B-01
LOW PROFILE ST®

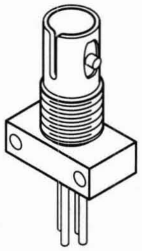

Case 364C-01
LOW PROFILE ST®

ORDERING INFORMATION

To order Fiber Optic Components simply add the connector suffix to the Motorola base device designation. For example: to order an MFOE1201 fiber optic emitter in an SMA low profile connector order part number MFOE1201SMA.

Detectors

Device	BWE MHz	Responsivity µA/µW Typ	Response Time µs Typ: t_{on} t_r	Response Time µs Typ: t_{off} t_f	$V_{(BR)}$ Volts Min
Table 36 — Photo Pin Diodes					
MFOD1100	350	0.35	0.5 ns	0.5 ns	50
Table 37 — Detector Preamps					
		mV/µW			V_{CC} Range
MFOD2404	10	35	0.035	0.035	4–6
MFOD2405	35	6	0.01	0.01	4–6

ST® is a registered trademark of AT&T

Devices listed in bold, italic are Motorola preferred devices.

Table 38 — Emitters

Device	Power Launched µW Min	Power Launched Max	I_F mA	Response Time t_r ns Typ	Response Time t_f ns Typ	λ nm Typ
MFOE200			100			940
MFOE1100	60	—	100	15	16	850
MFOE1101	120	240	100	15	16	850
MFOE1102	180	360	100	15	16	850
MFOE1200	60	—	100	5	5	850
MFOE1201	40	80	100	2.8	3.5	850
MFOE1202	75	150	100	2.8	3.5	850
MFOE1203	135	270	100	2.8	3.5	850
MFOE1300	1000	—	100	15	16	850
MFOE1400	800	—	100	2.8	3.5	850

Optoelectronic Chips

Motorola offers Optoelectronic Chips for use in hybrid assembly and other customer applications. These chips are the same high quality, high performance Light Emitting Diodes and Detectors utilized in Motorola Optoisolators and Discrete components.

- All dice have Aluminum front metallization (minimum 10000 Å) and Gold back metal (minimum 15000 Å).
- All wafers are .008 to .010 inch thick
- All wafers are unsawn and shipped in Anti-static protective containers
- Minimum order quantity is one whole wafer, see "Good Die Per Wafer" column for estimated die quantity
- All shipments in whole wafer increments

Features and Ordering Information

Table 39 — LED

Chip Part Number	Die Geometry Reference #	Parameter	Symbol	Min	Typ	Max	Units	Estimated Good Die Per Wafer
MLEDC1000WP	1	Peak Wavelength (I_F = 50 mA)	λ_p	—	940	—	nm	10450
		Total Power Out (I_F = 50 mA)	P_o	2	—	—	mW	
		Forward Voltage (I_F = 50 mA)	V_F	—	—	1.5	V	
MFOEC1200WP Fiber Optic	2	Peak Wavelength (I_F = 100 mAdc)	λ_p	—	850	—	nm	1470
		Total Power Out (I_F = 100 mA)	P_o	1.5	—	—	mW	
		Forward Voltage (I_F = 100 mA)	V_F	1	—	2.5	V	

Table 40 — Pin Diode

Chip Part Number	Die Geometry Reference #	Parameter	Symbol	Min	Typ	Max	Units	Estimated Good Die Per Wafer
MRDC100WP	3	Responsivity (V_R = 20 V, λ = 850 nm)	R	0.3	0.4	—	μA/μW	9868
		Dark Current (V_R = 20 V, H = 0)	I_D	—	—	10	nA	
MFODC1100WP Fiber Optic	4	Responsivity (V_R = 5 V, λ = 850 nm, P = 10 μW)	R	0.3	0.4	—	μA/μW	9868
		Dark Current (V_R = 5 V, H = 0, R_L = 1 Mohm)	I_D	—	—	1	nA	

Table 41 — Transistor

Chip Part Number	Die Geometry Reference #	Parameter	Symbol	Min	Typ	Max	Units	Estimated Good Die Per Wafer
MRDC200WP	5	Light Current (V_{CE} = 5 V, H = 5 mW/cm^2)	I_L	0.8	—	22	mA	11614
		Collector-Emitter Breakdown Voltage (I_{CE} = 100 μA)	$V_{(BR)CEO}$	40	—	—	V	

Table 42 — Darlington

Chip Part Number	Die Geometry Reference #	Parameter	Symbol	Min	Typ	Max	Units	Estimated Good Die Per Wafer
MRDC400WP	6	Light Current (V_{CE} = 5 V, H = 1 mW/cm^2)	I_L	0.8	—	20	mA	14604
		Collector-Emitter Breakdown Voltage (I_{CE} = 1 mA)	$V_{(BR)CEO}$	45	—	—	V	

Devices listed in bold, italic are Motorola preferred devices.

Optoelectronic Chips (continued)

Table 43 — Triac Driver

Chip Part Number	Die Geometry Reference #	Parameter	Symbol	Min	Typ	Max	Units	Estimated Good Chip Per Wafer
MRDC800WP Random Phase	7	Trigger Current (λ = 940 nm, V_{TM} = 3 V, R_L = 150 ohm)	H_{FT}	—	5	10	mW/cm^2	5444
		On-State RMS Current (Full Cycle 50–60 Hz)	$I_{T(RMS)}$	—	—	100	mA	
		Off-State Output Terminal Voltage	V_{DRM}	—	—	400	V	
		Peak Blocking Current (V_{DRM} = 400 V)	I_{DRM}	—	10	100	nA	
MRDC600WP Zero Crossing	8	Trigger Current (λ = 940 nm, V_{TM} = 3 V, R_L = 150 ohm)	H_{FT}	0	5	10	mW/cm^2	4182
		Peak Repetitive Current (PW = 100 μs, 120 pps)	I_T	—	—	300	mA	
		Off-State Output Terminal Voltage	V_{DRM}	—	—	600	V	
		Peak Blocking Current (V_{DRM} = 400 V)	I_{DRM}	—	60	500	nA	
		Inhibit Voltage (H = 20 mW/cm^2, MT1-MT2; voltage above which device will not trigger	V_{IH}	—	10	20	V	

Devices listed in bold, italic are Motorola preferred devices.

Opto Chips

GEOMETRIES, CHIP SIZE, BOND PAD SIZE

1

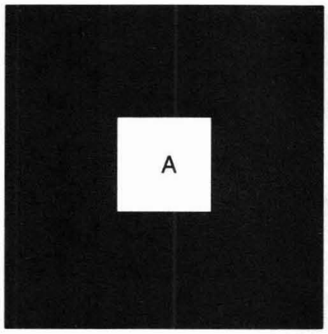

Chip Size: 15 x 15 mils/0.4 x 0.4 mm
Bond Pad Size:
Anode — 4 x 4 mils/0.1 x 0.1 mm
Cathode — 15 x 15 mils/0.4 x 0.4 mm

2

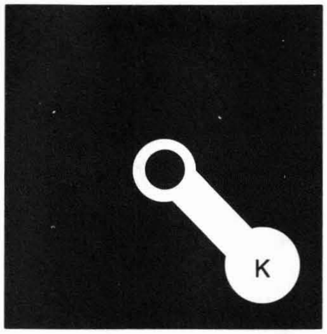

Chip Size: 24 x 24 mils/0.6 x 0.6 mm
Bond Pad Size:
Anode — 24 x 24 mils/0.6 x 0.6 mm
Cathode — 3.5 mils dia./0.09 mm dia.

3

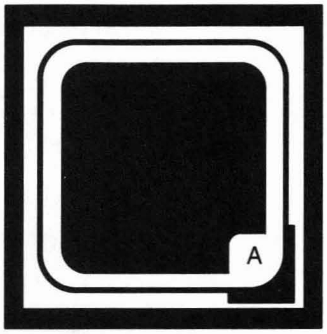

Chip Size: 30 x 30 mils/0.76 x 0.76 mm
Bond Pad Size:
Anode — 4.5 x 4.5 mils/0.11 x 0.11 mm
Cathode — 30 x 30 mils/0.76 x 0.76 mm

4

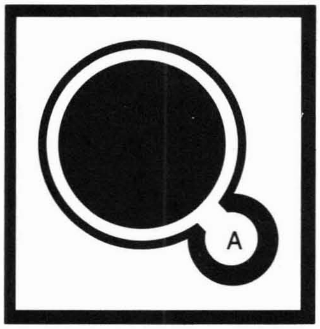

Chip Size: 30 x 30 mils/0.76 x 0.76 mm
Bond Pad Size:
Anode — 4.0 mils dia./0.1 mm dia.
Cathode — 30 x 30 mils/0.76 x 0.76 mm

5

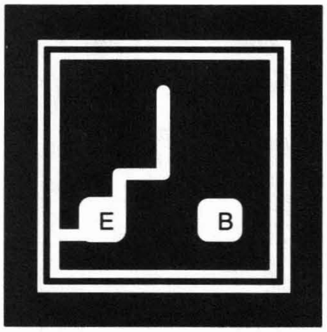

Chip Size: 25 x 25 mils/0.64 x 0.64 mm
Bond Pad Size:
Emitter — 3.5 x 3.5 mils/0.09 x 0.09 mm
Base — 3.5 x 3.5 mils/0.09 x 0.09 mm

6

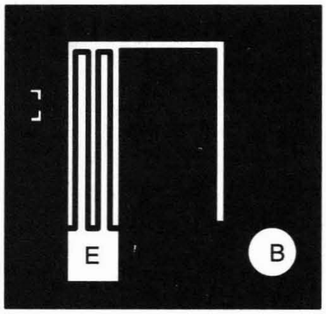

Chip Size: 27 x 27 mils/0.69 x 0.69 mm
Bond Pad Size:
Emitter — 4.0 x 4.0 mils/0.1 x 0.1 mm
Base — 4.0 mils dia./0.1 mm dia.

7

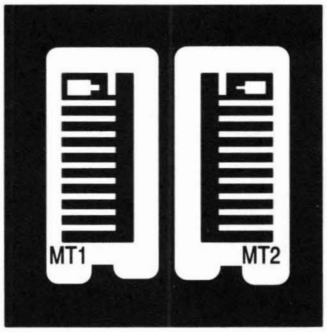

Chip Size: 40 x 40 mils/1.0 x 1.0 mm
Bond Pad Size:
MT1 — 4.0 x 5.0 mils/0.1 x 0.13 mm
MT2 — 4.0 x 5.0 mils/0.1 x 0.13 mm

8

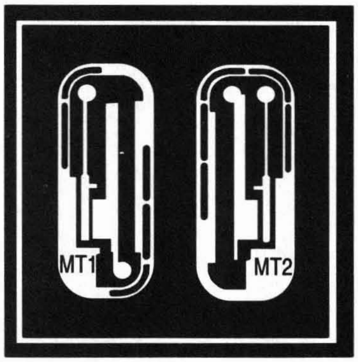

Chip Size: 45 x 45 mils/1.14 x 1.14 mm
Bond Pad Size:
MT1 — 4.6 mils dia./0.12 mm dia.
MT2 — 4.6 mils dia./0.12 mm dia.

A = Anode
B = Base
C = Collector
E = Emitter
G = Gate
K = Cathode

Sensors

In Brief . . .

Page

Pressure Sensors 5.7-2

Temperature Sensors 5.7-9

Pressure Sensors

The marriage of integrated circuit technology with the most advanced pressure sensor architecture now offers an unrivaled combination of performance, reliability and design adaptability in a single monolithic pressure sensing element — the Motorola MPX series of pressure transducers. Available in three versions:

Fully signal conditioned for high-level output
(single chip device designed to compete with modules);
Compensated and calibrated, for simplified circuit design;
Uncompensated for unlimited adaptability

This series of sensors provides both electrical and mechanical design-in options that uniquely fit the varying requirements of the system designer.

Temperature Sensors

The sensitivity of a semiconductor junction to variation in temperature is utilized in a series of temperature-calibrated transistors that provide high temperature accuracy (±2% over a temperature range from −40° to +150°C at low cost).

Typical Electrical Characteristic Curves

Output Voltage versus Pressure

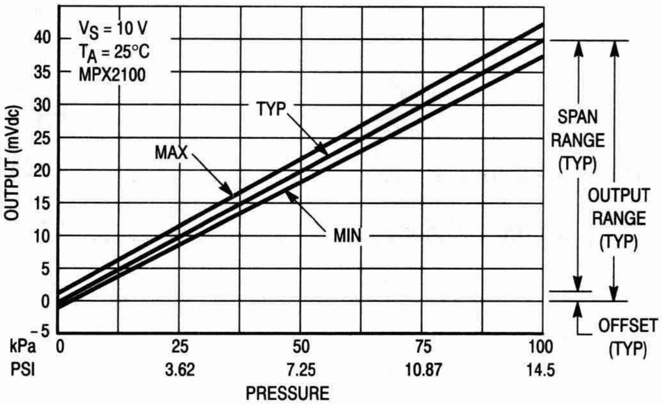

Figure 1. Compensated MPX2100

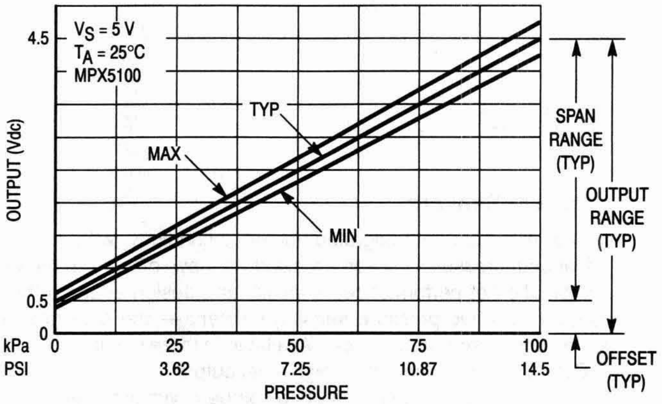

Figure 2. Signal Conditioned MPX5100

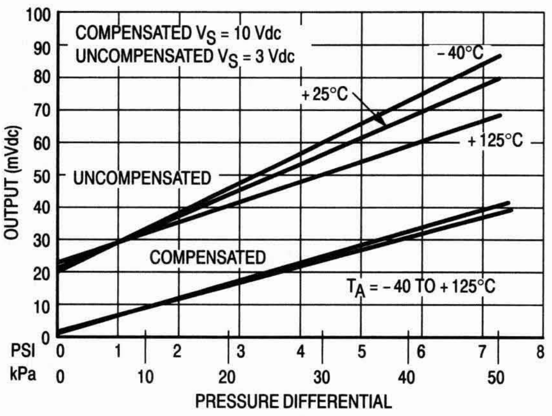

Figure 3. Typical-Output Voltage versus Pressure and Temperature for Compensated and Uncompensated Devices

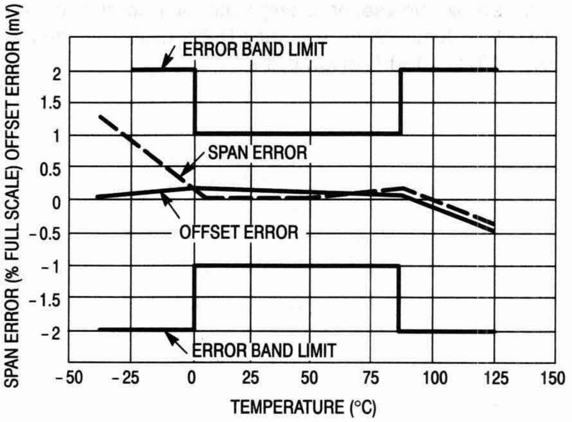

Figure 4. Temperature Error Band Limit and Typical Span and Offset Errors — Compensated Devices

LINEARITY

Linearity refers to how well a transducer's output follows the equation: $V_{out} = V_{off}$ + sensitivity x P over the operating pressure range. There are two basic methods for calculating nonlinearity: (1) end point straight line fit (see Figure 2) or (2) a least squares best line fit. While a least squares fit gives the "best case" linearity error (lower numerical value), the calculations required are burdensome.

Conversely, an end point fit will give the "worst case" error (often more desirable in error budget calculations) and the calculations are more straightforward for the user. Motorola's specified pressure sensor linearities are based on the end point straight line method measured at the midrange pressure.

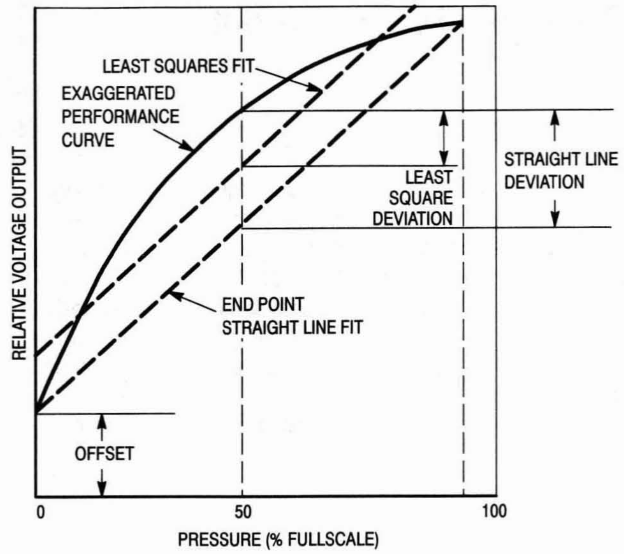

Figure 5. Linearity Specification Comparison

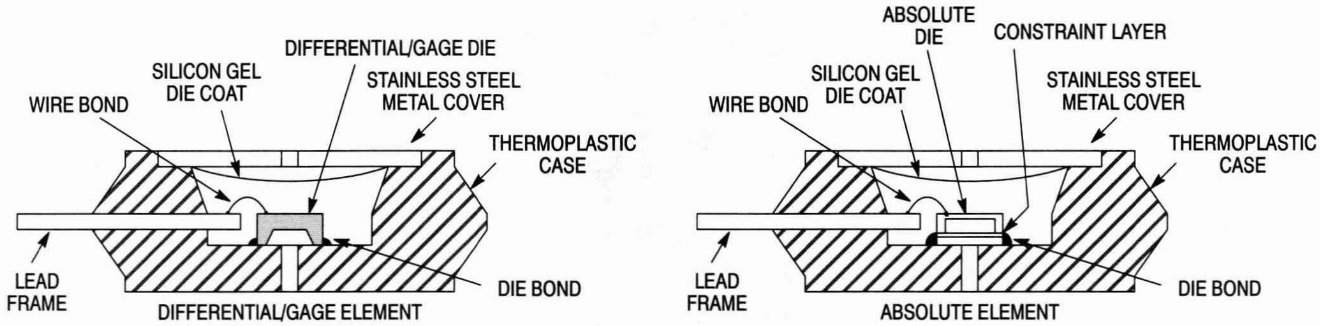

Figure 6. MPX Pressure Sensor Element Cross Sections (Not to Scale)

Figure 3 shows a cross section of the chip carrier element containing the pressure sensor die. A silicon gel isolates the die surface and wire bonds from harsh environments, while allowing the pressure signal to be transmitted to the silicon diaphragm. In lieu of the traditional wheatstone bridge configuration employing four resistive strain gages, Motorola uses a single piezoresistive implant to sense sheer stress. MPX devices are compatible with most non-corrosive gases. Media must generally be compatible with silicon gel, RTV, and valox plastic. For compatibility in a specific application, please contact product marketing at 1-800-752-3621.

MOTOROLA'S PATENTED X-DUCER

Excitation current is passed longitudinally through the resistor (taps 1 and 3), and the pressure that stresses the diaphragm is applied at a right angle to the current flow. The stress establishes a transverse electric field in the resistor that is sensed as voltage at taps 2 and 4, which are located at the midpoint of the resistor. The single-element transverse voltage strain gauge can be viewed as the mechanical analog of a Hall effect device.

Using a single element eliminates the need to closely match the four stress and temperature sensitive resistors that form a Wheatstone bridge design. At the same time, it greatly simplifies the additional circuitry necessary to accomplish calibration and temperature compensation. The offset does not depend on matched resistors but instead on how well the transverse voltage taps are aligned. This alignment is accomplished in a single photolithographic step, making it easy to control, and is only a positive voltage, simplifying schemes to zero the offset.

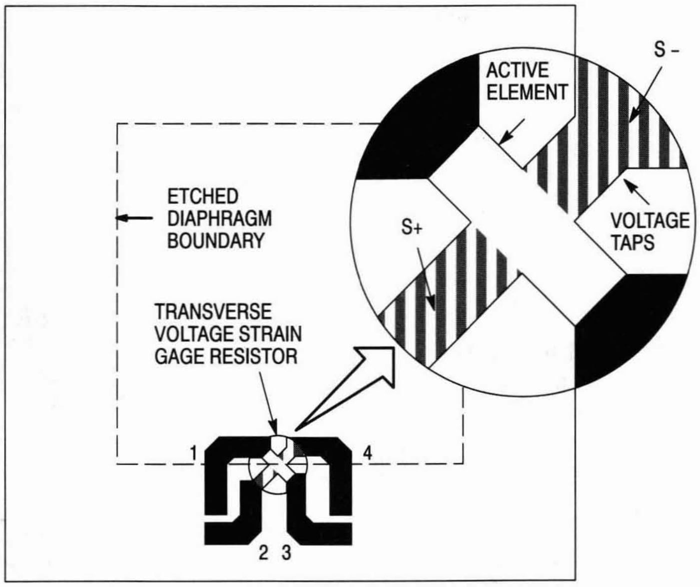

Figure 7. Motorola's Patented X-Ducer

Pressure/Vacuum Side Identification Table

Motorola designates the two sides of the pressure sensor as the Pressure (top) side and the Vacuum (back) side. The Pressure side is the side containing silicon gel which protects the die from harsh media. The Motorola MPX pressure sensor is designed to operate with positive differential pressure applied (i.e., top side pressure is greater than or equal to back side pressure).

The Pressure side may be identified by using the table below:

Table 1 — Pressure/Vacuum Side Identification

Part Number	Case Type 4 Pin/6 Pin	Pressure Side Identifier
MPX____D	344-08/867-04	Stainless Steel Cap
MPX____DP	352-02/867C-03	Side with Part Marking
MPX____GP	350-03/867B-03	Side with Port Attached
MPX____GVP	350-04/867D-03	Stainless Steel Cap
MPX____GS	371-06/867E-02	Side with Port Attached
MPX____GVS	371-05/867A-03	Stainless Steel Cap
MPX____GSX	371C-02/867F-02	Side with Port Attached
MPX____GVSX	371D-02/867G-02	Stainless Steel Cap

Ordering Information . . .

Table 2 — MPX10/50/100/200/700 Series (Uncompensated)

Device Type	Measurement Options	Package Options	Pressure Range				
			0-1.5 PSI	0-7.3 PSI	0-15 PSI	0-30 PSI	0-100 PSI
4-Pin Basic Element	Absolute	Case 344-08	—	—	MPX100A	MPX200A	—
	Differential	Case 344-08	MPX10D	MPX50D	MPX100D	MPX200D	***MPX700D***
Ported Element	Absolute Port	Case 350-03	—	—	MPX100AP	MPX200AP	—
	Absolute Stovepipe	Case 371-05	—	—	MPX100AS	MPX200AS	—
	Absolute Axial	Case 371C-02	—	—	MPX100ASX	MPX200ASX	—
	Differential Port	Case 352-02	MPX10DP	MPX50DP	MPX100DP	MPX200DP	***MPX700DP***
	Gage	Case 350-03	MPX10GP	MPX50GP	MPX100GP	MPX200GP	***MPX700GP***
	Gage Vacuum	Case 350-04	MPX10GVP	MPX50GVP	MPX100GVP	MPX200GVP	***MPX700GVP***
	Gage Stovepipe	Case 371-05	MPX10GS	MPX50GS	MPX100GS	MPX200GS	***MPX700GS***
	Gage Vacuum Stovepipe	Case 371-06	MPX10GVS	MPX50GVS	MPX100GVS	MPX200GVS	***MPX700GVS***
	Gage Axial	Case 371C-02	MPX10GSX	MPX50GSX	MPX100GSX	MPX200GSX	***MPX700GSX***
	Gage Vacuum Axial	Case 371D-02	MPX10GVSX	MPX50GVSX	MPX100GVSX	MPX200GVSX	***MPX700GVSX***

Table 3 — MPX2000 Series (Temperature Compensated and Calibrated On-Chip)

Device Type	Measurement Options	Package Options	Pressure Range			
			0-1.5 PSI	0-7.3 PSI	0-15 PSI	0-30 PSI
4-Pin Basic Element	Absolute	Case 344-08	—	—	***MPX2100A***	***MPX2200A***
	Differential	Case 344-08	***MPX2010D***	***MPX2050D***	***MPX2100D***	***MPX2200D***
Ported Element	Absolute Port	Case 350-03	—	—	***MPX2100AP***	***MPX2200AP***
	Absolute Stovepipe	Case 371-05	—	—	***MPX2100AS***	***MPX2200AS***
	Absolute Axial	Case 371C-02	—	—	***MPX2100ASX***	***MPX2200ASX***
	Differential Port	Case 352-02	***MPX2010DP***	***MPX2050DP***	***MPX2100DP***	***MPX2200DP***
	Gage	Case 350-03	***MPX2010GP***	***MPX2050GP***	***MPX2100GP***	***MPX2200GP***
	Gage Vacuum	Case 350-04	***MPX2010GVP***	***MPX2050GVP***	***MPX2100GVP***	***MPX2200GVP***
	Gage Stovepipe	Case 371-05	***MPX2010GS***	***MPX2050GS***	***MPX2100GS***	***MPX2200GS***
	Gage Vacuum Stovepipe	Case 371-06	***MPX2010GVS***	***MPX2050GVS***	***MPX2100GVS***	***MPX2200GVS***
	Gage Axial	Case 371C-02	***MPX2010GSX***	***MPX2050GSX***	***MPX2100GSX***	***MPX2200GSX***
	Gage Vacuum Axial	Case 371D-02	***MPX2010GVSX***	***MPX2050GVSX***	***MPX2100GVSX***	***MPX2200GVSX***

Table 4 — MPX5000 Series (Signal Conditioned On-Chip)

Device Type	Measurement Options	Package Options	Pressure Range
			0-15 PSI
6-Pin Basic Element	Absolute	Case 867-04	***MPX5100A***
	Differential	Case 867-04	***MPX5100D***
Ported Element	Absolute Port	Case 867B-03	***MPX5100AP***
	Absolute Stovepipe	Case 867E-02	***MPX5100AS***
	Absolute Axial	Case 867F-02	***MPX5100ASX***
	Differential Port	Case 867C-03	***MPX5100DP***
	Gage	Case 867B-03	***MPX5100GP***
	Gage Vacuum	Case 867D-03	***MPX5100GVP***
	Gage Stovepipe	Case 867E-02	***MPX5100GS***
	Gage Vacuum Stovepipe	Case 867A-03	***MPX5100GVS***
	Gage Axial	Case 867F-02	***MPX5100GSX***
	Gage Vacuum Axial	Case 867G-02	***MPX5100GVSX***

Devices listed in bold, italic are Motorola preferred devices.

Pressure Sensors (continued)

4-PIN

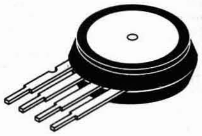

CASE 344-08
Basic element

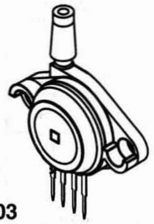

CASE 350-03
Sensing element with positive pressure side ported — for absolute and gage measurements

CASE 350-04
Sensing element with vacuum side ported — for vacuum measurement

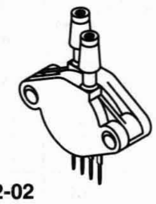

CASE 352-02
Sensing element with both sides ported — for differential measurement

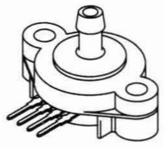

CASE 371C-02
Sensing element with Axial port on positive pressure side — for positive pressure measurement

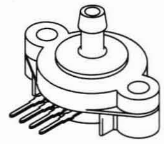

CASE 371D-02
Sensing element with Axial port on vacuum side — for vacuum measurement

6-PIN

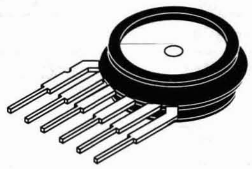

CASE 867-04
Basic element

CASE 867D-03
Sensing element with vacuum side ported — for vacuum measurement

CASE 867A-03
Sensing element with stovepipe port on vacuum side — for vacuum measurement

CASE 867E-02
Sensing element with stovepipe port on positive pressure side — for gage/absolute pressure measurement

CASE 867B-03
Sensing element with positive pressure side ported — for absolute and gage measurements

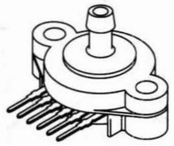

CASE 867F-02
Sensing element with Axial port on positive pressure side — for positive pressure measurement

CASE 867C-03
Sensing element with both sides ported — for differential measurement

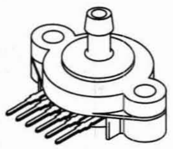

CASE 867G-02
Sensing element with Axial port on vacuum side — for vacuum measurement

Motorola pressure sensors combine advanced piezoresistive sensor architecture with integrated circuit technology to offer a wide range of pressure sensing devices for automotive, biomedical, consumer and industrial applications. Selection versatility includes choice of:

Pressure Ranges in PSI:
0 to 1.5, 0 to 7.3, 0 to 15, 0 to 30, 0 to 100

Application Measurements:
Absolute, Differential, Gage

Sensing Options:
Uncompensated, Temperature Compensated/Calibrated, Signal Conditioned (with on-chip amplifiers)

Package Options:
Basic Element, Ported Elements for specific measurements

Direct to the Factory, Technical Assistance
Sensor Hotline 1-800-752-3621

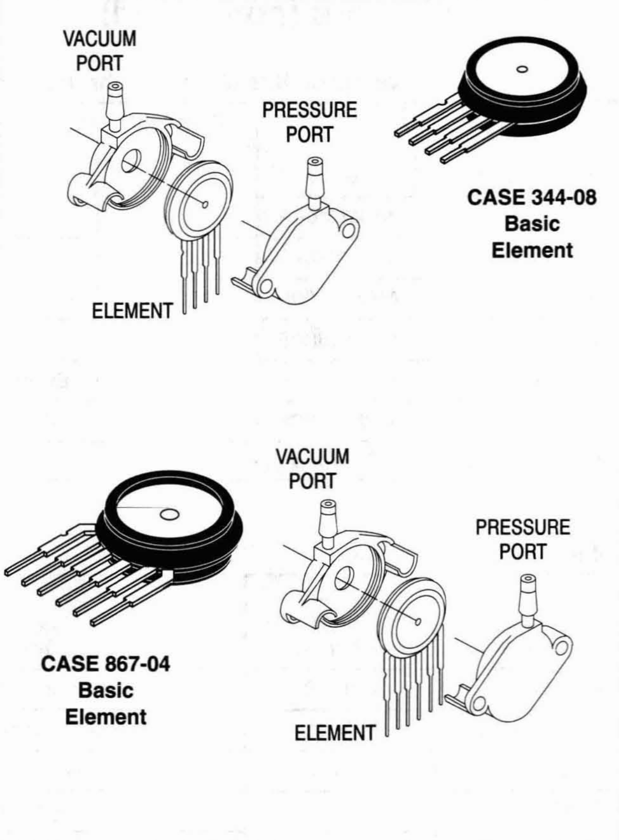

Electrical Characteristics

Table 5 — Basic: V_S = 3 Vdc, T_A = 25°C

Device Series	Pressure Range kPa/psi	Over Pressure (kPa)	Offset mV (Typ)	Full Scale Span mV (Typ)	Sensitivity (mV/kPa)	Linearity % of FSS[1] (Typ)	Temperature Coefficient of Span %/°C (Typ)	Input Impedance Ohms (Typ)
MPX10D	10/1.5	100	20	35	3.5	±1 (max)	−0.19	475
MPX11D	10/1.5	100	20	50	5	−0.5, +3 (max)	−0.19	475
MPX12D	10/1.5	100	20	55	5.5	0, +5 (max)	−0.19	475
MPX50D	50/7.3	200	20	60	1.2	±0.05	−0.19	475
MPX51D	50/7.3	200	20	45	0.9	±0.05	−0.19	475
MPX52D	50/7.3	200	20	60	1.2	±0.3	−0.19	475
MPX100D,A	100/15	200	20	60	0.6	±0.05	−0.19	475
MPX200D,A	200/30	400	20	60	0.3	±0.05	−0.19	475
MPX201D,A	200/30	400	20	60	0.3	±0.1	−0.19	475
MPX700D	700/100	2100	20	60	0.086	0.5	−0.18	475

Table 6 — Compensated and Calibrated (On-Chip): V_S = 10 Vdc, T_A = 25°C **% FSS**

MPX2010D	10/1.5	75	±0.05	25	2.5	±0.15	±0.5	1800
MPX2040D	40/6	125	5 (mmHg)	—	5 (μV/V/mmHg)	±0.15	±0.02 (μV/V/mmHg)	2500
MPX2050D	50/7.3	200	±0.05	40	0.8	±0.1	±0.5	1800
MPX2051D	50/7.3	200	±0.1	40	0.8	±0.1	±0.5	1800
MPX2100D,A	100/15	400	±0.05	40	0.4	±0.1	±0.5	1800
MPX2101D,A	100/15	400	±0.1	40	0.4	±0.1	±0.5	1800
MPX2200D,A	200/30	400	±0.05	40	0.2	±0.1	±0.5	1800
MPX2201D,A	200/30	400	±0.1	40	0.2	±0.1	±0.5	1800

Table 7 — Signal Conditioned (On-Chip): V_S = 5 Vdc, T_A = 25°C

MPX5100D,A	100/15	700	0.5 V	4 V	40	±0.2	±1	—

(1)Based on end point straight line fit method. Best fit straight line linearity error is approximately 1/2 of listed value.

Devices listed in bold, italic are Motorola preferred devices.

Pressure Sensors (continued)

Table 8 — Sample/Evaluation Kits (Available through Motorola Literature Distribution Center 1-800-441-2447)

Order Number	Device	Pressure Range kPa/psi	Description	Intro	Case #	Cost
KITK29/D	***MPX2010DP***	10/1.5	Device w/Literature	NOW	352-02	FREE
KITK32/D	***MPX700DP***	700/100	Device w/Literature	NOW	352-02	FREE
KITMPX5100D/D	***MPX5100DP***	100/15	Device w/Literature	NOW	867C-03	$25.00
KITMPX5100A/D	***MPX5100AP***	100/15	Device w/Literature	NOW	867B-03	$25.00
SEK-1KIT/D	SEK-1	100/15	Evaluation Board for MPX2000 Series	NOW	—	$10.00
KITDEVB114/D	***MPX5100D***	100/15	Pressure Sensor w/Microprocessor	NOW	—	$95.00
KITDEVB129/D	***MPX5100D***	100/15	Bar Graph Pressure Gage	NOW	—	$50.00

Table 9 — Future Products

Device	Pressure Range kPa/psi	Description	Intro	Prod	Case #
MPX700A	700/100	Uncompensated	Q2'92	Q3'92	344-08
MPX2700D,A	700/100	Temperature Compensated & Calibrated	Q2'92	Q3'92	344-08
MPX5050D	50/7.3	Signal Conditioned	Q1'92	Q1'92	867-04
MPX7100D,A	100/15	High Impedance	Q1'92	Q2'92	344-08
MPX7200D,A	200/30	High Impedance	Q1'92	Q2'92	344-08

Table 10 — Future Sample/Evaluation Kits

Order Number	Device	Pressure Range kPa/psi	Description	Case #	Cost
*KITMPX700A/D	MPX700AP	700/100	Device w/Literature	344-08	—
*KITMPX2700D/D	MPX2700DP	700/100	Device w/Literature	344-08	—
*KITMPX2700A/D	MPX2700AP	700/100	Device w/Literature	344-08	—
*KITMPX5050D/D	***MPX5050DP***	50/7.3	Device w/Literature	867-04	—
*KITMPX7100A/D	MPX7100AP	100/15	Device w/Literature	344-08	—
*KITMPX7100D/D	MPX7100DP	100/15	Device w/Literature	344-08	—
*KITMPX7200A/D	MPX7200AP	200/30	Device w/Literature	344-08	—
*KITMPX7200D/D	MPX7200DP	200/30	Device w/Literature	344-08	—
*KITDEVB104/D	***MPX5100D***	100/15	Pressure Regulator Board	—	$75.00
*KITDEVB126/D	MPX7100D	100/15	4-20 mAmp Demo Board	—	$75.00

*These kits will be available pending device internal qualification.

Devices listed in bold, italic are Motorola preferred devices.

Silicon Temperature Sensors

Available in a standard (TO-92) plastic package, these temperature sensing transistor elements are suitable for applications in automotive, consumer and industrial products requiring low cost and high accuracy.

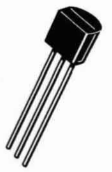

CASE 29-04
(TO-92)

Table 11 — Silicon Temperature Sensors

Device	V_{BE} @ I_C = 0.1 mA, T_A = 25°C Typ	Temperature Over −40°C to 150°C	Thermal Time Constant		Case
			Liquid-to-Liquid	Flowing Alt	
MTS102	595 mV	±2°C	3 s	8 s	29-04
MTS103		±3°C			
MTS105		±5°C			

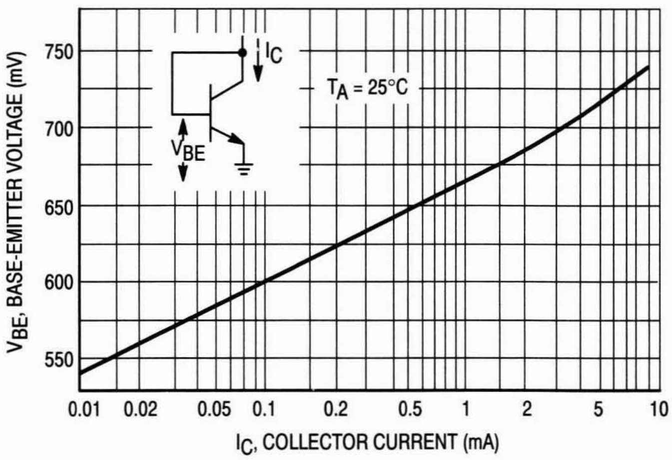

Figure 8. Base-Emitter Voltage versus Collector-Emitter Current

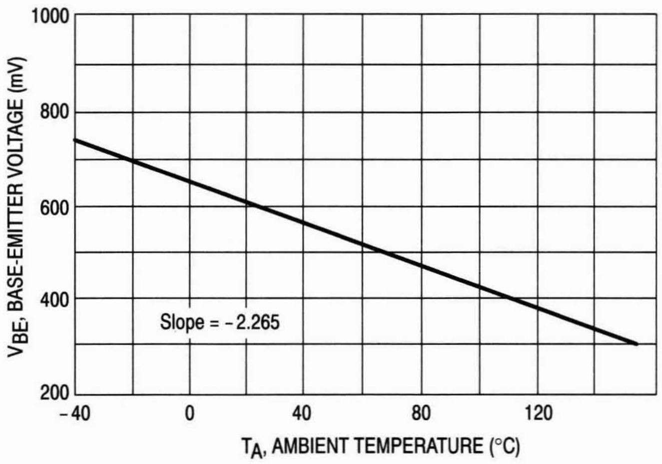

Figure 9. Base-Emitter Voltage versus Ambient Temperature

RF Products

In Brief . . .

While Motorola is considered to be the supermarket for semiconductor products, there is not a category in which the selection is more diverse, or more complete, than in products designed for RF system applications. From MOS and bipolar power and signal transistors to tuning and switching diodes, Motorola's RF components cover the entire spectrum from HF to microwave. Yet, product expansion continues — not only to keep pace with the progressive needs of the industry, but to better serve the needs of designers for a reliable and comprehensive source of supply.

Motorola has taken three major steps to continue leading the industry in supplying RF products. The first step taken was the acquisition of the RF Devices Division of TRW which occurred in 1988; the second step was the creation of an RF Integrated Circuits group within the RF Products Division which occurred in late 1990; and the third step was the recent investment of a major GaAs fabrication facility which was announced in 1991.

Acquiring the RF products of TRW has expanded Motorola's portfolio particularly in the area of high power linear transistors and microwave devices. These products can be found in the current listing of Motorola RF devices. The acquisition, which included a major design and manufacturing facility in France, has positioned Motorola for increased participation in the European market and particularly for significant participation in the greater European common market that is being established in 1992.

The creation of an integrated circuits group dedicated exclusively to RFICs emphasizes the importance that Motorola places on these devices for future needs in RF, particularly the trends to higher frequency, lower power RF commercial applications. And GaAs products — both discrete and IC — will play an increasing role in this market place of the future. The current list of RF products does not reflect the RFIC and GaAs products that are in various stages of development. For a detailed description of these products, consult your Motorola sales representative or distributor.

	Page
Power Transistors	
Field Effect (TMOS)	5.8-3
Bipolar	5.8-5
Small-Signal Transistors	
Selection by Package	5.8-20
Low Noise	5.8-25
CATV, MATV and Class A Linear	5.8-26
CRT Drivers	5.8-27
High-Speed Switches	5.8-28
UHF and Microwave Oscillators	5.8-28
Complementary Devices	5.8-28
RF Amplifiers	
High Power	
Land Mobile/Portable	5.8-31
Base Station	5.8-33
TV Transmitters	
PAM Series — Ultra Linear	5.8-34
PAA Series — Integrated Assemblies	5.8-35
Low Power	
CATV Distribution	5.8-36
General Purpose Wideband	5.8-38
SHP and DHP Linear	5.8-41
CRT Drivers	5.8-42
Carrier Band Module	5.8-42
RF Chips	
Ordering and Shipping Information	5.8-43
Die Geometries	5.8-44
Parts List of Available Die	5.8-45
Storage and Handling Information	5.8-45

RF Discrete Transistors

In the following pages, the reader will find the most extensive group of RF Discrete Transistors offered by any semiconductor manufacturer anywhere in the world today.

From Bipolar to FET, from Low Power to High Power, the user can choose from a variety of packages. They include plastic, metal can and ceramic that are microstrip circuit compatible or surface mountable. Many are designed for automated assembly equipment.

Major sub-headings are TMOS FETs, Power Bipolar and Small Signal Bipolar.

CASE 26-03
STYLE 1
(TO-206AB)

CASE 36-03
STYLE 1

CASE 79-04
STYLES 1, 5
(TO-205AD)

CASE 79-05
STYLES 5, 7
(TO-39 CE)

CASE 144B-05
STYLE 1
(.380″ STUD)

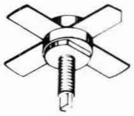
CASE 145A-09
STYLE 1
(.380″ STUD)

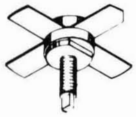
CASE 145A-10
STYLE 1
(.500″ STUD)

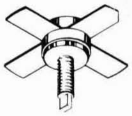
CASE 145D-01
STYLE 1

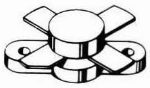
CASE 211-07
STYLES 1, 2
(.380″ FLANGE)

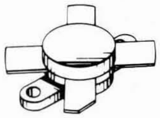
CASE 211-11
STYLES 1, 2
(.500″ FLANGE)

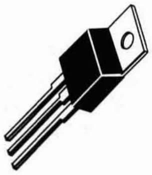
CASE 221A-04
STYLES 1, 2
(TO-220AB)

CASE 244-04
STYLES 1, 3, 4
(.280″ STUD)

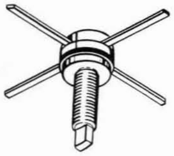
CASE 244A-01
STYLE 1

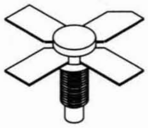
CASE 244C-02
STYLE 1

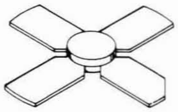
CASE 249-05
STYLE 1
(.280″ PILL)

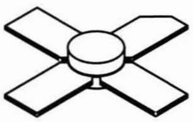
CASE 249A-02
STYLE 1

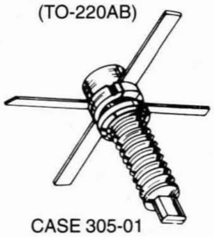
CASE 305-01
STYLE 1
(.204″ STUD)

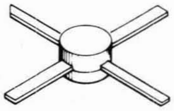
CASE 305A-01
STYLE 1
(.204″ PILL)

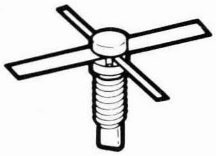
CASE 305B-01
STYLE 1

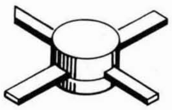
CASE 305D-01
STYLE 1

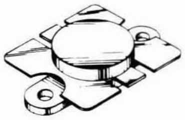
CASE 316-01
STYLE 1
(.500″ CQ)

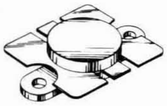
CASE 316A-01
STYLE 1

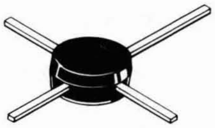
CASE 317-01
STYLE 2
(MACRO-X)

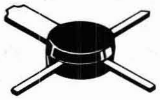
CASE 317D-02
STYLE 2

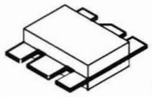
CASE 319A-02
STYLE 2

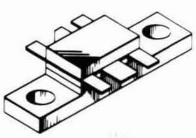
CASE 319-06
STYLES 1, 2, 3
(CS-12)

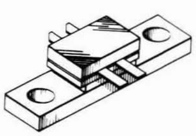
CASE 319B-01
STYLE 1

CASE 328E-01
STYLE 2

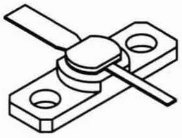
CASE 328F-01
STYLES 1, 2, 3

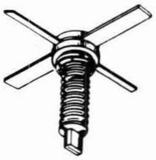
CASE 332-04
STYLES 1, 2
(.380″ STUD)

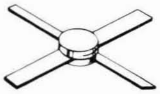
CASE 332A-03
STYLES 1, 2
(.280″ PILL)

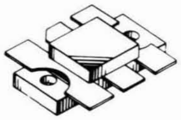
CASE 333-04
STYLE 1

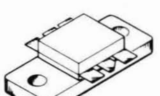
CASE 333A-02
STYLE 1
(MAAC PAC)

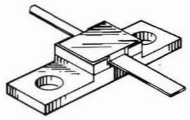
CASE 336E-02
STYLE 1

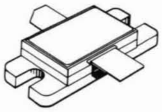
CASE 355C-01
STYLE 1

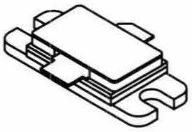
CASE 355D-02
STYLE 1

CASE 355E-01
STYLE 1

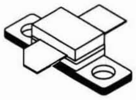
CASE 360A-01
STYLE 1

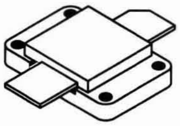
CASE 368-02
STYLES 1, 2
(HOG PAC)

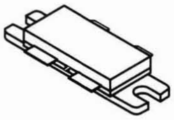
CASE 375-03
STYLE 2

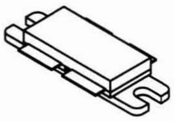
CASE 375A-01
STYLE 1

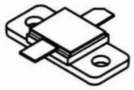
CASE 376B-02
STYLE 1

CASE 376C-01
STYLE 1

CASE 382-01
STYLE 1

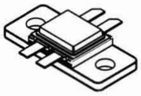
CASE 391-02
STYLE 1

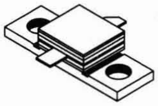
CASE 393-02
STYLE 1

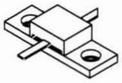
CASE 394-02
STYLE 1

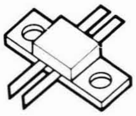
CASE 395-01
STYLE 1

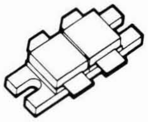
CASE 397-01
STYLE 1

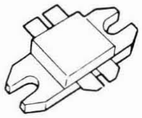
CASE 398-01/1

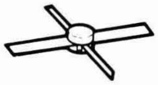
CASE 400-01
STYLE 1

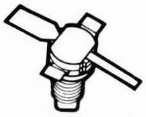
CASE 401-01
STYLE 1

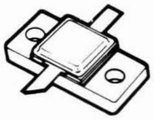
CASE 402-01
STYLE 1

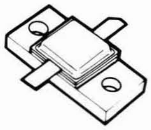
CASE 402A-01
STYLE 1

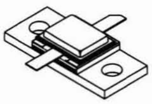
CASE 402B-01
STYLE 1

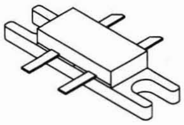
CASE 412-01
STYLE 1

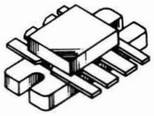
CASE 744A-01
STYLE 1

CASE 751-03
STYLE 1
(SO-8)

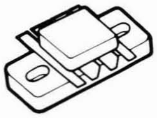
CASE 827-01
STYLE 1

RF Power TMOS® FETs

Motorola RF Power MOSFETs are constructed using planar process to enhance manufacturing repeatability. *They are N-channel field effect transistors* with an oxide insulated gate which controls vertical current flow.

Compared with bipolar transistors, RF Power FETs exhibit higher gain, higher input impedance, enhanced thermal stability and lower noise. The FETs listed in this section are specified for operation in RF Power Amplifiers and are grouped by frequency range of operation and type of application. Arrangement within each group is by order of first voltage then increasing output power.

To 150 MHz HF/SSB

For military and commercial HF/SSB fixed, mobile, and marine transmitters.

Device	P_{out} Output Power Watts	P_{in} Input Power Typical Watts	G_{ps} Typical Gain dB @ 30 MHz	Typical IMD		θ_{JC} °C/W	Package/Style
				d_3 dB	d_{11} dB		
V_{DD} = 28 Volts							
MRF138	30	0.6	17	−30	−60	1.5	211-07/2
MRF140	150	4.7	15	−30	−60	0.6	211-11/2
V_{DD} = 50 Volts							
MRF148	30	0.5	18	−35	−60	1.5	211-07/2
MRF150	150	2.9	17	−32	−60	0.6	211-11/2
MRF154	600	12	17	−25	—	0.13	368-02/2
MRF157(1)	600	6	20	−25	—	0.13	368-02/2

(1) To be introduced

(continued)

Devices listed in bold, italic are Motorola preferred devices.

RF Power TMOS FETs (continued)

To 225 MHz VHF AM/FM

For VHF military and commercial aircraft radio transmitters.

Device	P_{out} Output Power Watts	P_{in} Input Power Typical Watts	G_{ps} (Typ)/Freq. dB/MHz	η Typical Efficiency %	$θ_{JC}$ °C/W	Package/Style
V_{DD} = 28 Volts						
MRF134	5	0.2	14/150	55	10	211-07/2
MRF136	15	0.38	16/150	60	3.2	211-07/2
MRF136Y	30	1.2	14/150	54	1.8	319B-01/1
MRF137	30	0.75	16/150	60	1.8	211-07/2
MRF171	45	1.4	15/150	60	1.5	211-07/2
MRF172	80	4.7	12.3/150	60	0.8	211-11/2
MRF173(1)	80	4	13/150	65	0.8	211-11/2
MRF173CQ(1)	80	4	13/150	65	0.8	316-01/2
MRF175LV	100	4	14/225	65	0.65	333-04/1
MRF174	125	8.3	11.8/150	60	0.65	211-11/2
MRF141	150	10	10/175	55	0.6	211-11/2
MRF175GV	200	8	14/225	65	0.44	375-03/2
MRF141G	300	13	10/175	55	0.35	375-03/2
V_{DD} = 50 Volts						
MRF151	150	7.5	13/175	45	0.6	211-11/2
MRF176GV	200	4	17/225	55	0.44	375-03/2
MRF151G	300	7.5	16/175	55	0.35	375-03/2

To 500 MHz UHF AM/FM

For VHF/UHF military and commercial aircraft radio transmitters.

Device	P_{out} Output Power Watts	P_{in} Input Power Typical Watts	G_{ps} (Typ)/Freq. dB/MHz	η Typical Efficiency %	$θ_{JC}$ °C/W	Package/Style
V_{DD} = 28 Volts						
MRF158R(1)	2	0.02	20/400	55	22	79-05/7
MRF161	5	0.4	13.5/400	45	10	244-04/3
MRF162	15	0.65	13.6/400	50	3.5	244-04/3
MRF166C(1)	20	0.4	17/400	55	2.5	319-06/3
MRF164W(1)	20	0.4	17/400	50	1.5	412-01/1
MRF163	25	1.6	12/400	50	2	244-04/3
MRF175LU	100	10	10/400	55	0.65	333-04/1
MRF175GU	150	9.5	12/400	55	0.44	375-03/2
V_{DD} = 50 Volts						
MRF176GU	150	6	14/400	50	0.44	375-03/2

(1) To be introduced

Devices listed in bold, italic are Motorola preferred devices.

RF Power Bipolar Transistors

Motorola's broad line of bipolar RF power transistors are characterized for operation in RF power amplifiers. Typical applications are in military and commercial landmobile, avionics and marine radio transmitters. Groupings are by frequency band and type of application. Within each group, the arrangement of devices is by major supply voltage rating, then in the order of increasing output power. All devices are NPN polarity except where otherwise noted.

HF Transistors

1.5–30 MHz, HF/SSB

Designed for broadband operation, these devices feature specified Intermodulation Distortion at rated power output. Applications include mobile, marine, fixed station, and amateur HF/SSB equipment, operating from 12.5, 13.6, 28, or 50 volt supplies.

Device	P_{out} Output Power Watts	P_{in} Input Power Watts (Max)	G_{PE} (Min) Power Gain dB @ 30 MHz	θ_{JC} °C/W	Package/Style
V_{CC} = 12.5 or 13.6 Volts					
MRF476	3 PEP/CW	0.1	15	17.5	221A-04/1
MRF475	12 PEP/CW	1.2	10	10	221A-04/1
MRF433	12.5 PEP/CW	0.125	20	8.8	211-07/1
MRF406	20 PEP/CW	1.25	12	2.2	211-07/1
MRF477	40 PEP/CW	1.25	15	2	221A-04/2
MRF421	100 PEP/CW	10	10	0.6	211-11/1
V_{CC} = 28 Volts					
MRF410	10 PEP/CW	0.5	13	4.4	211-07/1
MRF485	15 PEP/CW	1.5	10	3.4	221A-04/1
MRF426	25 PEP/CW	0.16	22	2.5	211-07/1
MRF401	25 PEP/CW	1.25	13	3.5	145A-09/1
MRF466	40 PEP/CW	1.25	15	1	211-07/1
MRF486	40 PEP/CW	1.25	15	2	221A-04/2
MRF464	80 PEP/CW	2.53	15	0.7	211-11/1
MRF464A	80 PEP/CW	2.53	15	0.7	145A-10/1
MRF422	150 PEP/CW	15	10	0.6	211-11/1
V_{CC} = 50 Volts					
MRF427	25 PEP/CW	0.4	18	2.2	211-11/1
MRF428	150 PEP/CW	7.5	13	0.5	211-11/1
MRF429	150 PEP/CW	7.5	13	0.8	211-11/1
PT9790	150 PEP/CW	4.8	15 (3)	0.5	211-11/1
MRF448	250 PEP/CW	15.7	12	0.6	211-11/1
MRF430	600 PEP/CW	60	10	0.2	368-02/1

14–30 MHz, CB/AMATEUR BAND

These HF transistors are designed for economical, high-volume use in CW, AM and SSB applications.

V_{CC} = 12.5 or 13.6 Volts

MRF476	3	0.1	15	17.5	221A-04/1
MRF475	4	0.4	10	10	221A-04/1
MRF450	50	4	11	1.5	211-07/1
MRF450A	50	4	11	1.5	145A-09/1
MRF455	60	3	13	1	211-07/1
MRF455A	60	3	13	1	145A-09/1
MRF454	80	5	12	0.7	211-11/1

(3) Gain specified at 28 MHz

Devices listed in bold, italic are Motorola preferred devices.

RF Power Bipolar Transistors — HF Transistors (continued)

27–50 MHz, LOW-BAND FM BAND

For use in the FM "Low-Band," for Mobile communications.

Device	P_{out} Output Power Watts	P_{in} Input Power Watts (Max)	G_{PE} (Min) Power Gain dB @ 50 MHz	θ_{JC} °C/W	Package/Style
V_{CC} = 12.5 or 13.6 Volts					
MRF475	4	0.4	10	10	221A-04/1
MRF497	40	4	10	2	221A-04/2
MRF492	70	5.6	11	0.7	211-11/1

VHF Transistors

30–200 MHz BAND

Designed for Military Radio and Commercial Aircraft VHF bands, these 28-volt devices include the all-gold metallized MRF314/15/16/17 high-reliability series.

Device	P_{out} Output Power Watts	P_{in} Input Power Watts (Max)	G_{PE} (Min)/Freq. Power Gain dB/MHz	θ_{JC} °C/W	Package/Style
V_{CC} = 28 Volts					
2N3553	2.5	0.25	10/175	25	79-04/1
2N5641	7	1	8.4/175	11.6	144B-05/1
MRF340	8	0.4	13/136	11.6	221A-04/2
2N5642	20	3	8.2/175	5.9	145A-09/1
MRF342	24	1.9	11/136	3.2	221A-04/2
MRF314	30	3	10/150	2.2	211-07/1
MRF314A	30	3	10/150	2.2	145A-09/1
2N5643	40	6.9	7.6/175	2.9	145A-09/1
MRF315	45	5.7	9/150	1.6	211-07/1
MRF315A	45	5.7	9/150	1.6	145A-09/1
PT9733	50	10	7/175	2.1	145D-01/1
MRF344	60	15	6/136	2	221A-04/2
MRF316(4)	80	8	10/150	0.8	316-01/1
MRF317(4)	100	12.5	9/150	0.65	316-01/1
TP9386	150	15	10/175	0.7	316A-01/1

(4) Internal Impedance Matched

Devices listed in bold, italic are Motorola preferred devices.

66–88 MHz BAND

Power output chains up to 25 watts output are obtainable in the international VHF FM "Mid-Band" for which these transistors are optimized.

Device	P_{out} Output Power Watts	P_{in} Input Power Watts (Max)	G_{PE} (Min) Power Gain dB/MHz	θ_{JC} °C/W	Package/Style
V_{CC} = 12.5 Volts					
MRF229	1.5	0.15	10/90	35	79-05/5
MRF232	7.5	0.95	9/90	8.8	145A-09/1
MRF233	15	1.5	10/90	3.5	145A-09/1
MRF234	25	2.8	9.5/90	2.5	145A-09/1

88–108 MHz, FM BROADCAST BAND

These parts are designed for solid state transmitter applications in the FM broadcast band. They feature diffused ballast resistors and gold metallization that enhances long term reliability.

Device	P_{out} Output Power Watts	P_{in} Input Power Watts (Max)	G_{PE} (Min) Power Gain dB/MHz	θ_{JC} °C/W	Package/Style
V_{CC} = 28 Volts Bipolar					
TP9380	75	7	10.3/108	1.5	211-11/1
TP9383	150	18	9.2/108	0.75	211-11/1

136–174 MHz HIGH BAND

The "workhorse" VHF FM High-Band is served by Motorola with the broadest range of devices and package combinations in the industry.

Device	P_{out} Output Power Watts	P_{in} Input Power Watts (Max)	G_{PE} (Min) Power Gain dB @ 175 MHz	θ_{JC} °C/W	Package/Style
V_{CC} = 12.5 Volts					
2N4427	1	0.1	10	50	79-04/1
MRF604	1	0.1	10	91	26-03/1
MRF553	1.5	0.11	11.5	25	317D-02/2
MRF607	1.75	0.12	11.5	36	79-04/1
MRF220	4	0.25	12	14.6	211-07/1
MRF237	4	0.25	12	22	79-05/5
MRF260	5	0.5	10	14.6	221A-04/2
MRF212	10	1.25	9	4.7	145A-09/1

(continued)

Devices listed in bold, italic are Motorola preferred devices.

RF Power Bipolar Transistors — VHF Transistors (continued)

136–174 MHz, HIGH BAND (continued)

Device	P_{out} Output Power Watts	P_{in} Input Power Watts (Max)	G_{PE} (Min) Power Gain dB @ 175 MHz	θ_{JC} °C/W	Package/Style
V_{CC} = 12.5 Volts — continued					
MRF221	15	3.5	6.3	5.7	211-07/1
MRF262	15	3.5	6.3	4.7	221A-04/2
MRF2628	15	0.95	12	4	244-04/1
MRF264	30	9.1	5.2	2.4	221A-04/2
MRF1946	30	3	10	1.6	211-07/1
MRF1946A	30	3	10	1.8	145A-09/1
MRF224	40	14.3	4.5	2.2	211-07/1
MRF240	40	5	9	2.2	145A-09/1
MRF240A	40	5	9	2.2	211-07/1
MRF247(4)	75	15	7	0.7	316-01/1

225 MHz, ULTRA HIGH BAND

Specifically designed and characterized for the 225 MHz band, these devices eliminate the guesswork required when adapting 175 MHz characterized devices to this application.

Device	P_{out} Output Power Watts	P_{in} Input Power Watts (Max)	G_{PE} (Min) Power Gain dB @ 225 MHz	θ_{JC} °C/W	Package/Style
V_{CC} = 12.5 Volts					
MRF207	1	0.15	8.2	50	79-04/1
MRF227	3	0.13	13.5	21.8	79-05/5
MRF208	10	1	10	4.7	145A-09/1
MRF226	13	1.6	9	3.9	145A-09/1

(4) Internal Impedance Matched

Devices listed in bold, italic are Motorola preferred devices.

UHF Transistors

100–400 MHz BAND

Stringent requirements of the UHF Military band are met by MRF325, 326, 327, 329, 2N6439 and 2N6985 types, with all-gold metal systems, specified ruggedness and programmed wirebond construction, to assure consistent input impedances for internally matched parts. Hi-Rel versions of these transistors are available upon request.

Device	P_{out} Output Power Watts	P_{in} Input Power Watts	G_{PE} (Min) Power Gain dB @ 400 MHz	θ_{JC} °C/W	Package/Style
V_{CC} = 28 Volts					
TPM401	1	0.05	13	20	244C-02/1
2N3866	1	0.1	10	35	79-04/1
2N5160(5)	1	0.16	8	35	79-04/1
MRF5174	2	0.125	12	36	244-04/1
MRF5175	5	0.4	11	12	244-04/1
PT9701B	5	0.63	9	17.5	244C-02/1
TPM405	5	0.13	16	9.5	244C-02/1
PT9703B	10	1.52	8.2	8.8	244C-02/1
PT9702B	20	4	7	4.4	244C-02/1
TPM425	25	4	8	5	244C-02/1
PT9704B	30	6	7	2.5	244C-02/1
MRF325(4)	30	4.3	8.5	2.2	316-01/1
MRF326(4)	40	8	9	1.6	316-01/1
TPM4040(6)	40	4	10	2	827-01/1
JO2015A(4)	50	5	10	1.25	316A-01/1
2N6439(4)	60	10	7.8	1.2	316-01/1
MRF390(6)	60	6.8	7.5	1.3	744A-01/1
MRF327(4)	80	14.9	7.3	0.7	316-01/1
MRF329(4)	100	20	7	0.7	333-04/1
TPM4100(6)	100	17.8	7.5	0.85	827-01/1
MRF392(6)	125	19.8	8	0.7	744A-01/1
2N6985(6)	125	19.8	8	0.7	382-01/1
TPM4130(6)	130	24.8	7.2	0.85	827-01/1

100–500 MHz BAND

Similar to the 100–400 MHz transistors, these devices have bandwidth capabilities allowing their use to 500 MHz. All have nitride passivated die, gold metal systems, specified ruggedness and controlled wirebond construction to meet the stringent requirements of military space applications. Hi-Rel versions are available upon request.

Device	P_{out} Output Power Watts	P_{in} Input Power Watts	G_{PE} (Min)/Freq. Power Gain dB/MHz	θ_{JC} °C/W	Package/Style
V_{CC} = 28 Volts					
MRF313	1	0.03	15/400	28.5	305A-01/1
MRF321	10	0.62	12/400	6.4	244-04/1
MRF323	20	2	10/400	3.2	244-04/1
MRF393(6)	100	18	7.5/500	0.7	744A-01/1
2N6986(6)	100	18	7.5/500	0.7	382-01/1

(4) Internal Impedance Matched
(5) PNP
(6) Internal Impedance Matched Push-Pull Transistors

Devices listed in bold, italic are Motorola preferred devices.

RF Power Bipolar Transistors — UHF Transistors (continued)

500–1000 MHz BAND

Capable of operation in either class AB or C, the following device is designed for operation to 1 GHz. Gold metallized die, diffused emitter ballast resistors and a hermetic package make the MRA0510-50H suitable for industrial or military applications.

Device	P_{out} Output Power Watts	P_{in} Input Power Watts	G_{PE} (Min) Power Gain dB @ 1 GHz	θ_{JC} °C/W	Package/Style
V_{CC} = 28 Volts					
MRA0510-50H(6)	50	10	7	1.4	391-02/1

400–512 MHz BAND

Higher power output devices in this UHF power transistor series feature internally input-matched construction, are designed for broadband operation, and have guaranteed ruggedness under output mismatch and RF overdrive conditions. Devices are specified for handheld, mobile and base station operation.

Device	P_{out} Output Power Watts	P_{in} Input Power Watts	G_{PE} (Min)/Freq. Power Gain dB/MHz	θ_{JC} °C/W	Package/Style
V_{CC} = 7.5 Volts					
MRF750	0.5	0.05	10/470	29	305A-01/1
MRF752	2.5	0.4	8/470	12	249-05/1
MRF754	8	2	6/470	5	249-05/1
V_{CC} = 12.5 Volts					
MRF627	0.5	0.05	10/470	28.5	305A-01/1
MRF581(7)	0.6	0.03	13/500	40	317-01/2
MRF555	1.5	0.15	10/470	25	317D-02/2
MRF630	3	0.33	9.5/470	20	79-05/5
MRF652	5	0.5	10/512	7	244-04/1
MRF652S	5	0.5	10/512	7	249-05/1
MRF660	7	2	5.4/470	7	221A-04/2
MRF653	10	2	7/512	4	244-04/1
MRF653S	10	2	7/512	4	249-05/1
MRF641(4)	15	2.5	7.8/470	4	316-01/1
MRF654(4)	15	2.5	7.8/470	4	244-04/1
MRF644(4)	25	5.9	6.2/470	1.7	316-01/1
MRF646(4)	40	13.3	4.8/470	1.5	316-01/1
MRF650(4)	50	11.7	6.3/470	0.9	316-01/1
MRF648(4)	60	22	4.4/470	1	316-01/1
MRF658 ★	65	25	4.15/512	1	316-01/1

(4) Internal Impedance Matched
(6) Internal Impedance Matched Push-Pull Transistors
(7) Small signal gain. P_o is Typ.
★ New Product

Devices listed in bold, italic are Motorola preferred devices.

400–512 MHz BAND (continued)

Device	P_{out} Output Power Watts	P_{in} Input Power Watts	G_{PE} (Min)/Freq. Power Gain dB/MHz	θ_{JC} °C/W	Package/Style
V_{CC} = 24 Volts					
TP5002	1.5	0.075	13/470	21	244C-02/1
TP5002S	1.5	0.075	13/470	21	249A-02/1
TP5015	15	1.34	11/470	7	319-06/2
TP5025	25	3	9/470	4	319-06/2
TP5040	40	5	9/470	2	395-01/1
TP5060	50	11.2	6.5/470	0.7	827-01/1
V_{CC} = 28 Volts					
TP5050	50	11.2	6.5/470	1.5	316A-01/1
TP5060	60	13.4	6.5/470	0.7	827-01/1
MRF338	80	15	7.3/470	0.7	333-04/1

900 MHz Transistors

806–960 MHz BAND

Designed specifically for the 900 MHz mobile radio band, types MRF840 through 847 offer superior gain and ruggedness, using the unique CS-12 package, which minimizes common-element impedance, and thus maximizes gain and stability. Devices are listed for mobile and base station applications.

Device	P_{out} Output Power Watts	P_{in} Input Power Watts	G_{PE} (Min)/Freq. Power Gain dB/MHz	θ_{JC} °C/W	Package/Style
V_{CC} = 12.5 Volts — Class C (Except as Noted) — Si Bipolar					
MRF559(8)	0.5	0.08	8/870	50	317-01/2
MRF581(8)	0.6	0.06	10/870	40	317-01/2
MRF837(8)	0.75	0.11	8/870	40	317-01/1
MRF8372(8)	0.75	0.11	8/870	45	751-03/1
MRF838A(8)	1	0.22	6.5/870	70	305-01/1
MRF557(8)	1.5	0.23	8/870	25	317D-02/2
MRF839(8)	3	0.46	8/870	9	305A-01/1
MRF839F(8)	3	0.46	8/870	9	319-06/2
MRF841(15)	5	0.7	8.5/870	7	244-04/4
MRF840(4)(15)	10	2.5	6/870	3.1	319-06/1
MRF873(4)(8)	15	3	7/870	4	319-06/2
MRF873S(8)	15	3	7/870	4	319A-02/2
MRF842(4)(15)	20	5	6/870	1.5	319-06/1
MRF844(4)(15)	30	9	5.2/870	1.5	319-06/1
MRF846(4)(15)	40	15	4.3/870	1.2	319-06/1
MRF847(4)(15)	45	16	4.5/870	1	319-06/1

(4)Internal Impedance Matched
(8)Common Emitter Configuration
(15)Common Base Configuration

Devices listed in bold, italic are Motorola preferred devices.

RF Power Bipolar Transistors — 900 MHz Transistors (continued)

806–960 MHz BAND (continued)

Device	P_{out} Output Power Watts	Class	P_{in} Input Power Watts	Gp (Min)/Freq. Power Gain dB/MHz	θ_{JC} °C/W	Package/Style
V_{CC} = 24 Volts — Si Bipolar						
MRF890	2	C	0.25	9/900	25	305-01/1
TP3019	2	AB or A	0.25	9/960	14	305-01/1
TP3019S	2	AB or A	0.25	9/960	14	305A-01/1
MRF896 ★	3	AB or A	0.3	10/900	7	305D-01/1
MRF891 (4)	5	C	0.63	9/900	7	319-06/2
TP3021	10	AB or A	1	10/960	5	319-06/2
MRF892(4)	14	C	2	8.5/900	3.5	319-06/1
MRF894(4)	30	C	6	7/900	1.5	319-06/1
MRF897 ★	30	AB	3	10/900	—	395-01/1
MRF898 (4)	60	C	12	7/900	1	333A-04/1
MRF880 ★	90	AB	24	9/900	1.3	375A-01/1
MRF899 ★	150	AB	24	8/900	0.8	375A-01/1
V_{CC} = 26 Volts — Si Bipolar						
TP3020A	2.2	A	0.28	9/960	20	244C-02/1
TP3005	4	AB or A	0.57	8.5/960	7	319-06/2
TP3004	5	AB or A	0.63	9/900	7	319-06/2
TP3006★	5	AB	0.63	9/960	7	319-06/2
TP3022B	15	AB	2.12	8.5/960	6	319-06/2
TP3031	25	AB	4	8/960	2.5	319-06/2
TP3024B(6)	35.5	AB	6.35	7.5/960	3	395-01/1
TP3040(4)	40	AB	7.11	7.5/960	1.8	319-06/2
TP3061 (4)	45	AB	7.13	8/960	1.2	333A-02/2
TP3060(4)	60	AB	10.67	7.5/900	1.2	333A-02/2
TP3062(6)	60	AB	12	7/960	1.2	398-01/1

Microwave Transistors

L-BAND PULSE POWER

These products are designed to operate in short pulse width, 10 μs, low duty cycle, 1%, power amplifiers operating in the 960 to 1215 MHz band. All devices have internal impedance matching. The prime application is avionics equipment for distance measuring (DME), area navigation (TACAN) and interrogation (IFF). All devices offered with hermetic option.

Device	P_{out} Output Power Watts	P_{in} Input Power Watts	Gp (Min) Power Gain dB @ 1090 MHz	θ_{JC} °C/W	Package/Style
V_{CC} = 18 Volts — Class A & AB Common Emitter					
MRF1000MA	0.2	0.02	10	25	332-04/2
MRF1000MB	0.2	0.02	10	25	332A-03/2

(4) Internal Impedance Matched
(6) Internal Impedance Matched Push-Pull Transistors
★ New Product

Devices listed in bold, italic are Motorola preferred devices.

L-BAND PULSE POWER (continued)

Device	P_{out} Output Power Watts	P_{in} Input Power Watts	Gp (Min) Power Gain dB @ 1090 MHz	θ_{JC} °C/W	Package/Style
V_{CC} = 35 Volts — Class B & C Common Base					
MRF1002MA	2	0.2	10	25	332-04/1
MRF1002MB	2	0.2	10	25	332A-03/1
MRF1004MA	4	0.4	10	25	332-04/1
MRF1004MB	4	0.4	10	25	332A-03/1
V_{CC} = 50 Volts — Class C Common Base					
MRF1015MA	15	1.5	10	10	332-04/1
MRF1015MB	15	1.5	10	10	332A-03/1
MRF1035MA	35	3.5	10	5	332-04/1
MRF1035MB	35	3.5	10	5	332A-03/1
MRF1090MA	90	9	10	0.6	332-04/1
MRF1090MB	90	9	10	0.6	332A-03/1
MRF1150MA	150	25	7.8	0.3	332-04/1
MRF1150MB	150	25	7.8	0.3	332A-03/1

L-BAND LONG PULSE POWER

These products are designed for pulse power amplifier applications in the 960 to 1215 MHz frequency range. They are capable of handling up to 10 μs pulses in long pulse trains resulting in up to a 50% duty cycle over a 3.5 millisecond interval. Overall duty cycle is limited to 25% maximum. The primary applications for devices of this type are military systems, specifically JTIDS and commercial systems, specifically Mode S. Package type is hermetic.

Device	P_{out} Output Power Watts	P_{in} Input Power Watts	G_{PB} (Min) Power Gain dB @ 1215 MHz	θ_{JC} °C/W	Package/Style
V_{CC} = 28 Volts — Class C Common Base					
MRF10005	5	0.71	8.5	8	336E-02/1
V_{CC} = 36 Volts — Class C Common Base					
MRF10031(1)	30	3	10	3	376B-01/1
MRF10120	120	19	8	0.6	355C-02/1
V_{CC} = 50 Volts					
MRF10070 ★	70	7	10(16)	0.4	376C-01/1
MRF10150 ★	150	15	10(16)	0.25	376B-02/1
MRF10350 ★	350	45	9(16)	0.11	355E-01/1
MRF10500 ★	500	56	9(16)	0.12	355D-02/1

(1)To be introduced
(16)Typical @ 1090 MHz
★ New Product

Devices listed in bold, italic are Motorola preferred devices.

RF Power Bipolar Transistors — Microwave Transistors (continued)

2 GHz NARROWBAND CW

The MRF2000 Series of NPN Silicon microwave power transistors are designed for common base service in amplifier or oscillator applications in the 1 to 2.3 GHz frequency range.

Device	P_{out} Output Power Watts	P_{in} Input Power Watts	G_{PB} (Min) Power Gain dB @ 2 GHz	θ_{JC} °C/W	Package/Style
V_{CC} = 28 Volts — Class B & C Common Base					
MRW2001(10)	1	0.13	9	35	328F-01/2
MRW2003(10)	3	0.48	8	15	328F-01/2
MRW2005(10)	5	0.8	8	8.5	328F-01/2
MRW2010(10)	10	2	7	6	328F-01/2
MRW2015	15	3.8	6	3.5	393-02/1
MRW2020	20	6	5.2	3	393-02/1

2.3 GHz NARROWBAND CW

The MRW2300 Series are common-base configured transistors in hermetic packages with guaranteed performance characteristics at 2.3 GHz. They feature diffused ballast resistors and gold metallization for extreme ruggedness and reliability.

Device	P_{out} Output Power Watts	P_{in} Input Power Watts	G_{PB} (Min) Power Gain dB @ 2.3 GHz	θ_{JC} °C/W	Package/Style
V_{CC} = 20 Volts					
MRW2301	1.5	0.24	8	35	328F-01/2
MRW2304	4	0.64	8	17	328F-01/2
MRW2307	7	1	8.5	8.5	328F-01/2

3 GHz NARROWBAND CW

The MRW3000 Series are the industry's first 100% VSWR tolerant 3 GHz devices. They are common-base configured in hermetic packages (with or without flanges) and rated for 28 volt operation.

Device	P_{out} Output Power Watts	P_{in} Input Power Watts	G_{PB} (Min) Power Gain dB @ 3 GHz	θ_{JC} °C/W	Package/Style
V_{CC} = 28 Volts					
MRW3001	1	0.2	7	35	328F-01/2
MRW3003	3	0.75	6	17	328F-01/2
MRW3005	5	1.6	5	8.5	328F-01/2

(10) Available in flangeless package (Case 328-02/1) by placing suffix "F" after device number

0.6–2.7 GHz BROADBAND COMMON BASE

The MicRoAmp transistor employs MOS capacitors and other matching elements to transform the input, and in some devices, the output impedance to a more manageable level prior to the point where package parasitics can reduce the bandwidth capabillity (U.S. Patent 3,713,006). These devices are assembled in common-base configuration and include an all-gold metal system and diffused ballast resistors for long life. Those epoxy-sealed devices followed by Note 11 are also available in hermetic packages.

Device	Instantaneous Frequency Range F_L-F_H (MHz)	Min Output Power Watts	Min Gain dB	θ_{JF} °C/W	Package/Style
V_{CC} = 22 V					
MRAL1417-2	1400–1700	2	8	15	394-02/1
MRAL1417-6	1400–1700	6	7.4	8	394-02/1
MRAL1417-11	1400–1700	11	7.4	4.5	394-02/1
MRAL1417-25	1400–1700	25	7	2.5	394-02/1
MRAL1720-2	1700–2000	2	7.5	15	394-02/1
MRAL1720-5	1700–2000	5	6.5	8	394-02/1
MRAL1720-9	1700–2000	9	6.5	4.5	394-02/1
MRAL1720-20	1700–2000	20	6	2.5	394-02/1
MRAL2023-1.5	2000–2300	1.5	8	30	394-02/1
MRAL2023-3(11)	2000–2300	3	8	16	394-02/1
MRAL2023-6(11)	2000–2300	6	6.8	8	394-02/1
MRAL2023-12(11)	2000–2300	12	6.8	4.5	394-02/1
MRAL2023-18(11)	2000–2300	18	6.5	2.5	394-02/1
MRAL2327-1.3	2300–2700	1.3	5.5	30	394-02/1
MRAL2327-3	2300–2700	3	6.6	16	394-02/1
MRAL2327-6	2300–2700	6	7	8	394-02/1
MRAL2327-12	2300–2700	12	7	4.5	394-02/1
V_{CC} = 28 Volts					
MRA1300-10L	500–1500	10	7	2.1	360A-02/1
MRA0610-3	600–1000	3	7.8	15	394-02/1
MRA0610-9	600–1000	9	7.8	6	394-02/1
MRA0610-18A	600–1000	18	7.8	4	394-02/1
MRA0610-40A	600–1000	40	7	2.5	394-02/1
MRA1014-2	1000–1400	2	8.2	15	394-02/1
MRA1014-6(11)	1000–1400	6	7.4	8	394-02/1
MRA1014-12(11)	1000–1400	12	7.8	4.5	394-02/1
MRA1014-35A	1000–1400	35	7	2.5	394-01/1
MRA1214-55H	1200–1400	50	6.5	1.4	402-02/1
MRA1417-2	1400–1700	2	8	15	394-02/1
MRA1417-6(11)	1400–1700	6	7.4	8	394-02/1
MRA1417-11(11)	1400–1700	11	7.4	4.5	394-02/1
MRA1417-25A	1400–1700	25	7	2.5	394-02/1
MRA1720-2	1700–2000	2	7.5	15	394-02/1
MRA1720-5	1700–2000	5	6.5	8	394-02/1
MRA1720-9	1700–2000	9	6.5	4.5	394-02/1
MRA1720-20	1700–2000	20	6	2.5	394-02/1

(11)Hermetic package (393-01/1) is available by placing suffix "H" after device number

RF Power Bipolar Transistors — Microwave Transistors (continued)

L-BAND CW, NARROWBAND, COMMON BASE

The MRA1600 Series microwave power transistors are primarily intended for large-signal output and driver amplifier stages for satellite up/down links. Each is designed for Class C, common base amplifier applications.

Device	Instantaneous Frequency Range F_L-F_H (MHz)	Min Output Power Watts	Min Gain dB	θ_{JF} °C/W	Package/Style
V_{CC} = 28 Volts					
MRA1600-2	1600–1660	2	8.4	15	394-02/1
MRA1600-6	1600–1660	6	7.4	4.5	394-02/1
MRA1600-13	1600–1660	13	7.6	4.5	394-02/1
MRA1600-30	1600–1660	30	7	2.5	394-02/1
MRA1600-50H ★	1600–1660	50	6.5	1.5	402B-01/1

POWER OSCILLATOR

These oscillator devices are common collector configuration with diffused ballast resistors, gold metallization and hermetic packages to provide high reliability in severe environmental conditions. Each is fully characterized for power oscillator applications.

Device	Operating Conditions V_{CE}/I_C V/mA	Output Power — Watts/@ Freq. — GHz				Package/Style
		Minimum	Typ @ Low F	Typ @ Mid F	Typ @ High F	
TP62601	20/220	1.25/2	1.85/2.5	1.35/2	0.85/3	328F-01/3
TP62602	20/440	2.5/2	2.5/2	2/2.5	1.3/3	328F-01/3
TP63601	20/120	0.6/2.3	0.75/2.3	0.5/2.8	0.28/3.3	328F-01/3
TP63602	20/230	1.2/2.3	1.5/2.3	1/2.8	0.55/3.3	328F-01/3
TP64601	20/120	0.3/4	0.55/3	0.35/4	0.15/5	328F-01/3
TP64602	20/240	0.55/4	1.2/3	0.65/4	0.15/5	328F-01/3

Linear Transistors

The following sections describe a wide variety of devices specifically characterized for linear amplification. Included are low power and high power parts covering frequencies from 100 MHz to 4 GHz.

To 1 GHz, CLASS A

These devices offer a selection of performance and price for linear amplification to 1 GHz. The "MRA" prefix parts are input matched and feature high overdrive and extreme ruggedness capability.

Device	P_o @ 1 dB Comp. Point Watts	G_{SS} (Min)/Freq. Small Signal Gain dB/MHz	Bias Point (Vdc/A)	θ_{JC} °C/W	Package/Style
V_{CC} = 19 Volts					
MRA1000-3.5L	3.5	10/1000	19/0.6	8	145D-01/1
MRA1000-7L	7	9/1000	19/1.2	4	145D-01/1
MRA1000-14L	14	8/1000	19/2.4	2.1	145D-01/1
V_{CC} = 25 Volts					
RF1029	1.5	8/1000	—	12	244A-01/1
RF1030	3	7.5/1000	—	6	244A-01/1
RF1031	4.5	7/1000	—	3.5	244A-01/1
RF1032	6	6.5/1000	—	3.5	244A-01/1

To 2 GHz, CLASS A

The "RF" series offer low cost alternatives to matched devices primarily for use as pre-drivers to 2 GHz.

V_{CC} = 20 Volts

RF3094	0.5	10.5	—	40	328F-01/1
RF3095	0.8	9	—	35	328F-01/1
RF3096	1.6	9	—	22	328F-01/1

★ New Product

Devices listed in bold, italic are Motorola preferred devices.

VHF ULTRA LINEAR FOR TV APPLICATIONS

The following devices have been characterized for ultra-linear applications such as low-power TV transmitters in Band III. Each features diffused ballast resistors and an all-gold metal system to provide enhanced reliability and ruggedness.

Device	P_{ref} Watts	Gp (Min)/Freq. Power Gain dB/MHz	3 Tone IMD(12) dB	θ_{JC} °C/W	Package/Style
V_{CC} = 28 Volts					
TPV394A	5	15/225	−58	2.5	244C-02/1
TPV385	14	14/225	−53	1.5	316A-01/1
TPV375	20	8/225	−51	1.5	145A-10/1
TPV387	24	13/225	−50	1	316A-01/1
TPV376	30	7.5/225	−53	1	316A-01/1
TPV3100	28	14/225	−51	0.8	827-01/1
TPV387	90(13)	10/225	—	1	316A-01/1
TPV3100	100(13)	13/225	—	0.8	827-01/1

UHF ULTRA LINEAR FOR TV APPLICATIONS

The following devices have been characterized for ultra-linear applications such as low-power TV transmitters in Band IV and V. Each features diffused ballast resistors and an all-gold metal system to provide enhanced reliability and ruggedness.

Device	P_{ref} (Min) Watts	Gp (Min)/Freq. Power Gain dB/MHz	3 Tone IMD(12) dB	θ_{JC} °C/W	Package/Style
V_{CC} = 20 Volts					
TPV590	0.25	14/860	−58	30	305B-01/1
TPV591	0.5	13/860	−58	16	305B-01/1
TPV596A	0.5	11.5/860	−58	20	244C-02/1
TPV597	1	10.5/860	−58	9	244C-02/1
TPV598	4	7/860	−60	5	244C-02/1
V_{CC} = 25 Volts					
TPV593	2	8.5/860	−60	11	244C-02/1
TPV595A	14	8.5/860	−47	2.5	395-01/1
TPV695A	14	9.5/860	−47	2.5	395-01/1
TPV7025	25	8.5/860	−45	1.5	398-01/1
V_{CC} = 28 Volts					
TPV5051	50(13)	6.5/860	—	1.8	395-01/1
TPV5055B	50(13)	7/860	—	1.5	398-01/1
TPV8100B ★	100(13)	8.5/860	—	0.7	398-01/1
TPV8200B(1)	150(13)	8/860	—	0.7	397-01/1

(1)To be introduced
(12)Vision Carrier: −8 dB; Sound Carrier: −7 dB, Sideband Carrier: −16 dB
(13)Output power at 1 dB compression in Class AB
★ New Product

Devices listed in bold, italic are Motorola preferred devices.

RF Power Bipolar Transistors — Linear Transistors (continued)

MICROWAVE LINEAR POWER

Common emitter microwave devices are offered for a wide variety of uses in small and medium signal, Class A, AB and C applications up to 4 GHz. The use of all-gold metal systems, diffused ballast resistors and hermetic packaging results in devices that display excellent reliability even in military environment. Many part types are available with off-the-shelf TX equivalent screening.

Device	G_{SS} (Min) @ Freq. Small Signal Gain dB/GHz	1 dB Comp. Watts	P_{sat} Watts	−30 dB IMD Watts	Emitter Current mA	Package/Style
V_{CE} = 20 V						
MRW52001	6/2	1.8	2.5	1.5	220	400-01/1
MRW52101	6/2	1.8	2.5	1.5	220	328E-01/2
MRW52501	5/2	1.8	2.5	1.5	220	401-01/1
MRW52601	6/2	1.8	2.5	1.5	220	328F-01/1
MRW52102	6/2	3.6	5	3	440	328E-01/2
MRW52502	5/2	3.6	5	3	440	401-01/1
MRW52602	6/2	3.6	5	3	440	328F-01/1
MRW52104	5/2	7.2	10	6	880	328E-01/2
MRW52504	5/2	7.2	10	6	880	401-01/1
MRW52604	5/2	7.2	10	6	880	328F-01/1
MRW53001	6/3	0.8	1	0.8	120	400-01/1
MRW53101	6/3	0.8	1	0.8	120	328E-01/2
MRW53501	5/3	0.8	1	0.8	120	401-01/1
MRW53601	6/3	0.8	1	0.8	120	328F-01/1
MRW53102	6/3	1.6	2	1.5	230	328E-01/2
MRW53502	5/3	1.6	2	1.5	230	401-01/1
MRW53602	5/3	1.6	2	1.5	230	328F-01/1
MRW53505	5/3	4	5	4	600	401-01/1
MRW53605	6/3	4	5	4	600	328F-01/1
MRW54001	5/4	0.5	0.8	0.5	120	400-01/1
MRW54101	6/4	0.5	0.8	0.5	120	328E-01/2
MRW54501	5/4	0.5	0.8	0.5	120	401-01/1
MRW54601	6/4	0.5	0.8	0.5	120	328F-01/1
MRW54602	9/2	1	2	1	240	328F-01/1

BIAS DEVICES

The BT500 and BT500F bias devices are used to provide the proper bias point for Class AB linear amplifiers. They feature excellent thermal tracking and simple external circuitry. The BT500 is a hermetic, metal sealed device.

Device	I_F Typ mA	h_{FE} Min-Max	$V_{(BR)EBO}$ Min V	Package/Style
Bias Devices for Class AB 28–50 Volt Transistors				
BT500	500	20–100	4	036-03/1
BT500F	500	20–100	4	211-07/1

RF Small-Signal Bipolar Transistors

Motorola's broad line of RF Small-Signal Transistors includes NPN and PNP Silicon Bipolar Transistors characterized for low noise amplifiers, mixers, oscillators, multipliers, non-saturated switches and low-power drivers.

These devices are available in a wide variety of package types: metal can, plastic Macro-X and Macro-T, ceramic and surface mounted. Most of these transistors are fully characterized with y or s parameters; and, in addition, parts with Hi Rel processing are available to meet unique customer requirements.

CASE 20-03
STYLE 10
(TO-206AF)
(TO-72)

CASE 22-03
STYLE 1
(TO-206AA)

CASE 26-03
STYLE 1
(TO-206AB)
(TO-46)

CASE 29-04
STYLE 2
(TO-226AA)

CASE 79-04
STYLE 1
(TO-205AD)
(TO-39)

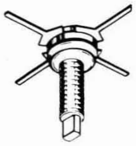

CASE 144D-06
STYLE 1

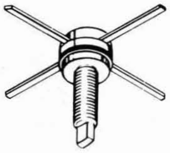

CASE 244A-01
STYLES 1, 3
CASE 244D-01
STYLE 1

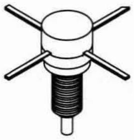

CASE 244D-01
STYLE 1, 2

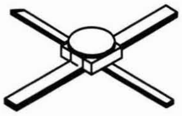

CASE 303-01
STYLE 1
(.100″ CERAMIC)
CASE 303A-01
STYLE 1
(.070″ CERAMIC)

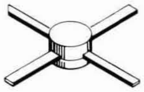

CASE 305A-01
(.200 PILL)

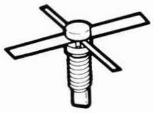

CASE 305B-01
STYLE 1
(.200 SOE)

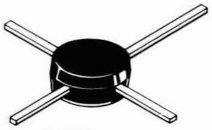

CASE 317-01
STYLES 2, 3
(MACRO-X)

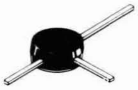

CASE 317A-01
STYLE 2
(MACRO-T)

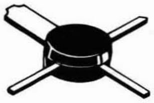

CASE 317D-02
STYLE 3

CASE 318-07
STYLE 6

CASE 318A-05
STYLES 1, 4
LOW PROFILE
(SOT-143)

CASE 401-01
STYLE 1

CASE 751-03
STYLE 1
(SO-8)

RF Small-Signal Bipolar Transistors

RF Small-Signal Transistor Gain Characteristics

Curve numbers apply to transistors listed in the subsequent tables.

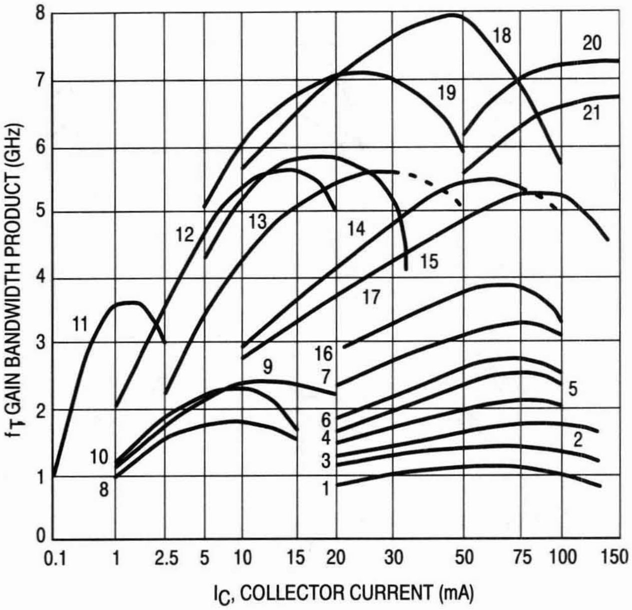

Selection by Package

In small-signal RF applications, the package style is often determined by the end application or circuit construction technique. To aid the circuit designer in device selection, the Motorola broad range of RF small-signal amplifier transistors is organized by package. Devices for other applications such as oscillators or switches are shown in the appropriate preceding tables. **These devices are NPN polarity unless otherwise designated.**

PLASTIC SOE CASE

Device	Gain-Bandwidth f_T GHz Typ	@ I_C mA	Curve No. Page 20	Noise Figure NF dB Typ	@ f MHz	Gain dB Typ	@ f MHz	Maximum Ratings $V_{(BR)CEO}$ Volts	I_C mA	P_T mW	Package
Case 29-04/2, TO-226AA											
MPS536(5)	5	−20	19	4.5	500	14	500	−10	−30	625	
MPS571	6	50	18	2	500	14	500	10	80	625	
MPS901	4.5	15	12	2.5	900	12	900	15	30	300	
MPS911	7	30	13	1.7	500	16.5	500	12	40	625	
MPS3866	0.8	50	1	—	—	10	400	30	400	625	
Case 317-01/2 — MACRO-X											
MRF521(5)	4.2	−50	—	2.8	1000	11	1000	−10	−70	750	
MRF536(5)	6	−20	19	4.5	1000	10	1000	−10	−30	300	
MRF559	3	100	16	—	—	13	512	18	150	2000	
MRF571	8	50	18	1.5	1000	12	1000	10	70	1000	
MRF581	5	75	17	2	500	15.5	500	18	200	2500	
MRF581A	5	75	17	1.8	500	15.5	500	15	200	2500	
MRF837	5	75	17	—	—	10	870	16	200	2500	
MRF901	4.5	15	12	2	1000	12	1000	15	30	375	
MRF941	8	15	—	1.7	2000	12.5	2000	10	50	400	
MRF951	7.5	30	—	1.7	2000	12.5	2000	10	100	1000	
MRF2369	6	40	18	1.5	1000	12	1000	15	70	750	

(5)PNP

(continued)

Devices listed in bold, italic are Motorola preferred devices.

PLASTIC SOE CASE (continued)

Device	Gain-Bandwidth f_T GHz Typ	@ I_C mA	Curve No. Page 20	Noise Figure NF dB Typ	@ f MHz	Gain dB Typ	@ f MHz	Maximum Ratings $V_{(BR)CEO}$ Volts	I_C mA	P_T mW	Package
Case 317A-01/2 — MACRO-T — continued											
BFR90	5	14	12	2.4	500	18	500	15	30	180	
BFR91	5	30	13	1.9	500	16	500	12	35	180	
BFR96	4.5	50	14	2	500	14.5	500	15	100	500	
BFW92A	4.5	10	15	2.7	500	16	500	15	35	180	
MRF580	5	75	17	2	500	14	500	18	200	2500	
MRF580A	5	75	17	1.8	500	14	500	15	200	2500	
Case 317D-02/2,3											
MRF553	—	—	—	—	—	13	175	16	500	3000	
MRF555	—	—	—	—	—	12.5	470	16	400	3000	
MRF557	—	—	—	—	—	9	870	16	400	3000	
Case 318-07/6 — SOT-23											
BFR92	3.4	14	—	30	500	15	—	15	25	350	
BFR93	3.4	30	—	2.5	30	—	—	12	35	350	
BFS17	1.3	25	—	5	30	—	—	15	—	350	
MMBR536L(5)	5.5	−20	19	4.5	500	14	500	−10	−30	350	
MMBR571L	8	50	18	2	500	16.5	500	10	80	350	
MMBR901L	4	15	12	1.9	1000	12	1000	15	30	350	
MMBR911L	6	30	13	2	500	17	500	12	40	350	
MMBR920L	4.5	14	—	2.4	500	15	500	15	35	350	
MMBR941L	8	15	—	2.1	2000	8.5	2000	10	50	400	
MMBR951L	8	30	—	2.1	2000	7.5	2000	10	100	500	
MMBR931L	3	1	11	4.3	1000	10	1000	5	5	350	
MMBR4957L(5)	1.2	−2	10	3	450	17	450	−30	−30	350	
MMBR5031L	1	5	—	2.5	450	17	450	10	20	350	
MMBR5179L	1.4	5	8	4.5	200	15	200	12	50	350	
Case 318A-05/1 — SOT-143											
MRF0211L	5.5	40	18	1.8	1000	9.5	1000	15	70	580	
MRF5211L(5)	4.2	−50	—	2.8	1000	11	1000	−10	−70	580	
MRF5711L	8	50	18	1.6	1000	13.5	1000	10	70	580	
MRF9011L	3.8	15	12	2.3	1000	10.2	1000	15	30	300	
MRF9331L	5	1	—	2.5	1000	12.5	1000	8	1	50	
MRF9411L	8	15	—	2.1	2000	9.5	2000	10	50	400	
MRF9511L	8	30	—	2.1	2000	9	2000	10	100	500	

(5)PNP

Devices listed in bold, italic are Motorola preferred devices.

RF Small-Signal Bipolar Transistors — Selection by Package (continued)

PLASTIC SOE CASE (continued)

Case 751-03/1 — SO-8

Device	Gain-Bandwidth f_T GHz Typ	@ I_C mA	Curve No. Page 20	Noise Figure NF dB Typ	@ f MHz	Gain dB Typ	@ f MHz	Maximum Ratings $V_{(BR)CEO}$ Volts	I_C mA	P_T mW	Package
MRF3866	0.8	50	1	—	—	10.5	400	30	400	1000	
MRF4427	1.6	50	1	—	—	18	175	20	400	1000	
MRF5160(5)	0.8	−50	1	—	—	10	400	−40	−400	1000	
MRF5583(5)	2.1	−35	5	—	—	1.5	250	−30	−500	1000	
MRF5812	5.5	75	17	2	500	15.5	500	15	200	1500	
MRF5943	1.5	35	4	3.4	200	12	250	30	400	1000	
MRF8372	5	75	17	—	—	10	870	16	200	1500	
MRFQ17	2.25	50	5	—	—	12	500	25	300	1000	
MRFQ19	5.3	50	14	3.5	500	14.6	500	15	150	1000	

CERAMIC SOE CASE

Case 244A-01/1,3

LT2001	3	90	7	2.5	300	11.5	300	20	200	5000	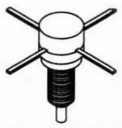
MRF548(15)	—	—	2	—	—	5.5	250	70	400	5000	
MRF587	5.5	90	17	3	500	13	500	15	200	5000	

Case 244D-01/1

LT4217A	5.5	90	17	2.5	500	15	500	12	400	5000	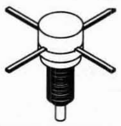
TP3098	2.6	100	6	6.5	500	11.5	500	20	200	5000	

(5)PNP
(15)Common Base Configuration

Devices listed in bold, italic are Motorola preferred devices.

CERAMIC SOE CASE (continued)

Device	Gain-Bandwidth f_T GHz Typ	@ I_C mA	Curve No. Page 20	Noise Figure NF dB Typ	@ f MHz	Gain dB Min	@ f MHz	Maximum Ratings $V_{(BR)CEO}$ Volts	I_C mA	P_T mW	Package
Case 303-01/1											
2N6603	5.5	15	12	2	1000	13	1000	15	30	400	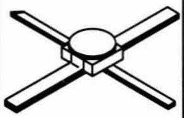
2N6604	5.5	30	13	2.7	1000	12	1000	15	50	500	
2N6618	—	—	—	2.2	2000	11	2000	20	20	300	
2N6679	($f_{1\ dB}$ is 18.5 dBm Typ @ 4 GHz)					9	4000	20	70	900	
MRF522(5)	4.2	−50	—	2.8	1000	11	1000	−10	−50	620	
MRF572	8	50	18	1.5	1000	12	1000	10	70	750	
MRF942	8	15	—	1.7	2000	12.5	2000	10	50	300	
MRF952	7.5	30	—	1.7	2000	12.5	2000	10	100	600	
MRF962	4.5	50	14	2	500	16.5	500	15	100	750	
Case 305B-01/1											
TP3400	3	125	—	7	500	14.5	860	20	400	5000	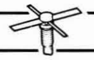
Case 401-01/1											
LT3014	3	90	7	3.1	300	14	500	20	200	5000	

METAL CAN

Case 20-03/10, TO-206AF

Device	f_T GHz Typ	I_C mA	Curve No. Page 20	NF dB Typ	f MHz	Gain dB Min	f MHz	$V_{(BR)CEO}$ Volts	I_C mA	P_T mW	Package
2N2857	1.6	8	8	4.5	450	12.5	450	15	40	200	
2N4957(5)	1.6	−2	10	3	450	17	450	−30	−30	200	
2N5031	1.6	5	8	2.5	450	14	450	10	20	200	
2N5179	1.4	10	8	4.5	200	15	200	12	50	200	
2N5835	2.5	10	6	—	—	—	—	10	15	200	
2N6304	1.8	10	9	4.5	450	15	450	15	50	200	

(5) PNP

Devices listed in bold, italic are Motorola preferred devices.

RF Small-Signal Bipolar Transistors — Selection by Package (continued)

METAL CAN (continued)

Device	Gain-Bandwidth @ f_T GHz Typ	I_C mA	Curve No. Page 20	Noise Figure @ NF dB Typ	f MHz	Gain @ dB Min	f MHz	Maximum Ratings $V_{(BR)CEO}$ Volts	I_C mA	P_T mW	Package
Case 20-03/10, TO-206AF											
BFY90	1.7	25	9	5	500	21[16]	200	15	50	200	
MM4049[5]	5	−20	19	3[16]	500	11.5	500	−10	−30	200	
MRF904	4	15	12	1.5[16]	450	16[16]	450	15	30	200	
Case 79-04/1, TO-205AD											
2N3553	0.5	100	—	—	—	10	175	40	1000	7000	
2N3866	0.7	50	—	—	—	10	400	30	400	5000	
2N3866A	1	50	—	—	—	10	400	30	400	5000	
2N5109	1.5	50	4	3[16]	200	11	216	20	400	2500	
2N5583[5]	1.5	−100	5	—	—	—	—	−30	−500	5000	
2N5943	1.5	50	4	3.4[16]	200	11.4[16]	200	30	400	3500	
LT1001A	3	90	7	2.5	300	13.5	300	20	200	3000	
LT4239A	5	90	21	2.5	500	14	500	12	400	3000	
MRF517	2.7	60	7	7.5	300	10[16]	300	20	150	2500	
MRF544	1.4	50	2	—	—	16.5[16]	250	70	400	3500	
MRF545[5]	1.2	−50	2	—	—	15.5[16]	250	−70	−400	3500	
MRF586	4.5	90	17	4	500	9	500	17	200	2500	
2N5108	1.2	50	2	—	—	5	1000	30	400	3500	

(5) PNP
(16) Typical

Devices listed in bold, italic are Motorola preferred devices.

Low-Noise

The Small-Signal devices listed are designed for low noise and high gain amplifier mixer, and multiplier applications. Each transistor type is available in various packages. **Polarity is NPN unless otherwise noted.**

Package	Name	Case Number	Curve Number						
			1	2	3(5)	4	5	6	7
	MACRO-T	317A-01/2	—	—	—	—	MRF580	—	BFR91
	MACRO-X	317-01/2	—	MRF941 MRF951(18)	MRF521	MRF571 MRF2369(17)	MRF581	MRF901	—
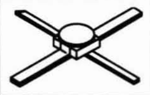	.1″ Ceramic	303-01/1	2N6618 2N6679(18)	MRF942 MRF952(18)	MRF522	MRF572	—	2N6603	2N6604
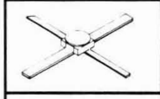	.07″ Ceramic	303A-01/1	2N6617	—	—	—	—	—	—
	TO-206AF	20-03/10	—	—	MRF524	—	—	MRF904	—
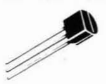	TO-226AA	29-04/2	—	—	—	MPS571	—	MPS901	MPS911
	SOT-23	318-07/6	—	MMBR941L MMBR951L(18)	—	MMBR571L	—	MMBR901L	MMBR911L
	SOT-143	318A-05/1	—	MRF9411L MRF9511L(18)	MRF5211L	MRF5711L MRF0211L(17)	—	MRF9011L	—
	SO-8	751-03/1	—	—	—	—	MRF5812	—	—

(5)PNP
(17)Higher Voltage Version
(18)Higher Current Version

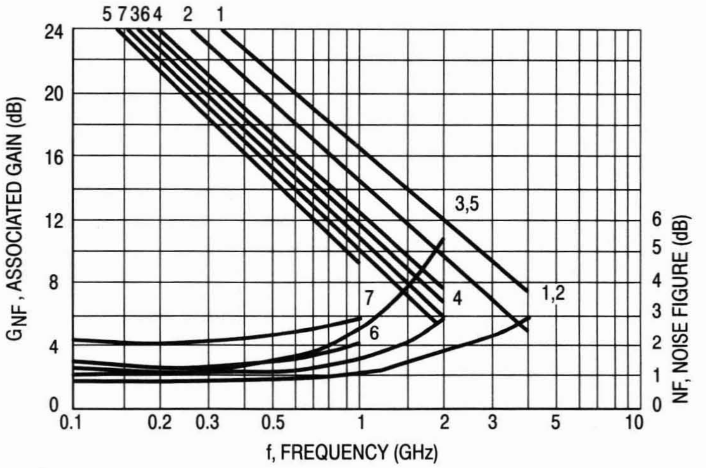

Gain and Noise Figure versus Frequency

RF Small-Signal Bipolar Transistors (continued)

CATV, MATV and Class A Linear

For Class A linear CATV/MATV applications. Listed according to increasing gain bandwidth (f_T).

Device	Nominal Test Conditions V_{CE}/I_C Volts/mA	f_T MHz Typ	Noise Figure	Distortion Specifications				$V_{(BR)CEO}$ V	Package/ Style
			Typ/Freq. dB/MHz	2nd Order IMD	3rd Order IMD	12 Ch. Cross-Mod.	Output Level dBmV		
2N5179	6/10	1400	3.2/200					12	20-03/10
MMBR5179L	6/5	1500	4/450					12	318-07/6
2N5109	15/50	1500	3/200					20	79-04/1
2N5943	15/50	1500	3.4/200	−50		−4	+50	30	79-04/1
MRF5943	15/50	1500	3.4/200					30	751-03/1
MRF5583(5)	10/−100	1500						−30	751-03/1
BFY90	5/25	1700	2.5/500					15	20-03/10
2N6304	5/10	1800	3.2/450					15	20-03/10
MMBR4957L(5)	10/−2	2000	3/450					−30	318-07/6
MMBR5031L	6/5	2000	1.9/450					10	318-07/6
MRFQ17	12.5/50	2200						25	751-03/1
TP3098	15/100	2600	6.5/500				1(20)	20	244A-01/1
MRF517	15/60	2700	6.5/300	−60	−72	−57	+45	20	79-04/1
LT1001A	14/90	3000	2.5/300					20	79-04/1
LT2001	14/90	3000	2.5/300					20	244A-01/1
TP3400	18/125	3000	7/500				1.2(20)	20	305B-01/1
MMBR920L	10/14	4500	2.4/500					15	318-07/6
BFW92A	10/10	4500	2.7/500					15	317A-01/2
MRF586	15/90	4500	3/500	−50	−72		+50	17	79-04/1
BFR96	10/50	4500	2/500					15	317A-01/2
MRF962	10/50	4500	2/500					15	303-01/1

(5)PNP
(20)Output in volts according to DIN45004B

(continued)

Devices listed in bold, italic are Motorola preferred devices.

Device	Nominal Test Conditions V_{CE}/I_C Volts/mA	f_T MHz Typ	Noise Figure	Distortion Specifications				$V_{(BR)CEO}$ V	Package/ Style
			Typ/Freq. dB/MHz	2nd Order IMD	3rd Order IMD	12 Ch. Cross-Mod.	Output Level dBmV		
BFR90	10/14	5000	2.4/500					15	317A-01/2
BFR91	5/30	5000	1.9/500					12	317A-01/2
MRF581	10/75	5000	2/500		−65		+50	18	317-01/2
MRF581A	10/75	5000	1.8/500		−65		+50	15	317-01/2
MRF5812	10/75	5000	1.8/500		−65		+50	15	751-03/1
LT4217A	14/90	5000	4/500					12	244D-01/1
LT4239A	14/90	5000	4/500					12	79-04/1
MRF587	15/90	5500	3/500	−52	−72		+50	17	244A-01/1
2N6679	(Has $P_{1\ dB}$ of 18.5 dBm Typ @ 4 GHz)							20	303-01/1

CRT Drivers

These discrete devices are specially designed for CRT driver applications requiring high frequency response and high voltage, such as high resolution color graphics video monitors. Gold metallized dice are used to insure high reliability and improved ruggedness.

Device	$V_{(BR)CEO}$ V	$V_{(BR)CBO}$ V	$I_{C(max)}$ mA	h_{FE}	$f_T/V_{CE}, I_C$ GHz/V, mA	C_{CB}/V_{CE} pF/V	Package/ Style
NPN							
MRF544	70	120	400	15–	1.4/10, 50	1.8/10	79-04/1
MRF546	70	120	600	15–	—	3.6/10	244A-01/3
MRF548	70	120	400	15–	—	2/10	244A-01/3
PNP							
MRF545	−70	−100	−400	15–	1.2/25, − 50	2/−10	79-04/1
MRF547	70	−100	−600	15–	—	3.6/−10	244A-01/3
NPN-PNP Pair							
CR820	70/−65	120/−08	—	40(16)	1/±15, ±50	2.5/±15	244D-01/2

(16)Typical
(20)Output in volts according to DIN45004B

Devices listed in bold, italic are Motorola preferred devices.

RF Small-Signal Bipolar Transistors (continued)

High-Speed Switches

The transistors listed below are for use as high-frequency current-mode switches. They are also suitable for RF amplifier and oscillator applications. The devices are listed in ascending order of collector current. These devices are NPN polarity unless otherwise designated.

Device	Test Conditions I_C/V_{CE} mA/Volts	f_T MHz Min	$r_{b'} C_C$ ps Max	Package/Style
MM4049(5)	20/5	4000	15	20-03/10
2N5583(5)	50/10	1000	8(16)	79-04/1
2N5943	50/15	1200	5.5(16)	79-04/1

(5)PNP
(16)Typical

UHF and Microwave Oscillators

The transistors listed below are for UHF and microwave oscillator applications as initial signal sources or as output stages of limited range transmitters. Devices are listed in order of increasing output power.

Device	Test Conditions		P_{out} mW Min	f_T MHz Typ	Package/Style
	f MHz	V_{CC} Volts			
2N5179	500	10	20	1400	20-03/10
2N2857	500	10	30	1600	20-03/10
MM8009	1680	20	200	1400	79-04/1
2N5108	1680	20	300	1400	79-04/1
2N3866	400	15	1000	800	79-04/1
MPS3866	400	15	1000	800	29-04/2
MRF3866	400	15	1000	800	751-03/1

Devices listed in bold, italic are Motorola preferred devices.

Complementary Devices

The transistor complements listed are suitable for most applications requiring NPN and PNP devices of similar RF characteristics. Special matching of complementary transistors is available upon request. See indicated pages for specifications.

NPN	Page #	PNP	Page #
2N2857	5.8-23	2N4957	5.8-23
2N3866	5.8-9	2N5160	5.8-9
2N5943	5.8-24	2N5583	5.8-24
MRF904	5.8-24	MM4049	5.8-24
MRF571	5.8-20	MRF521	5.8-20

RF Amplifiers

Motorola's line of RF amplifiers designed and specified for use in land mobile radios, CATV distribution systems and general purpose wideband amplification applications. They feature small size, matched inputs and outputs, high stability and guaranteed performances specifications. For the user they offer the benefits of smaller and less complex system designs, in less time and at lower overall cost.

Each amplifier uses modern transistor chips which are gold metallized and have silicon nitride passivation for increased reliability and long life. Chip and wire construction features MOS capacitors and laser trimmed nichrome resistors. Circuit substrates and metallization have been selected for optimum performance cost and reliablity.

CASE 31A-03
STYLE 2
(TO-205AD)

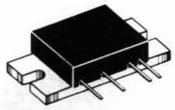
CASE 301AA-01
STYLE 1

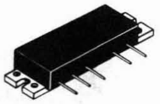
CASE 301AB-01
STYLE 1

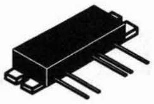
CASE 301E-04
STYLE 1

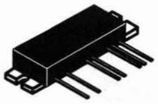
CASE 301F-03
STYLE 1

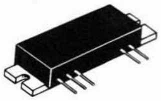
CASE 301G-03
STYLE 1

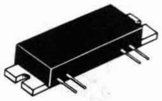
CASE 301H-03
STYLE 2

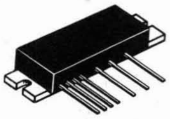
CASE 301J-02
STYLE 1

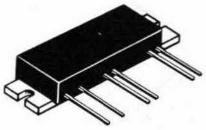
CASE 301K-02
STYLE 3

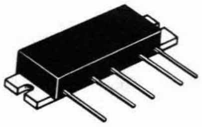
CASE 301L-02
STYLE 2

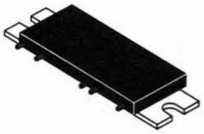
CASE 301N-01
STYLE 1

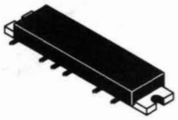
CASE 301R-01
STYLE 1

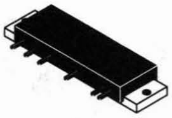
CASE 301S-02
STYLE 1

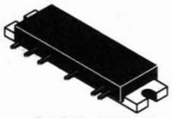
CASE 301T-02
STYLE 1

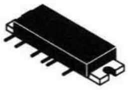
CASE 301V-02
STYLE 1

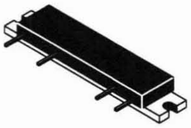
CASE 301W-01
STYLE 1

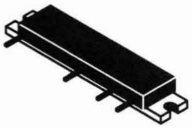
CASE 301X-01
STYLE 1

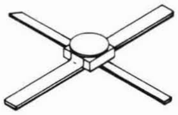
CASE 303A-01
STYLE 3

CASE 317-01
STYLE 3

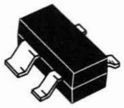
CASE 318A-05
STYLE 4

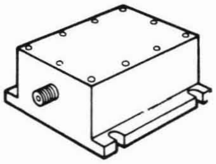
CASE 389-01
STYLE 1

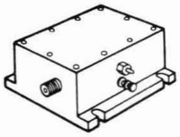
CASE 389A-01
STYLE 1

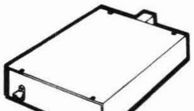
CASE 389B-02
STYLE 1

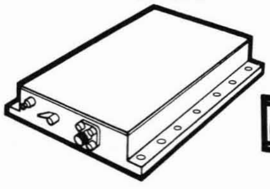
CASE 389C-01
STYLE 1
CASE 389D-01
STYLE 1
CASE 389E-01
STYLE 1

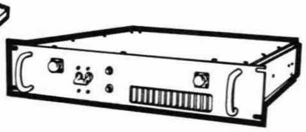
CASE 389F-01
STYLE 1

RF Amplifiers (continued)

CASE 389G-01
STYLE 1

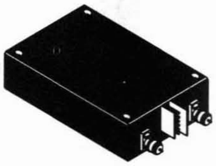
CASE 389J-02
STYLE 1

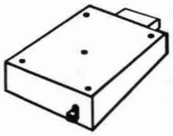
CASE 389M-01
STYLE 1

CASE 389N-01
STYLE 1

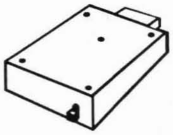
CASE 389P-01
STYLE 1

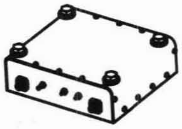
CASE 389S-01
STYLE 1

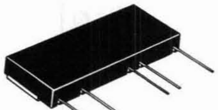
CASE 413-02
STYLE 1

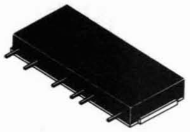
CASE 413A-02
STYLE 1

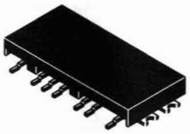
CASE 420-01
STYLES 1, 2

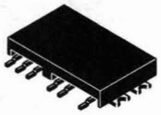
CASE 420A-01
STYLE 1

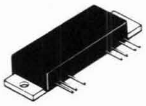
CASE 700-04
STYLE 1

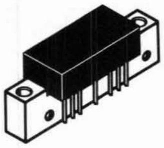
CASE 714-04
STYLE 1

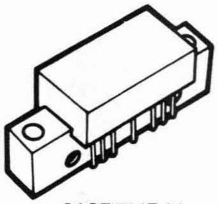
CASE 714F-01
STYLE 1

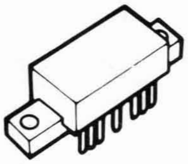
CASE 714G-01
STYLE 1

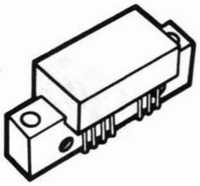
CASE 714H-01
STYLE 1

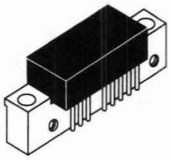
CASE 714M-01
STYLE 1, 2

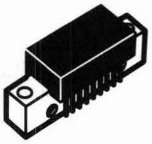
CASE 714P-01
STYLES 2, 3

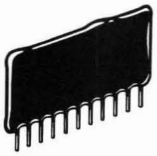
CASE 790-01
STYLE 1

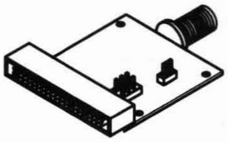
CASE 817A-01
STYLE 1

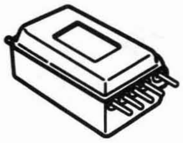
CASE 825-03
STYLE 1

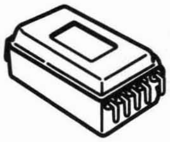
CASE 825A-02
STYLE 1

HIGH POWER

Complete amplifiers with 50 ohm in/out impedances are available for a variety of applications including land mobile radios, base stations, TV transmitters and other uses requiring large-signal amplification, both linear and Class C. Frequencies covered range from 66 MHz to 960 MHz with power levels extending to 70 watts.

Land Mobile/Portable

The advantages of small size, reproducibility and overall lower cost become more pronounced with increasing frequency of operation. These amplifiers offer a wide range in power levels and gain, with guaranteed performance specifications for bandwidth, stability and ruggedness.

1.5 GHz, L-BAND (for JSMR) — Class C (Silicon Bipolar Die)

Device	P_{out} Output Power Watts	P_{in} Input Power Watts	f Frequency MHz	G_P Power Gain dB Min	V_{CC} Supply Voltage Volts	Package/Style
MHW1503 ★	3	0.004	1465–1477	28.8	9.8	301E-04/1
136–174 MHz, VHF BAND — Class C (Silicon Bipolar Die)						
MHW607-1	7	0.001	136–150	38.4	7.5	301K-02/3
MHW607-2	7	0.001	146–174	38.4	7.5	301K-02/3
MHW607-3	7	0.001	174–195	38.4	7.5	301K-02/3
MHW607-4	7	0.001	184–210	38.4	7.5	301K-02/3
400–512 MHz, UHF BAND — Class C (Silicon Bipolar Die)						
MHW703	2.3	0.002	450–460	30.6	7.2	301J-02/1
MHW707-1	7	0.001	403–440	38.4	7.5	301J-02/1
MHW707-2	7	0.001	440–470	38.4	7.5	301J-02/1
MHW709-1	7.5	0.1	400–440	18.8	12.5	700-04/1
MHW709-2	7.5	0.1	440–470	18.8	12.5	700-04/1
MHW709-3	7.5	0.1	470–512	18.8	12.5	700-04/1
MHW710-1	13	0.15	400–440	19.4	12.5	700-04/1
MHW710-2	13	0.15	440–470	19.4	12.5	700-04/1
MHW710-3	13	0.15	470–512	19.4	12.5	700-04/1
MHW720-1	20	0.15	400–440	21	12.5	700-04/1
MHW720-2	20	0.15	440–470	21	12.5	700-04/1
MHW720A1(21)	20	0.15	400–440	21	12.5	700-04/1
MHW720A2(21)	20	0.15	440–470	21	12.5	700-04/1
MHW720A3 ★	20	0.15	450–458	21	12.5	700-04/1
806–960 MHz, UHF BAND — Class C (Silicon Bipolar Die)						
MHW801-1	1.6	0.001	820–850	32	6	413-02/1
MHW801-2	1.6	0.001	870–905	32	6	413-02/1
MHW801-3	2	0.001	890–915	33	6	413-02/1
MHW801-4	1.6	0.001	915–925	32	6	413-02/1
MHW851-1	1.6	0.001	820–850	32	6	301N-01/1
MHW851-2	1.6	0.001	870–905	32	6	301N-01/1
MHW851-3	2	0.001	890–915	33	6	301N-01/1
MHW851-4	1.6	0.001	915–925	32	6	301N-01/1
MHW803-1	2	0.001	820–850	33	7.5	301E-04/1
MHW803-2	2	0.001	806–870	33	7.5	301E-04/1
MHW803-3	2	0.001	870–905	33	7.5	301E-04/1
MHW804-1 ★	4	0.001	800–870	36	7.5	301F-03/1
MHW804-2 ★	4	0.001	896–940	36	7.5	301F-03/1
MHW806A1(21)	6	0.03	820–850	23	12.5	301H-03/2
MHW806A2(21)	6	0.03	806–870	23	12.5	301H-03/2
MHW806A3(21)	6	0.04	890–915	21.7	12.5	301H-03/2
MHW806A4(21)	6	0.04	870–950	21.7	12.5	301H-03/2

(1) To be introduced

(21) Designed for Wide Range P_{out} Level Control

★ New Product

(continued)

Devices listed in bold, italic are Motorola preferred devices.

RF Amplifiers — High Power (continued)

806–960 MHz, UHF BAND — Class C (Silicon Bipolar Die) (continued)

Device	P_{out} Output Power Watts	P_{in} Input Power Watts	f Frequency MHz	G_P Power Gain dB Min	V_{CC} Supply Voltage Volts	Package/Style
MHW807-1(21)	6	0.001	820–850	38	12.5	301L-02/2
MHW807-2(21)	6	0.001	870–905	38	12.5	301L-02/2
MHW812A3(21)	12	0.1	870–950	20.8	13	301H-03/1
MHW820-3(21)	18	0.35	870–950	17.1	12.5	301G-03/1
MHW820-1(21)	20	0.25	806–870	19	12.5	301G-03/1
MHW820-2(21)	20	0.25	806–890	19	12.5	301G-03/1
806–960 MHz, UHF BAND — Class C (GaAs FET Die)						
MHW9001-1(21)★	1.4	0.001	824–849	31.5	5.8	420-01/1
MHW9001-2(21)★	1.4	0.001	870–905	31.5	5.8	420-01/1
MHW9001-3(21)★	1.6	0.001	890–915	32	5.8	420-01/1
MHW9001-4(21)★	1.4	0.001	898–925	31.5	5.8	420-01/1
MHW9002-1(21)★	1.4	0.005	824–849	24.5	5.8	420A-01/1
MHW9002-2(21)★	1.4	0.005	870–905	24.5	5.8	420A-01/1
MHW9002-3(21)★	1.6	0.005	890–915	25	5.8	420A-01/1
MHW9002-4(21)★	1.4	0.005	898–925	24.5	5.8	420A-01/1
806–960 MHz, UHF BAND — Class AB (Silicon Bipolar Die)						
MHW921(1)(21)	1.6(2)	0.001	824–849	32	6	420-01/2
MHW926(1)(21)	6(2)	0.1	824–849	17.8	12.5	301AB-01/1
MHW927(1)(21)	6(2)	0.001	824–849	37.8	12.5	301AA-01/1
806–960 MHz, UHF BAND — Class C (Silicon FET Die)						
MHW947A1(21)★	6	0.001	824–849	37.8	12.5	301W-01/1
MHW947B1(21)★	6	0.001	824–849	37.8	12.5	301X-01/1
MHW947A2(21)★	6	0.001	872–905	37.8	12.5	301W-01/1
MHW947B2(21)★	6	0.001	872–905	37.8	12.5	301X-01/1
MHW947A3(21)★	6	0.001	898–925	37.8	12.5	301W-01/1
MHW947B3(21)★	6	0.001	898–925	37.8	12.5	301X-01/1
890–915 MHz (for GSM) — Class AB (Silicon Bipolar Die)						
MHW903(21)★	3.5	0.001	890–915	35.4	7.2	413A-02/1
MHW953(21)★	3.5	0.001	890–915	35.4	7.2	301V-02/1
MHW954(21)★	3.5	0.1	890–915	15.4	7.2	301Y-01/1
MHW909(21)★	9	0.1	890–915	19.5	7.2	301T-02/1
MHW912(21)★	12	0.001	890–915	40.8	12.5	301R-01/1
MHW914(21)★	14	0.001	890–915	41.4	12.5	301R-01/1
MHW915(21)★	14	0.1	890–915	21.4	12.5	301T-02/1
MHW932(21)★	32	0.1	890–915	26	12.5	301S-02/1

(1) To be introduced
(2) Average Power; Peak power is twice average power
(21) Designed for Wide Range P_{out} Level Control
★ New Product

Devices listed in bold, italic are Motorola preferred devices.

Base Station

The convenience of complete amplifiers for base station transmitters is offered for many two-way radio bands from VHF through the high-UHF cellular bands (806–960 MHz). Power levels to 120 W are available operating from 24 to 26 volt supplies. Class AB or Class A operation provides linear performance suitable in both analog and digital systems.

The AMR/ACR series can optionally be modified in frequency, power and mechanical outline. Please contact your local MOTOROLA field sales office.

806–960 MHz BAND — Class A and/or AB

Device	P_{out} Output Power Watts	P_{in} Input Power Watts	f Frequency MHz	G_P Power Gain dB Min	V_{CC} Supply Voltage Volts	Package/Style
PA900-45-10LGC ★	10	0.0003–0.3	850–900	15–45	25	389S-01/1
AMR900-60A(22)	20	2.25	800–960	9.5	26	389B-02/1
ACR900-30E	30	0.48	890–960	18	25	389J-02/1
AMR900-60	60	12	800–960	7	24	389B-02/2
PA900-19-60L ★	60	0.76	850–900	19	25	389S-01/1
AMR960-100	100	20	860–960	7	26	389M-01/1
PA900-19-100L ★	100	1.25	850–900	19	25	389S-01/1

(22) Class A device
★ New Product

Devices listed in bold, italic are Motorola preferred devices.

RF Amplifiers — High Power (continued)

TV Transmitters

These amplifiers are characterized for ultra-linear applications in Band IV and V TV transmitters.

Device	Frequency MHz	P_{ref} Watts	Gp (Min)/Freq. Power Gain dB/MHz	3 Tone(12) IMD 1 dB	3 Tone(24) IMD 2 dB	V_{CC} Volts	Package/ Style
ATV5030	470–860	20	7.5/860	–51	–54	26	389B-02/1
ATV6031	470–860	20	10.5/860	–50	–53	26.5	389B-02/1
ATV5090B	470–860	90(13)	7/860	—	—	28	389N-01/1
ATV7050	470–860	30	8/860	–51	–54	25	389P-01/1

PAM Series — Ultra Linear

PAM devices are class A and class AB linear amplifiers with medium and high output powers in the VHF and UHF frequency range. They feature a wide dynamic range and a high third order intercept point. These high quality amplifiers are offered in a heavy-duty machined housing and are ideal for applications in instrumentation, communications and electronic warfare.

VHF/UHF — Class A

Device	Frequency MHz	P_o Min Watts	Gain Typ dB	V_{CC} Volts	3rd Order Intercept Typ dBm	Package/ Style
PAM225-42-10LA	172–225	10	46	28	–58 (25)	389C-01/1

VHF/UHF BAND — Class A

Device	Frequency MHz	P_o Min Watts	Gain Typ dB	V_{CC} Volts	3rd Order Intercept Typ dBm	Package/ Style
PAM0105-29-6L	100–500	6	31	24	+48.5	389C-01/1
PAM0105-7-25L	100–500	25	7.5	24	+53.5	389E-01/1
PAM0105-6-50L	100–500	50	7	24	+56.5	389D-01/1

UHF BAND — Class A

Device	Frequency MHz	P_o Min Watts	Gain Typ dB	V_{CC} Volts	3rd Order Intercept Typ dBm	Package/ Style
PAM0510-25-6L	500–1000	6	27	24	48.5	389C-01/1
PAM0810-24-5LA	800–1000	5	26	28	+47.5	389C-01/1
PAM0810-8-10LA	800–1000	10	10	28	+50	389E-01/1
PAM0810-7-25LA	800–1000	25	8	28	+55	389E-01/1
PAM0810-6-50LA	800–1000	50	7	28	+56.5	389D-01/1

(12)Vision Carrier = –8 dB; Sound Carrier = –7 dB; Sideband Carrier = –16 dB
(13)Output power at 1 dB compression, in Class AB
(24)Vision Carrier = –8 dB; Sound Carrier = –10 dB; Sideband Carrier = –16 dB
(25)Composite Triple Beat in dB, Tones: –8, –11 and –16 dB

Devices listed in bold, italic are Motorola preferred devices.

PAA Series — Ultra Linear Integrated Amplifier Assemblies

PAA and PAE integrated assemblies are class A amplifiers with internal power supply. Available in either 115 Vac or 220 Vac operation. They provide high-gain, excellent linearity and can withstand any load VSWR.

Device	Frequency MHz	P_o Min Watts	Gain Typ dB	V_{AC} Volts	3rd Order Intercept Typ dBm	Package/ Style
WIDE BAND, HIGH POWER — Class A						
PAA1000-42-5L	25–1000	5	42	115	+46.5	389F-01/1
PAE1000-42-5L	25–1000	5	42	220	+46.5	389F-01/1
VHF BAND, HIGH POWER — Class A						
PAA225-42-10L	172–225	10	46	115	–58(25)	389F-01/1
PAE225-42-10L	172–225	10	46	220	–58(25)	389F-01/1
VHF/UHF BAND, HIGH POWER — Class A						
PAA0105-29-6L	100–500	6	31	115	+48.5	389F-01/1
PAA0105-45-25L	100–500	25	47	115	+53	389F-01/1
PAA0105-50-50LAS(40)	100–500	50	52	115	+56.5	389G-01/1
PAE0105-29-6L	100–500	6	31	220	+48.5	389F-01/1
PAE0105-45-25L	100–500	25	47	220	+53	389F-01/1
PAE0105-50-50LAS	100–500	50	52	220	+56.5	389G-01/1
UHF BAND, HIGH POWER — Class A						
PAA0510-25-6L	500–1000	6	27	115	48.5	389F-01/1
PAA0810-24-5L	800–1000	4.5	26	115	+47.5	389F-01/1
PAA0810-38-5LAS	800–1000	4.5	42	115	+47.5	389F-01/1
PAA0810-31-25L	800–1000	25	33	115	+55	389F-01/1
PAA0810-40-50L(40)	800–1000	50	42	115	+56.5	389G-01/1
PAA0810-40-50LAM(26)(40)	800–1000	50	42	115	+56	389G-01/1
PAA0810-54-50LAS(40)	800–1000	50	56	115	+56.5	389G-01/1
PAA0810-54-50LSM(26)(40)	800–1000	50	56	115	+56	389G-01/1
PAA0810-38-100AB(40)	800–1000	100	38	115	—	389G-01/1
PAA0810-38-100AM(26)(40)	800–1000	100	38	115	—	389G-01/1
PAA0810-52-100AB(40)	800–1000	100	52	115	—	389G-01/1
PAA0810-52-100AM(26)(40)	800–1000	100	52	115	—	389G-01/1
PAE0810-24-5L	800–1000	4.5	26	220	+47.5	389F-01/1
PAE0810-38-5LAS	800–1000	4.5	42	220	+47.5	389F-01/1
PAE0810-31-25L	800–1000	25	33	220	+55	389F-01/1
PAE0810-40-50L	800–1000	50	42	220	+56.5	389G-01/1
PAE0810-40-50LAM(26)	800–1000	50	42	220	+56	389G-01/1
PAE0810-54-50LAS	800–1000	50	56	220	+56.5	389G-01/1
PAE0810-54-50LSM(26)	800–1000	50	56	220	+56	389G-01/1
PAE0810-38-100AB	800–1000	100	38	220	—	389G-01/1
PAE0810-52-100AM(26)	800–1000	100	52	220	—	389G-01/1

(25)Composite triple beat in dB. Tones: –8, –11 and –16 dB
(26)Includes directional wattmeter, filter and directional coupler
(40)Available in 19″ rackmount (Case 389T-01/1) by changing prefix to "PAN."

Devices listed in bold, italic are Motorola preferred devices.

RF Amplifiers (continued)

LOW POWER

The following categories describe a wide range of complete amplifier assemblies both hybrid and monolithic for use in CATV distribution systems, instrumentation, communications and military equipment. A variety of power levels and frequencies of operation are offered for many applications.

CATV Distribution

Motorola Hybrids are manufactured using fourth generation technology which has set new standards for CATV system performance and reliability. These hybrids have been optimized to provide premium performance in all CATV systems up to 77 channels.

HYBRIDS UP TO 60 CHANNELS AND 450 MHz

Device	Hybrid Gain (Nominal) dB	Channel Loading Capacity	Maximum Distortion Specifications				Noise Figure @ 450 MHz dB		Package/Style
			Output Level dBmV	2nd Order Test(28) dB	Composite Triple Beat dB	Cross Modulation dB			
					60 CH	60 CH	Max	Typ	
MHW5122A	12	60	+46	−72	−58	−61	8	7	714-04/1
MHW5141A	14	60	+46	−72	−56	−59	7	—	714-04/1
MHW5142A	14	60	+46	−74	−61	−62	7	6	714-04/1
MHW5171A	17	60	+46	−72	−58	−59	7	—	714-04/1
MHW5172A(36)	17	60	+46	−74	−60	−62	7	6	714-04/1
MHW5181A(36)	18	60	+46	−72	−57	−56	6.5	5.5	714-04/1
MHW5182A(36)	18	60	+46	−72	−61	−59	6.5	5.5	714-04/1
MHW5183 ★	18	60	+46	−62(3)	−60	−58	5	4.5	714-04/1
MHW5222A(36)	22	60	+46	−72	−60	−59	5	4.5	714-04/1
MHW5272A	27	60	+46	−72	−59	−60	6	—	714-04/1
MHW5342A	34	60	+46	−72	−59	−59	6	5	714-04/1
MHW5382A	38	60	+46	−70	−59	−59	5	4	714-04/1
CA7901	21	60	+46	−61	−58	−60	—	5.6	714F-01/1

(3)Composite 2nd order; V_{out} = +46 dBmV/ch.
(28)Channels 2 and M13 @ M22
(36)Available in reverse voltage (−24 V) version (in Case 714C-04) by placing Suffix "R" after device number.
★ New Product

Devices listed in bold, italic are Motorola preferred devices.

HYBRIDS UP TO 77 CHANNELS AND 550 MHz(14)

Device	Hybrid Gain (Nominal) dB	Channel Loading Capacity	Maximum Distortion Specifications: Output Level dBmV	2nd Order Test(29) dB	Composite Triple Beat dB 77 CH	Cross Modulation dB 77 CH	Noise Figure @ 550 MHz dB Max	Typ	Package/Style
MHW6122	12	77	+44	−74	−56	−62	8.5	7	714-04/1
MHW6141	14	77	+44	−72	−56	−59	7.5		714-04/1
MHW6142	14	77	+44	−72	−59	−62	7.5		714-04/1
MHW6171	17	77	+44	−68	−56	−59	7		714-04/1
MHW6172	17	77	+44	−70	−59	−62	7		714-04/1
MHW6181	18	77	+44	−70	−56	−59	7		714-04/1
MHW6182	18	77	+44	−72	−58	−62	7		714-04/1
MHW6183★	18	77	+44	−58(23)	−58	−58	5.5	5	714-04/1
MHW6222	22	77	+44	−66	−57	−57	6		714-04/1
MHW6272	27	77	+44	−64	−57	−57	6.5	6	714-04/1
MHW6342	34	77	+44	−64	−57	−57	6.5	5.5	714-04/1

HYBRIDS UP TO 860 MHz

Device	Gain dB	Frequency MHz	V_{CC} Volts	2nd Order IMD dB @ V_{out} = 50 dBmV/ch	Composite Triple Beat dB @ V_{out} /Freq. (dBmV/MHz)	DIN45004B dBmV @ Freq. (MHz)	NF @860 MHz dB Max	Package/Style
CA901	17	40–860	24	−60	—	120 (860)	9	714P-01/2
CA902★	17	40–860	28	−63	—	123	9.5	714P-01/2
CA912★	17	40–860	15	−63	—	123	9.5	714P-01/3

REVERSE AMPLIFIER HYBRIDS

Device	Hybrid Gain (Nominal) dB	Channel Loading Capacity	Maximum Distortion Specifications: Output Level dBmV	2nd Order Test dB (30)	Composite Triple Beat dB 12 CH	22 CH	26 CH	Cross Modulation dB 12 CH	22 CH	26 CH	Noise Figure @ 175 MHz dB Max	Package/Style
MHW1134	13	22	+50	−72	—	−73	−71(16)	—	−65	−65(16)	7	714-04/1
MHW1184(36)	18	22	+50	−72	—	−72	−70(16)	—	−64	−64(16)	5.5	714-04/1
MHW1224	22	22	+50	−72	—	−71	−68(16)	—	−62	−62(16)	5.5	714-04/1
MHW1244	24	22	+50	−72	—	−70	−68(16)	—	−61	−61(16)	5	714-04/1

(14)Extended frequency versions available upon request. Please consult factory.
(16)Typical
(23)Composite 2nd order; V_{out} = +44 dBmV/ch.
(29)Channels 2 and M30 @ M39
(30)Channels 2 and A @ 7
(36)Available in reverse voltage (−24 V) version (in Case 714C-04) by placing Suffix "R" after device number.
★ New Product

Devices listed in bold, italic are Motorola preferred devices.

RF Amplifiers — Low Power (continued)

450/550 MHz POWER DOUBLING HYBRIDS

Device	Hybrid Gain (Nominal) dB	Channel Loading Capacity	Maximum Distortion Specifications						Noise Figure @ 450/550 MHz dB		Package/ Style
			Output Level dBmV	2nd Order Test dB	Composite Triple Beat dB		Cross Modulation dB				
					60 CH	77 CH	60 CH	77 CH	Max	Typ	
MHW5185[36]	18	60	+46	−74[28]	−65	—	−66	—	7	—	714-04/1
MHW6185[36]	18	77	+44	−71[29]	—	−63	—	−63	7.5	—	714-04/1
MHW5205[36]★	20	60	+46	−58[41]	−64	—	−64	—	6.5	5.5	714-04/1
MHW5225[36]★	22	60	+46	−69[28]	−62	—	−60	—	6	5	714-04/1

450/550/600 MHz FEEDFORWARD HYBRIDS

Device	Hybrid Gain (Nominal) dB	Channel Loading Capacity	Maximum Distortion Specifications								Noise Figure @ 450/550/ 600 MHz dB		Package/ Style
			Output Level dBmV	2nd Order Test dB	Composite Triple Beat dB			Cross Modulation dB					
					60 CH	77 CH	85 CH	60 CH	77 CH	85 CH	Max	Typ	
MFF124	24	60	+46	−84	−79	—	—	−75	—	—	10	—	825-03/1
MFF124B	24	60	+46	−84	−79	—	—	−75	—	—	10	—	825A-02/1
MFF7124[1]	24	60	+52.5[37]	—	−69	—	—	−66	—	—	10	—	825-03/1
MFF7124B★	24	60	+52.5[37]	—	−69	—	—	−66	—	—	10	—	825A-02/1
MFF224	24	77	+44	−86	—	−75	—	—	−70	—	11	—	825-03/1
MFF224B	24	77	+44	−86	—	−75	—	—	−70	—	11	—	825A-02/1
MFF324[1]	24	85	+44	−86	—	—	−73	—	—	−66	12.5	—	825-03/1
MFF324B[1]	24	85	+44	−86	—	—	−73	—	—	−66	12.5	—	825A-02/1

General Purpose Wideband

A wide range of hybrid and silicon monolithic amplifiers are offered for low level signal amplification. Package type, gain, frequency of operation, output level and supply voltage combinations can be selected to fit the design engineer's specific requirements.

50 Ω HYBRIDS (Case 31A-03/2)

The MWA Series features excellent gain versus frequency flatness, temperature stability and are cascadable for high gain lineups. Construction techniques include thin film gold metal circuitry and hermetic TO-205AD package. MWA devices processed similarly to MIL-S-883, Method 5004.4, Class B, are available to special order.

Device	Frequency Range MHz	Gain dB Min/Typ	Supply Voltage Vdc	Output Level 1 dB Compression dBm	Noise Figure @ 250 MHz dB
MWA110	0.1–400	13/14	2.9	−2.5	4
MWA120	0.1–400	13/14	5	+8.2	5.5
MWA130	0.1–400	13/14	5.5	+18	7
MWA131[1]	0–400	13/14	5.5	+20	5[39]
MWA210	0.1–600	9/10	1.75	+1.5	6
MWA220	0.1–600	9/10	3.2	+10.5	6.5
MWA230	0.1–600	9/10	4.4	+18.5	7.5
MWA310	0.1–1000	7/8	1.6	+3.5	6.5
MWA320	0.1–1000	7/8	2.9	+11.5	6.7
MWA330	0.1–1000	—/6.2	4	+15.2	9

(1) To be introduced
(28) Channels 2 and M13 @ M22
(29) Channels 2 and M30 @ M39
(36) Available in reverse voltage (−24 V) version (in Case 714C-04) by placing Suffix "R" after device number.
(37) Output level is characterized with 9.0 dB uptilt
(39) NF @ f = 400 MHz
(41) Composite 2nd order IMD, 60 channel flat.
★ New Product

Devices listed in bold, italic are Motorola preferred devices.

50 Ω–75 Ω HYBRIDS (Case 790-01/1)

The Case 790-01 amplifiers feature high gain with low noise, low input and output VSWR and excellent gain flatness to 1 GHz. Three amplifier stages are constructed using SOT-23 packaged devices mounted on thick film circuit substrates.

Device	Frequency Range MHz	Gain dB Min/Typ	Supply Voltage Vdc	Output Level 1 dB Compression dBm	Noise Figure @ 250 MHz dB
MHW595	30–890	22/24	10–14	+6	5
MHW596	30–890	25/27	18–22	+6	4

50 Ω–100 Ω HYBRIDS (Case 714-04/1)

The general purpose hybrid amplifiers listed are for broadband system applications requiring superior gain and current stability with temperature. The 50 to 100 ohm input and output impedances help simplify designs.

Device	Frequency Range MHz	Gain dB Min/Typ	Supply Voltage Vdc	Output Level 1 dB Compression mW/f (MHz)	Noise Figure @ 250 MHz dB
MHW591	1–250	34.5/36.5	13.6	700/100	5
MHW593	10–400	33/34.5	13.6	600/200	5
MHW590	10–400	31.5/34	24	800/200	5
MHW592	1–250	33.5/35	24	900/100	5

50 Ω MONOLITHIC

These monolithic amplifiers are fully cascadable and usable to frequencies over 3 GHz. External blocking capacitors are required along with an external bias resistor. Hermetic versions are available to special order in Case 303-01.

Device	Frequency Range MHz	Gain dB Typ @ 1 GHz	Recommended Operating Current mA	Output Level 1 dB Compression dBm Typ	Noise Figure @ 1500 MHz dB
Case 317-01/3					
MWA0204	DC-3000	11.5	25	7	6
MWA0304	DC-3000	11.5	35	12	6
Case 318A-05/4					
MWA0211L	DC-3000	11.5	25	7	6
MWA0311L	DC-3000	11.5	35	12	6
Case 303A-01/3					
MWA0270	DC-3000	12	25	7	6
MWA0370	DC-3000	12	35	12	6

Devices listed in bold, italic are Motorola preferred devices.

RF Amplifiers — Low Power (continued)

STANDARD LINEAR HYBRIDS

The CA series of RF linear hybrid amplifiers consists of a family of medium power, broadband gain blocks in the CATV industry standard "CA" package. These amplifiers were designed for multi-purpose RF applications where linearity, dynamic range and wide bandwidth are of primary concern. Each amplifier is available in various package options. For hermetic package option add suffix "H" to part number except where noted (32). Four parts are available as indicated in a low profile package. Hermetic package parts are in Case 826-01/1 (for positive supply) or 826-01/2 (for negative supply).

Device	BW MHz	Gain Flatness ±dB Typ	Gain/Freq. dB/MHz Typ	P_{1dB} dBm Typ	NF/Freq. dB/MHz Typ	3rd Order Intercept Point/Freq. dBm/MHz Typ	VSWR Max 50 Ω/75Ω	V_S/I_S V/mA Typ	Case/ Style
CA2810C	10–350	1.5	33/50	29	8/300	43/300	2/1.3	24/300	714F-01/1
CA2813C	40–300	1.25	34/50	22	5/300	40/300	2/1.3	15/160	714F-01/1
CA2818C	10–400	1	18.5/50	30	5/200	45/200	2/—	24/205	714F-01/1
CA2830C	5–200	1	34.5/100	29	4.7/200	46/200	2/—	24/300	714F-01/1
CA2832C	1–200	1	35.5/100	33	6/200	47/200	2/—	28/435	714F-01/1
CA2833C	5–200	1	34.5/100	29	4.7/200	46/200	2/—	24/300	714G-01/1
CA2842C	30–300	1	22/100	30	5/100	46/300	1.5/—	24/230	714F-01/1
CA2850CR	40–100	0.2	17.5/100	25	4.5/70	40/70	1.3/—	–19/125	714H-01/1
CA2870C	20–400	1	34/100	27	7.5/400	45/300	2/—	24/300	714M-01/1
CA2875CR	40–100	0.2	17.5/100	26	4.5/70	43/70	—/1.07	–19/155	714H-01/1
CA4800C(31)★	10–1000	0.5	17/100	26	7.5/1000	38/1000	2.5/—	24/220	714P-01/2
CA4812C(31)★	10–1000	0.5	17/100	26	7.5/1000	38/1000	2.5/—	12/380	714P-01/3
CA4815C(31)★	10–1000	0.5	17/100	26	7.5/1000	38/1000	2.5/—	15/380	714P-01/3
CA4900(31)★	10–1200	0.5	17	26	7.5/1200	38	2.5/—	220	714P-01/2
CA4912(31)★	10–1200	0.5	17	26	7.5/1200	38	2.5/—	380	714P-01/3
CA4915(31)★	10–1200	0.5	17	26	7.5/1200	38	2.5/—	380	714P-01/3
CA5800C(31)★	10–1000	0.5	15/100	29	8.5/1000	40.5/1000	2.5/—	28/400	714P-01/2
CA5815C(31)★	10–1000	0.5	15/100	29	8/1000	40.5/1000	2.5/—	15/700	714P-01/3
CA5900	10–1200	0.5	15/100	30	8.5/1200	41/1200	2.6/—	26/400	714P-01/2
CA5915	10–1200	0.5	15/100	30	8.5/1200	41/1200	2.6/—	15/700	714P-01/3

(31)Available in thin flange package (Case 714T-01) by adding suffix "S" to part number, i.e., CA4800CS

★ New Product

Devices listed in bold, italic are Motorola preferred devices.

SHP and DHP Linear

The SHP and DHP series of linear amplifiers consist of medium power, broadband, high gain amplifiers operating from 15 to 28 volt supplies. Both their wide dynamic and frequency ranges make them suitable for use in instrumentation, communications and military equipments.

SHP (Case 389A-01/1)

Device	BW MHz	Gain (dB) (Typ)	VSWR 50 Ohms (Max)	DC Power (Typ)	1 dB Compression W (Typ) @ MHz	Third Order Intercept dBm (Typ) @ MHz	Noise Figure dB (Typ) @ MHz
SHP02-36-20	1–200	36	2:1	28 V/430 mA	2 @ 50 1.5 @ 200	+50 @ 50 +43 @ 200	5 @ 100 6 @ 200
SHP06-18-04	30–550	18	1.5:1	24 V/220 mA	1.2 @ 300 0.8 @ 550	+45 @ 300 +40 @ 550	6 @ 300 7.5 @ 550
SHP05-22-04	30–450	22	1.5:1	24 V/220 mA	1.2 @ 300 0.5 @ 450	+44 @ 300 +39 @ 450	5 @ 300 6 @ 450
SHP05-34-04	30–450	34	1.5:1	24 V/315 mA	1 @ 300 0.4 @ 450	+45 @ 300 +38 @ 450	5 @ 300 6 @ 450
SHP05-18-10	30–500	18	1.5:1	24 V/415 mA	2 @ 300 1 @ 500	+49 @ 300 +42 @ 500	4.5 @ 300 6 @ 500
SHP10-17-04	10–1000	17	2:5	24 V/220 mA	0.4 @ 500 0.4 @ 1000	+40 @ 500 +39 @ 1000	6.5 @ 500 7.5 @ 1000
SHP10-17-04-15	10–1000	17	2:5	15 V/400 mA	0.4 @ 500 0.4 @ 1000	+40 @ 500 +39 @ 1000	6.5 @ 500 7.5 @ 1000
SHP10-15-08	10–1000	15	2:5	28 V/400 mA	0.8 @ 500 0.7 @ 1000	+43 @ 500 +42 @ 1000	7.5 @ 500 8.5 @ 1000
SHP10-15-08-15	10–1000	15	2:5	15 V/700 mA	0.8 @ 500 0.7 @ 1000	+43 @ 500 +42 @ 1000	7.5 @ 500 8.5 @ 1000

DHP (Case 389-01/1)

Device	BW MHz	Gain (dB) (Typ)	VSWR 50 Ohms (Max)	DC Power (Typ)	1 dB Compression W (Typ) @ MHz	Third Order Intercept dBm (Typ) @ MHz	Noise Figure dB (Typ) @ MHz
DHP02-36-40	1–200	36	2:1	28 V/870 mA	4 @ 50 3 @ 200	+53 @ 50 +46 @ 200	5.5 @ 100 6.5 @ 200
DHP05-36-10	30–500	36	1.5:1	24 V/600 mA	2 @ 300 1 @ 500	+49 @ 300 +42 @ 500	5 @ 300 6 @ 500
DHP05-18-20	30–500	18	1.5:1	24 V/830 mA	4 @ 300 2 @ 500	+51 @ 300 +45 @ 500	5 @ 300 6.5 @ 500
DHP10-14-15	10–1000	15	2:5	28 V/800 mA	1.6 @ 500 1.3 @ 1000	+45 @ 500 +44 @ 1000	8 @ 500 9 @ 1000
DHP10-32-08	10–1000	32	2:5	28 V/620 mA	0.8 @ 500 0.7 @ 1000	+43 @ 500 +42 @ 1000	6.5 @ 500 7.5 @ 1000

Devices listed in bold, italic are Motorola preferred devices.

RF Amplifiers — Low Power (continued)

CRT Drivers

These complete hybrid amplifiers are specifically designed for CRT driver applications requiring high frequency response and high voltage, such as high resolution color graphics video monitors. Gold metallized dice and substrates are used to insure high reliability and improved ruggedness.

Device	V_{CC} Volts	Gain(34) V/V	3 dB BW MHz	V_{out} (Max) Volts	Load	Package/Style
CR2424(33)	60	12	145	50 P-P	6 to >20 pF	714G-01/1
CR2424R	−60	12	145	50 P-P	6 to >20 pF	714H-01/1
CR2425(33)	60	12	145	50 P-P	6 to >20 pF	714F-01/1
CR2425R	−60	12	145	50 P-P	6 to >20 pF	714H-01/1
CR3424	80	12	115	40 P-P	6 to >20 pF	714G-01/1
CR3425	80	12	115	40 P-P	6 to >20 pF	714F-01/1
CR3424R	−80	12	115	40 P-P	6 to >20 pF	714H-01/1
CR3425R	−80	12	115	40 P-P	6 to >20 pF	714H-01/1

Carrier Band Module

This module is designed for use in MAP/IEEE 802.4 token bus LAN applications. Surface mount construction results in extremely small size and ruggedness. Modulation used is phase coherent FSK with the low tone being 5 MHz and the high tone 10 MHz.

Device	Signalling Rate mbps	Signal Rise/Fall Times Nanoseconds	Operating Input Level Range dBmV	Bit Error Rate	Package/Style
MHW11005	5	15−35	10−66	$\leq 10^{-9}$	817A-01/1

(33)Text fixtures available. To order add "TF" suffix to device number
(34)Insertion gain; 50 ohm source

RF Chips

Ordering and Shipping Information

Minimum Order Requirements

In conjunction with Motorola corporate policy the minimum order, release or line/line shipment of standard product is $200.

The minimum order, release or line item shipment of non-standard product is $2500 **unless** otherwise stated at the time of quotation, order entry or acknowledgement.

Packaging:

Multi-Pak — Motorola supplies all discrete semiconductors in the industry standard multi-pak. (Waffle type carrier, Figure 1.) This is a 2 x 2 or 4 x 4 waffle type carrier with a separate hole for each die. Chips are 100% visually inspected with the rejects removed. There is no suffix associated with the multi-pak carrier.

Circle Pak (CP Suffix) (See Figure 2) — The wafer is placed on a sticky film before being sawed. Each wafer is completely sawed through with the back side against the PVC film. The die stick to the PVC film and maintain exact wafer orientation and spacing. This packaging method also offers the convenience of storage with original orientation and spacing even after a portion of the wafer is used. The evacuated plastic bag is thermally sealed holding the contents securely with no die movement. Die can be removed from the sticky film by a sharp ejector-pin pushing a die up and a vacuum needle manually picking it up. This package can also be handled by an automatic die loader with some minor adjustments. To order this package, the suffix CP must appear with the part number.

Wafer Pak (WP Suffix) (See Figure 3) — The pak contains a wafer that is 100% electrically tested. With the rejects inked, the wafer is left unsawed and is packaged with protective cardboard on a vacuum sealed plastic bag. The WP suffix must appear after the chip part number.

Heatspreader (See Figure 4) — Some chips (indicated by footnote in the parts list of available die) are also available mounted with eutectic bonding to copper heatspreaders that have been plated with nickel and gold. The use of heatspreaders increases thermal conductivity and allows solder reflow attachment of the die-heatspreader assembly.

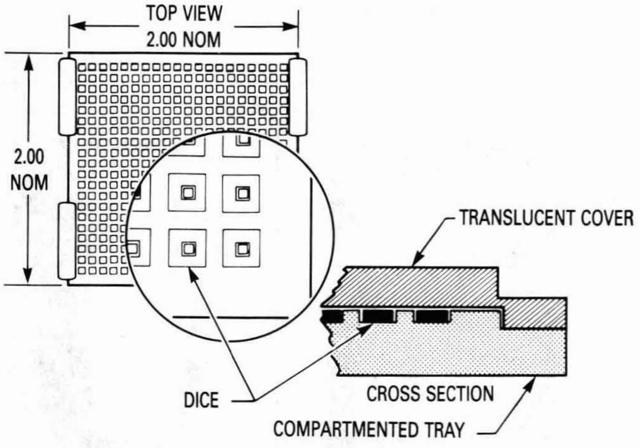

Figure 1. Multi-Pak (No Suffix)

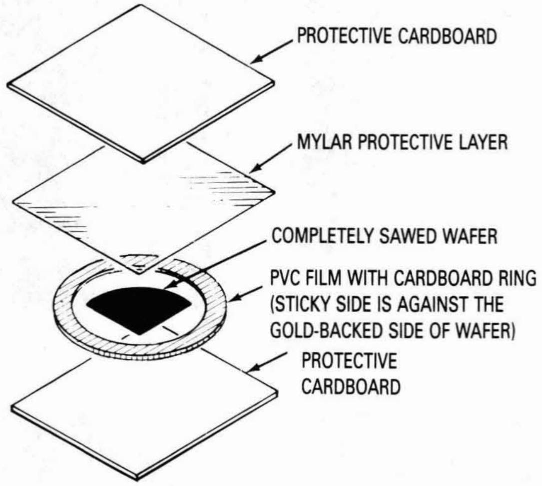

Figure 2. Circle Pak (CP Suffix)

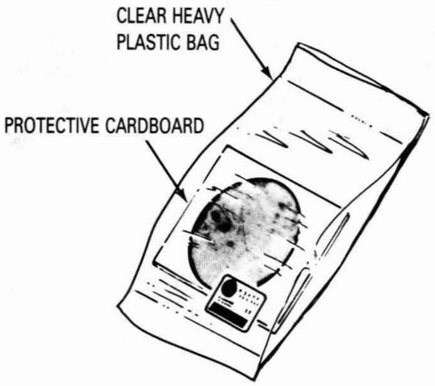

Figure 3. Wafer Pak (WP Suffix)

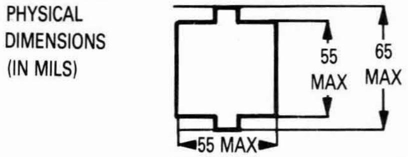

Figure 4. Heatspreader

Die Geometries

1

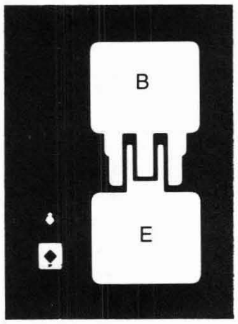

2

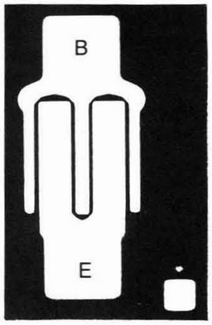

3

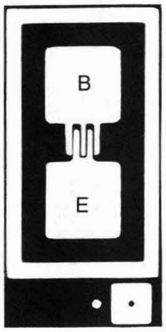

4

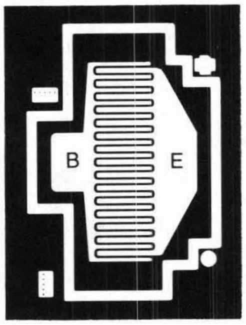

5

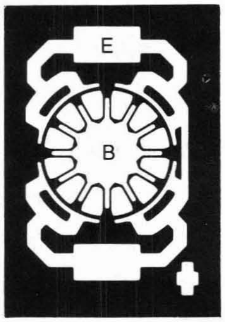

6

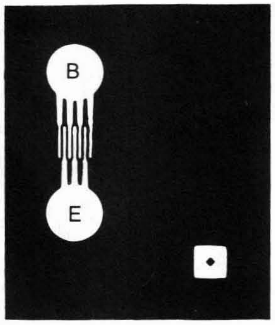

7

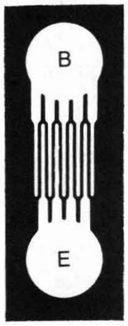

8

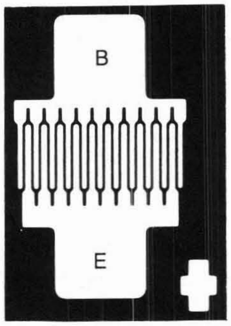

9

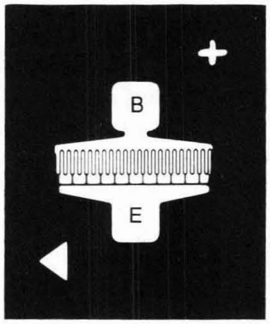

10

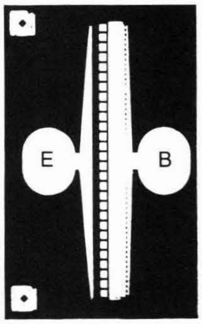

11

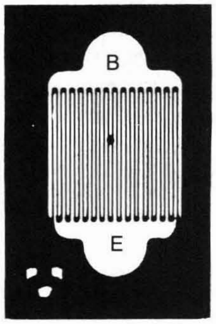

12

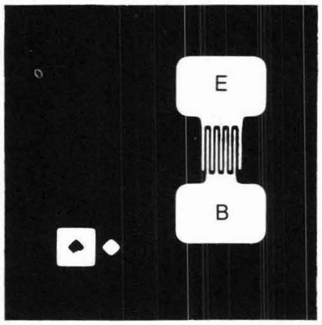

13

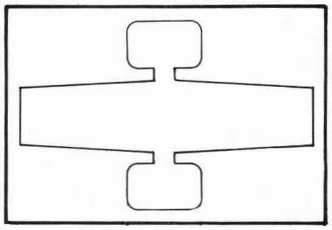

14

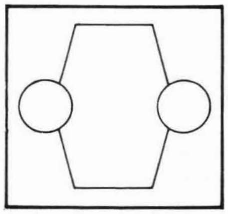

15

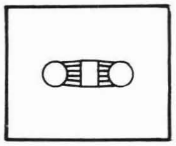

B = Base
E = Emitter

Parts List of Available Die

Standard D.C. Parameters (at 25°C) — $V_{(BR)CBO}$, $V_{(BR)CEO}$, $V_{(BR)EBO}$, h_{FE} (d.c. current gain)
Special Request Parameters — I_{CEO}, I_{CES}, I_{CEX}, I_{EBO}, $V_{CE(sat)}$, f_T, C_{CB}, C_{EB}, h_{FE} (ac), NF (Noise Figure), G_{PE}
Front Metallization Thickness — a minimum of 10,000 Å
Back Metallization Thickness — a minimum of 3,000 Å–24,000 Å

Standard Part #	Chip Part #	Die Geometry Reference #	Die Size inches 1/1000	Die Thickness inches 1/1000	Bond Pad Size		Metallization		Packaging			Heat-spreader
					inches 1/1000 Base	inches 1/1000 Emitter	Front	Back	Multi (none)	Wafer (WP)	Circle (CP)	
2N2857	2C2857	1	14x16	4–8	4.0x4.8	4.0x4.8	Al	Au	*	*	*	
2N3866	2C3866	2	15x22	4–8	4x4	4x4	Al	Au	*	*	*	
2N4957	2C4957	3	12x22	4–8	4x4	4x4	Al	Au	*	*	*	
2N5108	2C5108	11	12x17	4–8	2.5x2.1	2.5x2.1	Au	Au	*	*	*	
2N5160	2C5160	4	15x20	4–8	2.2x3.2	2.2x3.2	Al	Au	*	*	*	
2N5583	2C5583	4	15x20	4–8	2.2x3.2	2.2x3.2	Au	Au	*	*	*	
2N5943	2C5943	2	15x22	4–8	4x4	4x4	Al	Au	*	*	*	
BFR90	BFRC90	6	14x16	4–8	2.8 dia.	2.8 dia.	Au	Au	*	*	*	
BFR91	BFRC91	7	14x16	4–8	2.8 dia.	2.8 dia.	Au	Au	*	*	*	
BFR96	BFRC96	8	13x16	4–8	3.4x3.4	3.4x3.4	Au	Au	*	*	*	
MM4049	MMC4049	3	12x22	4–8	4x4	4x4	Al	Au	*	*	*	
MRF2369	MRFC2369	9	15x16	4–8	2.2x2.2	2.2x2.2	Au	Au	*	*	*	
MRF559	MRFC559	5	15x24	4–8	3.5 dia.	2.16x4	Au	Au	*	*	*	
MRF544	MRFC544	10	34x27	4–8	3x4	3x4	Au	Au	*	*	*	
MRF545	MRFC545	10	34x27	4–8	3x4	3x4	Au	Au	*	*	*	
MRF901	MRFC901	12	15x15	4–8	4.0x2.6	4.0x2.6	Au	Au	*	*	*	
MRF904	MRFC904	12	15x15	4–8	4.0x2.6	4.0x2.6	Au	Au	*	*	*	

Samples available upon request. Contact the Motorola Sales Office.

*Available Packaging

Storage and Handling Information

It is recommended that all Motorola die be stored at room temperature in an inert environment after removal of the seal from the original shipping package.

Special Electro-Static Discharge (ESD) precautions should be taken to avoid damaging the chips. Motorola recommends storage in the original ESD shipping package.

Primary TO-220 Leadform Dimensions

- Leadform options require assignment of a special part number before ordering.
- Contact your local Motorola representative for special part number and pricing.
- 10,000 piece minimum quantity orders are required.
- Leadform orders are non-cancellable after processing.
- Leadforms apply to both Motorola Case 221A-04 and 221A-06 except as noted.

LEADFORM AS

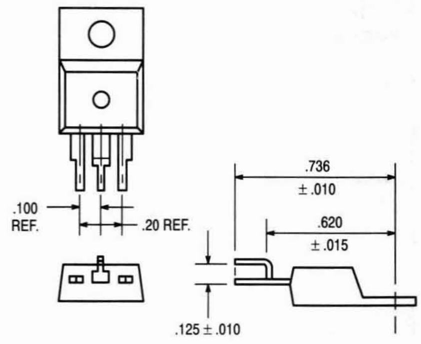

LEADFORM BC

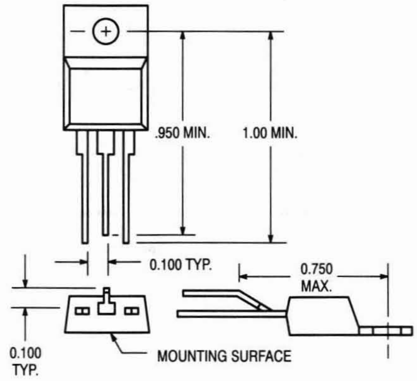

LEADFORM AC

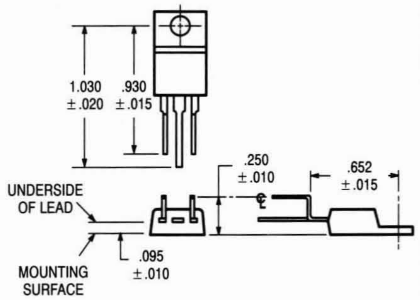

LEADFORM AD

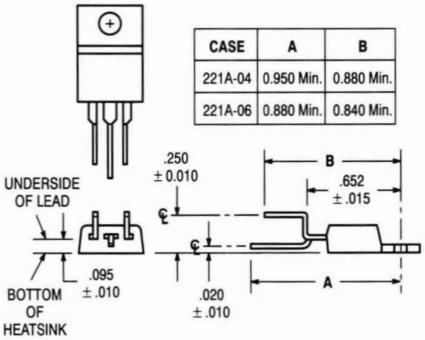

CASE	A	B
221A-04	0.950 Min.	0.880 Min.
221A-06	0.880 Min.	0.840 Min.

LEADFORM AN

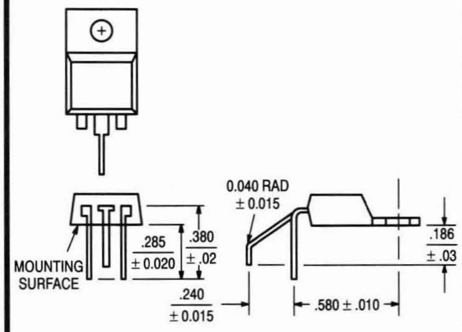

LEADFORM BA

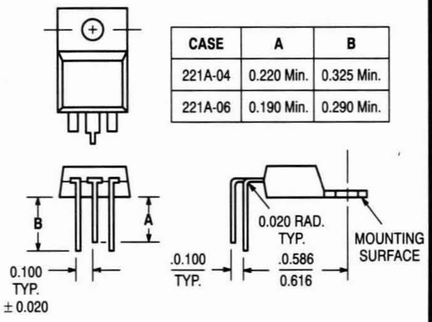

CASE	A	B
221A-04	0.220 Min.	0.325 Min.
221A-06	0.190 Min.	0.290 Min.

LEADFORM BL

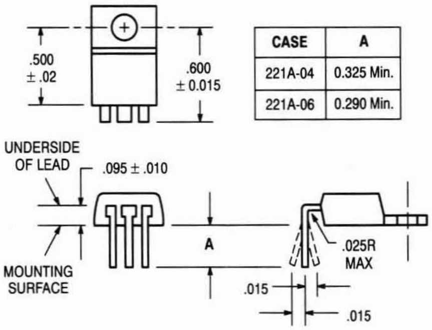

CASE	A
221A-04	0.325 Min.
221A-06	0.290 Min.

LEADFORM AK

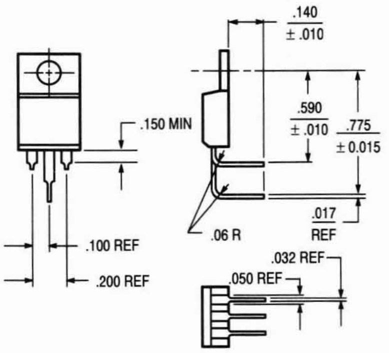

LEADFORM AF

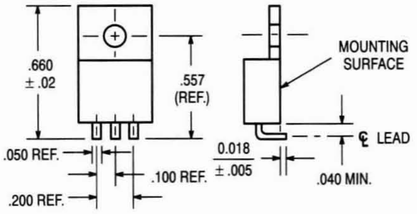

Primary TO-220 Leadform Dimensions (continued)

LEADFORM BS

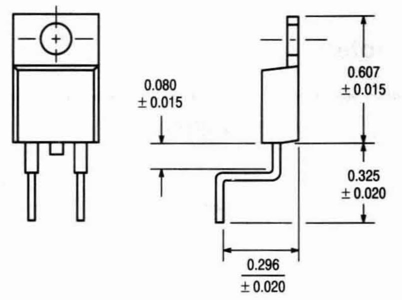

LEADFORM BR

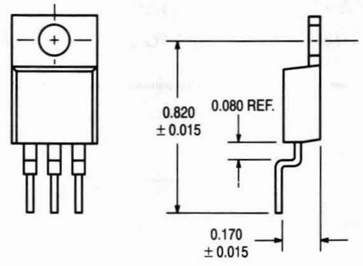

LEADFORM AU

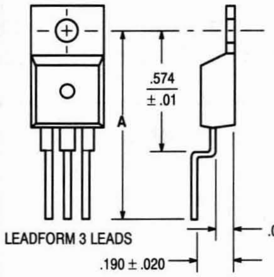

CASE	A
221A-04	0.920 Min.
221A-06	0.885 Min.

LEADFORM BU

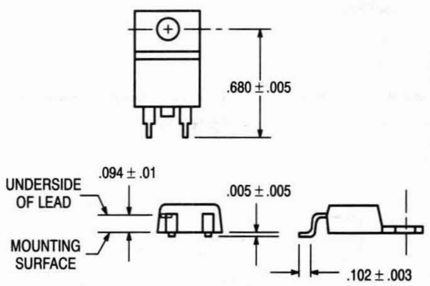

LEADFORM BV

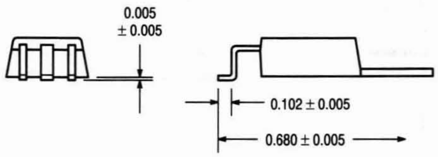

LEADFORM BD

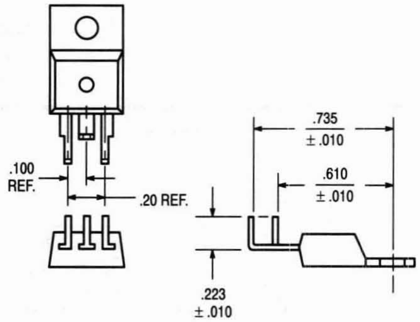

LEADFORM DW

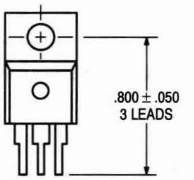

LEADFORM BG

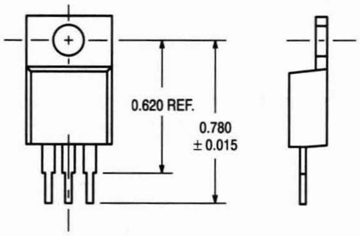

LEADFORM AJ

CASE	A
221A-04	0.360 ± 0.010
221A-06	Lead Not Trimmed 0.300 Min.

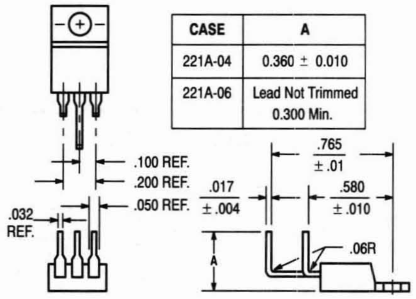

ICePAK Leadform Dimensions

- **Leadform options require assignment of a special part number before ordering.**
- **Contact your local Motorola representative for special part number and pricing.**
- **1350 piece minimum quantity orders are required.**
- **Leadform orders are non-cancellable after processing.**
- **Leadforms apply to Motorola Case 806-05.**

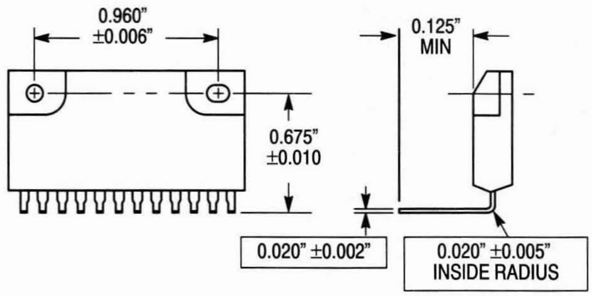

Leadform A

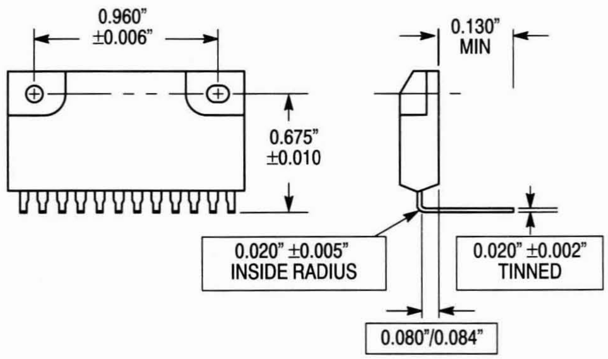

Leadform B

Tape and Reel Specifications and Packaging Specifications

In Brief . . .

Embossed Tape and Reel is used to facilitate automatic pick and place equipment feed requirements. The tape is used as the shipping container for various products and requires a minimum of handling. The antistatic/conductive tape provides a secure cavity for the product when sealed with the "peel-back" cover tape.

- Two Reel Sizes Available (7″ and 13″)
- Used for Automatic Pick and Place Feed Systems
- Minimizes Product Handling
- EIA 481A
- MLL-34, SC-59, SOT-23, SOT-143 in 8 mm Tape
- SO-8, OPTO SO-8, SOT-223, SMB in 12 mm Tape
- DPAK, SO-14, SO-16, SMC in 16 mm Tape
- D^2PAK, 6-Pin Optoisolators in 24 mm Tape

Use the standard device title and add the required suffix as listed in the option table on the following page. Note that the individual reels have a finite number of devices depending on the type of product contained in the tape. Also note the minimum lot size is one full reel for each line item, and orders are required to be in increments of the single reel quantity.

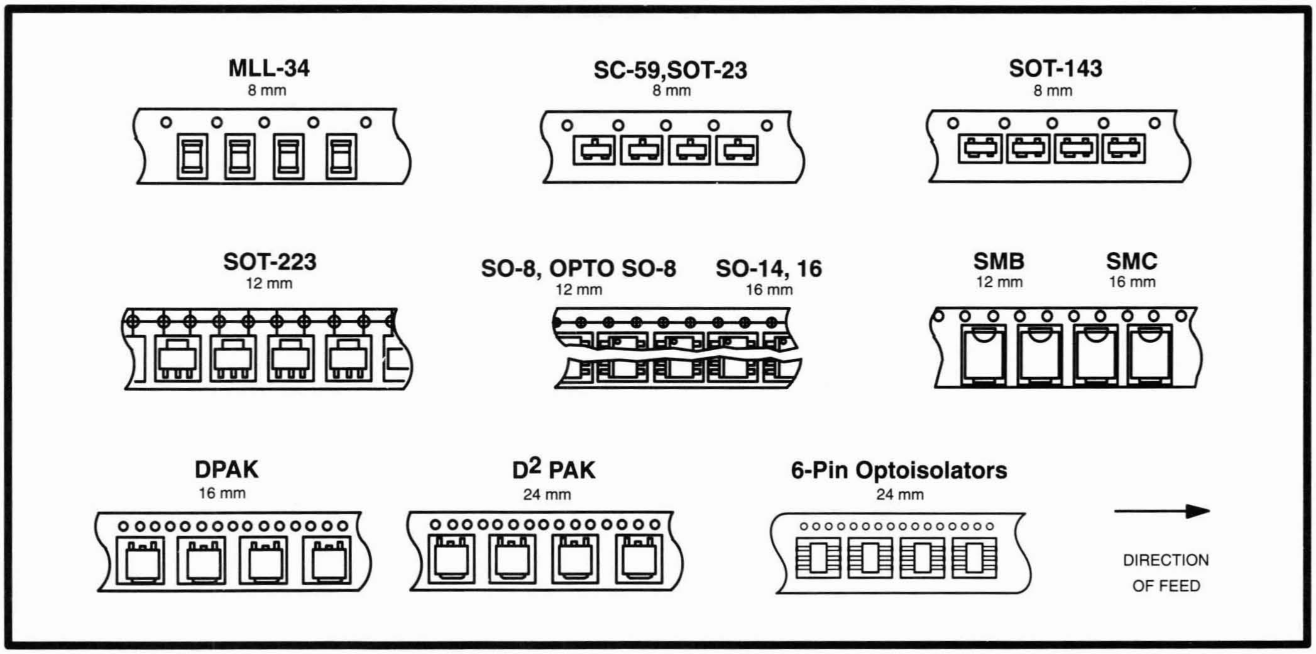

Tape and Reel Specifications (continued)

EMBOSSED TAPE AND REEL ORDERING INFORMATION

Package	Tape Width (mm)	Reel Size (inch)	Devices Per Reel and Minimum Order Quantity	Device Suffix
SOT-23	8 8	7 13	3,000 10,000	T1 T3
SOT-143	8 8	7 13	3,000 10,000	T1 T3
MLL-34	8 8	7 13	2,000 5,000	T1 T3
SOT-223	12 12	7 13	1,000 4,000	T1 T3
SMB	12	13	2,500	T3
SO-8, OPTO SO-8	12 12	7 13	500 2,500	R1 R2
SO-14	16 16	7 13	500 2,500	R1 R2
SO-16	16 16	7 13	500 2,500	R1 R2
DPAK	16	13	2,500	T4
SMC	16	13	2,500	T3
SC-59	8	7	3,000	T1
D^2PAK	24	13	800	T4
6-Pin Optoisolators	24	13	1000	R2

EMBOSSED TAPE AND REEL DATA FOR DISCRETES

CARRIER TAPE SPECIFICATIONS

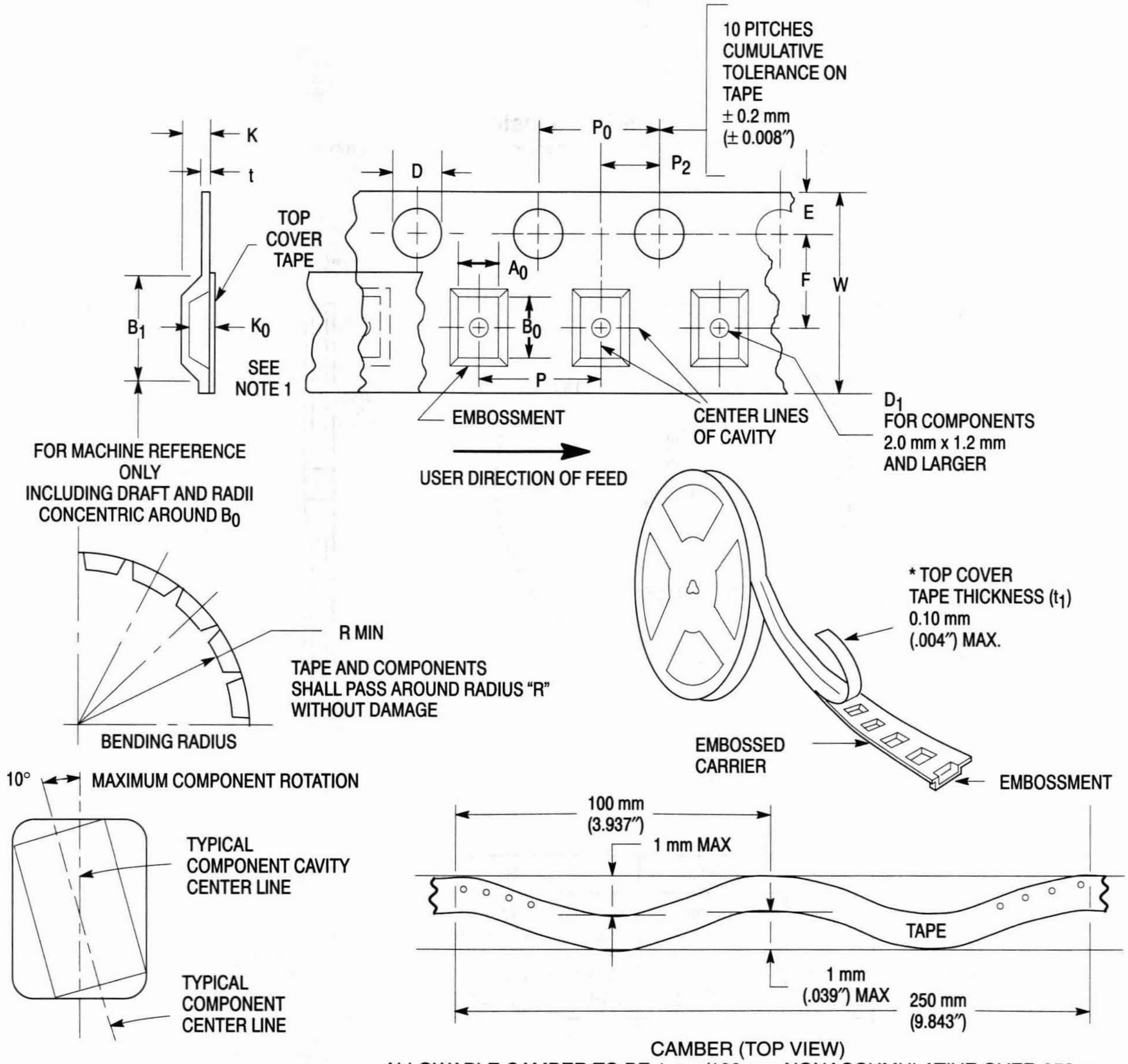

CAMBER (TOP VIEW)
ALLOWABLE CAMBER TO BE 1 mm/100 mm NONACCUMULATIVE OVER 250 mm

DIMENSIONS

Tape Size	B_1 Max	D	D_1	E	F	K	P	P_0	P_2	R Min	T Max	W Max
8 mm	4.55 mm (.179″)	1.5+0.1 mm −0.0 (.059+.004″ −0.0)	1.0 Min (.039″)	1.75±0.1 mm (.069±.004″)	3.5±0.05 mm (.138±.002″)	2.4 mm Max (.094″)	4.0±0.1 mm (.157±.004″)	4.0±0.1 mm (.157±.004″)	2.0±0.1 mm (.079±.002″)	25 mm (.98″)	0.6 mm (.024″)	8.3 mm (.327″)
12 mm	8.2 mm (.323″)		1.5 mm Min (.060″)		5.5±0.05 mm (.217±.002″)	6.4 mm Max (.252″)	4.0±0.1 mm (.157±.004″) 8.0±0.1 mm (.315±.004″)			30 mm (1.18″)		12±.30 mm (.470±.012″)
16 mm	12.1 mm (.476″)				7.5±0.10 mm (.295±.004″)	7.9 mm Max (.311″)	4.0±0.1 mm (.157±.004″) 8.0±0.1 mm (.315±.004″) 12.0±0.1 mm (.472±.004″)					16.3 mm (.642″)
24 mm	20.1 mm (.791″)				11.5±0.1 mm (.453±.004″)	11.9 mm Max (.468″)	16.0±.01 mm (.63±.004″)					24.3 mm (.957″)

Metric dimensions govern — English are in parentheses for reference only.

NOTE 1: A_0, B_0, and K_0 are determined by component size. The clearance between the components and the cavity must be within .05 mm min. to .50 mm max., the component cannot rotate more than 10° within the determined cavity.

Reel Dimensions

Metric Dimensions Govern — English are in parentheses for reference only

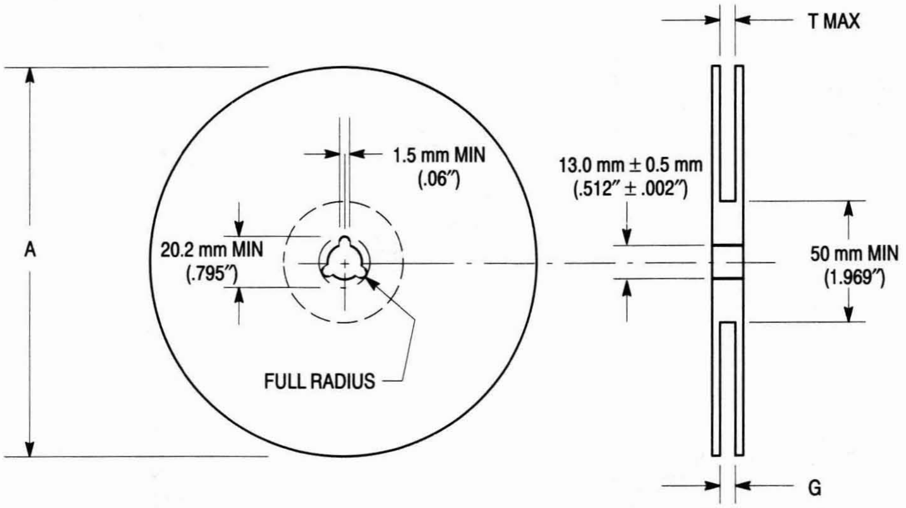

Size	A Max	G	T Max
8 mm	330 mm (12.992″)	8.4 mm + 1.5 mm, −0.0 (.33″ + .059″, −0.00)	14.4 mm (.56″)
12 mm	330 mm (12.992″)	12.4 mm + 2.0 mm, −0.0 (.49″ + .079″, −0.00)	18.4 mm (.72″)
16 mm	360 mm (14.173″)	16.4 mm + 2.0 mm, −0.0 (.646″ + .078″, −0.00)	22.4 mm (.882″)
24 mm	360 mm (14.173″)	24.4 mm + 2.0 mm, −0.0 (.961″ + .070″, −0.00)	30.4 mm (1.197″)

LEAD TAPE PACKAGING STANDARDS FOR AXIAL-LEAD COMPONENTS

Case Type	Product Category	Device Title Suffix	MPQ Quantity Per Reel (Item 3.3.7)	Component Spacing A Dimension	Tape Spacing B Dimension	Reel Dimension C	Reel Dimension D (Max)	Max Off Alignment E
Case 17-02	Surmetic 40 & 600 Watt TVS	RL	4000	0.2 +/– 0.015	2.062 +/– 0.059	3	14	0.047
Case 41A-02	1500 Watt TVS	RL4	1500	0.4 +/– 0.02	2.062 +/– 0.059	3	14	0.047
Case 51-02	DO-7 Glass (For Reference only)	RL	3000	0.2 +/– 0.02	2.062 +/– 0.059	3	14	0.047
Case 59-03	DO-41 Glass & DO-41 Surmetic 30	RL	6000	0.2 +/– 0.015	2.062 +/– 0.059	3	14	0.047
	Rectifier							
Case 59-04	500 Watt TVS	RL	5000	0.2 +/– 0.02	2.062 +/– 0.059	3	14	0.047
	Rectifier							
Case 194-04	110 Amp TVS (Automotive)	RL	800	0.4 +/– 0.02	1.875 +/– 0.059	3	14	0.047
	Rectifier							
Case 267-02	Rectifier	RL	1500	0.4 +/– 0.02	2.062 +/– 0.059	3	14	0.047
Case 299-02	DO-35 Glass	RL	5000	0.2 +/– 0.02	2.062 +/– 0.059	3	14	0.047

Table 1. Packaging Details (all dimensions in inches)

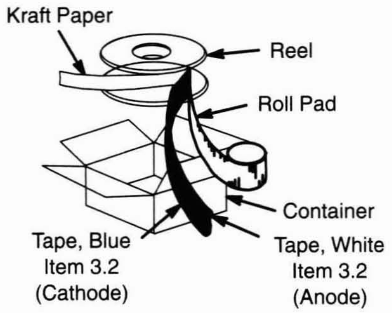

Figure 1. Reel Packing

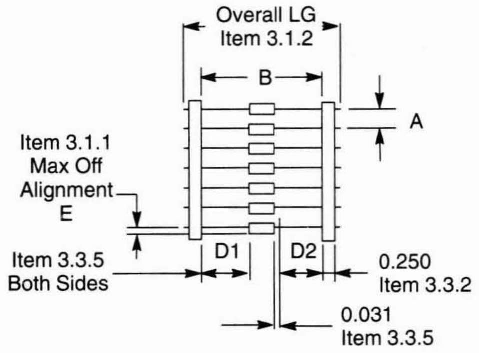

Figure 2. Component Spacing

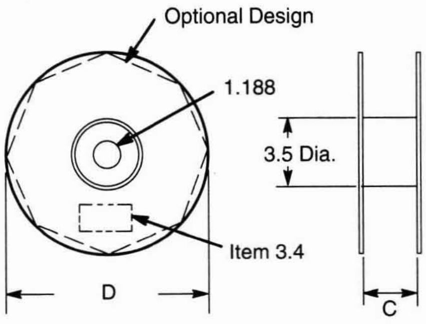

Figure 3. Reel Dimensions

TO-92 EIA, IEC, EIAJ Radial Tape Reel or Ammo Pack

Radial tape reel and ammo pack of the reliable TO-92 package are the best methods of capturing devices for automatic insertion in printed circuit boards. These methods of taping are compatible with various equipment for active and passive component insertion.

- Available on 365 mm Reels
- Available in Ammo Pack (Fan Fold Box)
- Accommodates All Standard Inserters
- Allows Flexible Circuit Board Layout
- 2.5 mm Pin Spacing for Soldering
- EIA-468, IEC 286-2, EIAJ RC1008B

TO-92 RADIAL TAPE REEL OR AMMO PACK

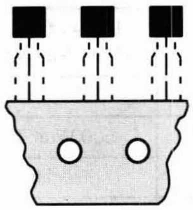

Ordering Notes:

When ordering radial tape on reel or in ammo pack, specify the style per Figures 3 through 8. Add the suffix "RLR" and "Style" to the device title, i.e. MPS3904RLRA. This will be a standard MPS3904 radial taped and supplied on a reel per Figure 3.

Reel Information — Minimum order quantity 1 Reel/$200LL.
Order in increments of 2000.

Ammo Pack Information — Minimum order quantity 1 Box/$200LL.
Order in increments of 2000.

US/European Suffix Conversions

US	EUROPE
RLRA	RL
RLRE	RL1
RLRM	ZL1

TO-92 EIA RADIAL TAPE REEL OR AMMO PACK

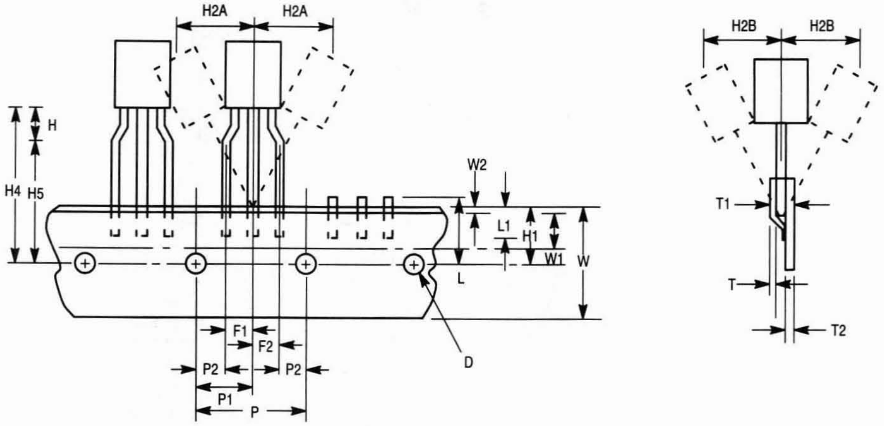

Figure 1. Device Positioning on Tape

Symbol	Item	Specification			
		Inches		Millimeter	
		Min	Max	Min	Max
D	Tape Feedhole Diameter	0.1496	0.1653	3.8	4.2
D2	Component Lead Thickness Dimension	0.015	0.020	0.38	0.51
F1, F2	Component Lead Pitch	0.0945	0.110	2.4	2.8
H	Bottom of Component to Seating Plane	.059	.156	1.5	4.0
H1	Feedhole Location	0.3346	0.3741	8.5	9.5
H2A	Deflection Left or Right	0	0.039	0	1
H2B	Deflection Front or Rear	0	0.051	0	1.3
H4	Feedhole to Bottom of Component	0.7086	0.768	18	19.5
H5	Feedhole to Seating Plane	0.610	0.649	15.5	16.5
L	Defective Unit Clipped Dimension	0.3346	0.433	8.5	11
L1	Lead Wire Enclosure	0.09842	—	2.5	—
P	Feedhole Pitch	0.4921	0.5079	12.5	12.9
P1	Feedhole Center to Center Lead	0.2342	0.2658	5.95	6.75
P2	First Lead Spacing Dimension	0.1397	0.1556	3.55	3.95
T	Adhesive Tape Thickness	0.06	0.08	0.15	0.20
T1	Overall Taped Package Thickness	—	0.0567	—	1.44
T2	Carrier Strip Thickness	0.014	0.027	0.35	0.65
W	Carrier Strip Width	0.6889	0.7481	17.5	19
W1	Adhesive Tape Width	0.2165	0.2841	5.5	6.3
W2	Adhesive Tape Position	.0059	0.01968	.15	0.5

NOTES:

1. Maximum alignment deviation between leads not to be greater than 0.2 mm.
2. Defective components shall be clipped from the carrier tape such that the remaining protrusion (L) does not exceed a maximum of 11 mm.
3. Component lead to tape adhesion must meet the pull test requirements established in Figures 10, 11 and 12.
4. Maximum non-cumulative variation between tape feed holes shall not exceed 1 mm in 20 pitches.
5. Holddown tape not to extend beyond the edge(s) of carrier tape and there shall be no exposure of adhesive.
6. No more than 1 consecutive missing component is permitted.
7. A tape trailer and leader, having at least three feed holes is required before the first and after the last component.
8. Splices will not interfere with the sprocket feed holes.

TO-92 EIA RADIAL TAPE REEL OR AMMO PACK

REEL STYLES

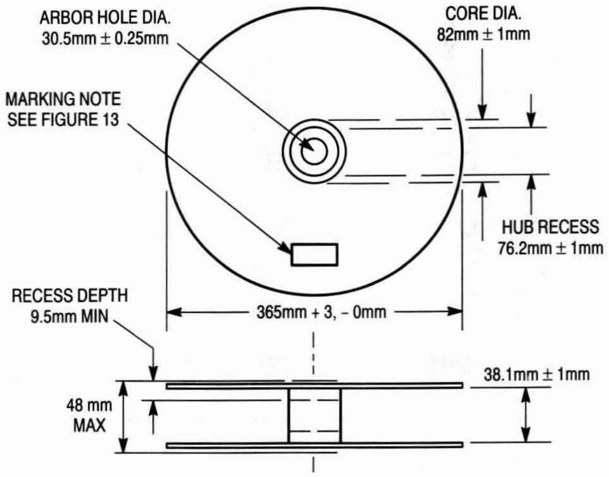

Material used must not cause deterioration of components or degrade lead solderability

Figure 2. Reel Specifications

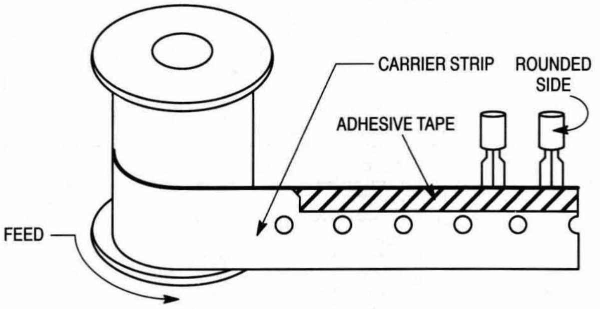

Rounded side of transistor and adhesive tape visible.

Figure 3. Style A

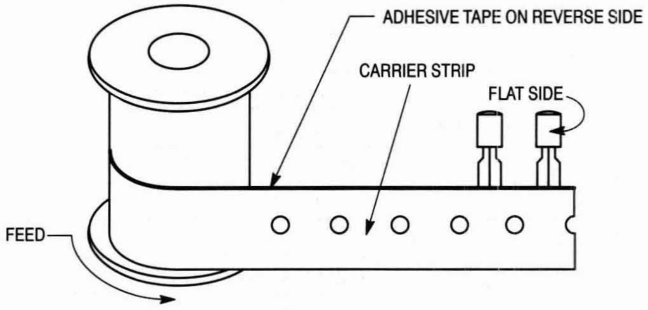

Flat side of transistor and carrier strip visible
(adhesive tape on reverse side).

Figure 4. Style B

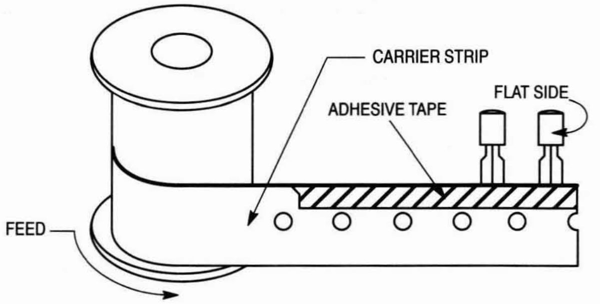

Flat side of transistor and adhesive tape visible.

Figure 5. Style E

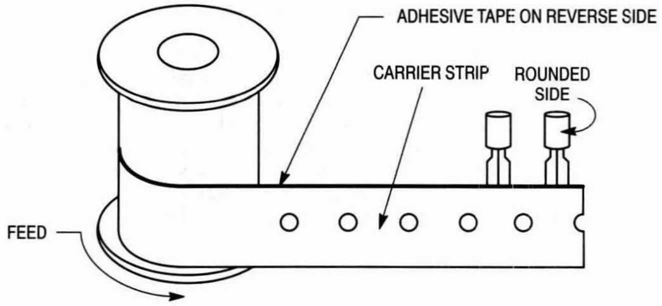

Rounded side of transistor and carrier strip visible
(adhesive tape on reverse side).

Figure 6. Style F

TO-92 EIA RADIAL TAPE REEL OR AMMO PACK

AMMO PACK STYLES

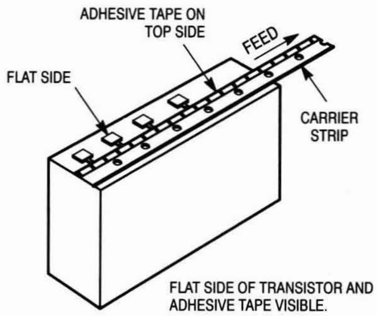

Style M ammo pack is equivalent to styles E and F of reel pack dependent on feed orientation from box.

Figure 7. Style M

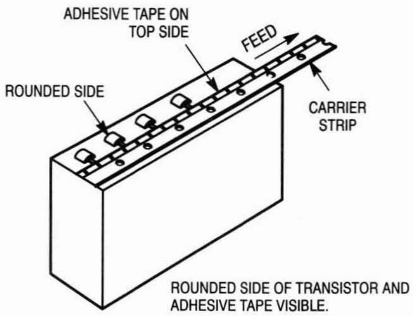

Style P ammo pack is equivalent to styles A and B of reel pack dependent on feed orientation from box.

Figure 8. Style P

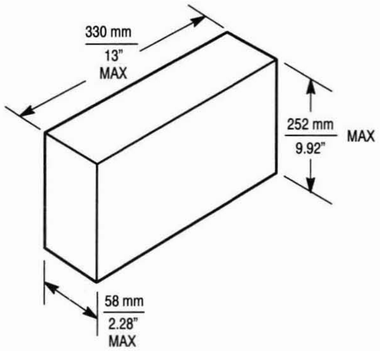

Figure 9. Ammo Pack Dimensions

ADHESION PULL TESTS

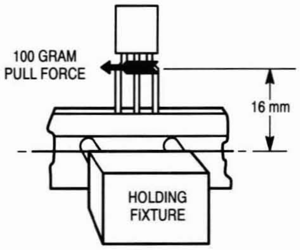

The component shall not pull free with a 300 gram load applied to the leads for 3 ± 1 second.

Figure 10. Test #1

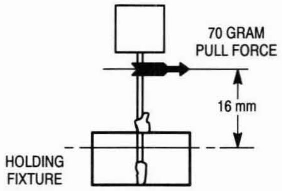

The component shall not pull free with a 70 gram load applied to the leads for 3 ± 1 second.

Figure 11. Test #2

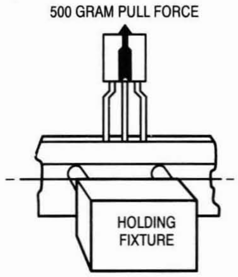

There shall be no deviation in the leads and no component leads shall be pulled free of the tape with a 500 gram load applied to the component body for 3 ± 1 second.

Figure 12. Test #3

Package Outline Dimensions and Footprints

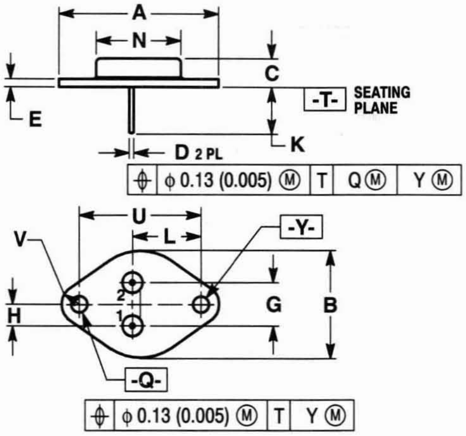

STYLE 1:
PIN 1. BASE
2. EMITTER
CASE: COLLECTOR

STYLE 3:
PIN 1. GATE
2. SOURCE
CASE: DRAIN

STYLE 8:
PIN 1. CATHODE #1
2. CATHODE #2
CASE: ANODE

STYLE 9:
PIN 1. ANODE #1
2. ANODE #2
CASE: CATHODE

NOTES:
1. DIMENSIONING AND TOLERANCING PER ANSI Y14.5M, 1982.
2. CONTROLLING DIMENSION: INCH.
3. ALL RULES AND NOTES ASSOCIATED WITH REFERENCED TO-204AA OUTLINE SHALL APPLY.
4. 001-05 AND -06 OBSOLETE, NEW STANDARD 001-07.

DIM	MILLIMETERS		INCHES	
	MIN	MAX	MIN	MAX
A	39.37 REF		1.550 REF	
B	—	26.67	—	1.050
C	6.35	8.51	0.250	0.335
D	0.97	1.09	0.038	0.043
E	1.40	1.77	0.055	0.070
G	10.92 BSC		0.430 BSC	
H	5.46 BSC		0.215 BSC	
K	11.18	12.19	0.440	0.480
L	16.89 BSC		0.665 BSC	
N	—	21.08	—	0.830
Q	3.84	4.19	0.151	0.165
U	30.15 BSC		1.187 BSC	
V	3.33	4.77	0.131	0.188

CASE 1-07

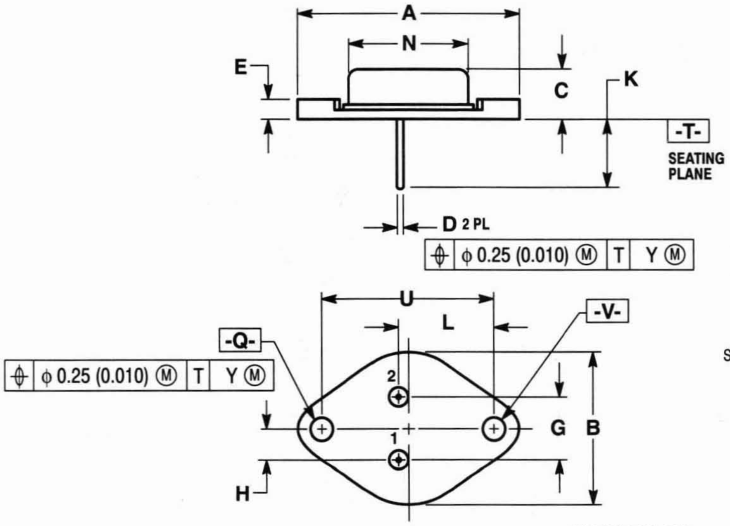

STYLE 4:
PIN 1. ANODE #1
2. ANODE #2
CASE: CATHODE

NOTES:
1. DIMENSIONING AND TOLERANCING PER ANSI Y14.5M, 1982.
2. CONTROLLING DIMENSION: INCH.

DIM	MILLIMETERS		INCHES	
	MIN	MAX	MIN	MAX
A	—	39.37	—	1.550
B	—	26.67	—	1.050
C	6.35	11.43	0.250	0.450
D	0.99	1.09	0.039	0.043
E	—	3.43	—	0.135
G	10.92 BSC		0.430 BSC	
H	5.46 BSC		0.215 BSC	
K	11.18	12.19	0.440	0.480
L	16.89 BSC		0.665 BSC	
N	—	21.08	—	0.830
Q	3.84	4.09	0.151	0.161
U	30.15 BSC		1.187 BSC	
V	3.84	4.09	0.151	0.161

CASE 11-03

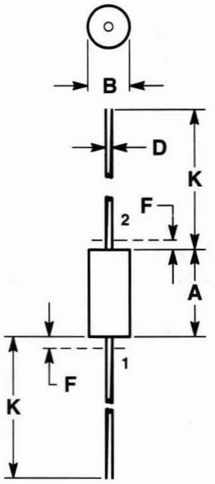

NOTE:
1. LEAD DIAMETER & FINISH NOT CONTROLLED WITHIN DIM "F".

DIM	MILLIMETERS MIN	MILLIMETERS MAX	INCHES MIN	INCHES MAX
A	8.38	8.89	0.330	0.350
B	3.30	3.68	0.130	0.145
D	0.94	1.09	0.037	0.043
F	—	1.27	—	0.050
K	25.40	31.75	1.000	1.250

CASE 17-02

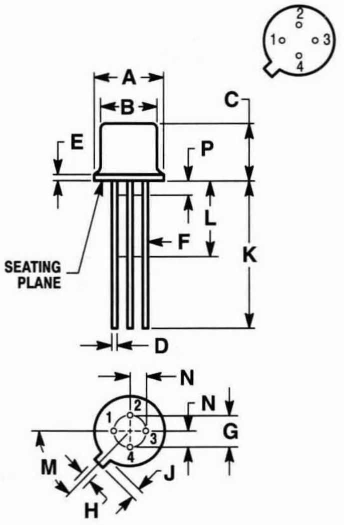

STYLE 10:
PIN 1. EMITTER
2. BASE
3. COLLECTOR
4. CASE

NOTE:
1. ALL RULES AND NOTES ASSOCIATED WITH TO-72 OUTLINE SHALL APPLY.

DIM	MILLIMETERS MIN	MILLIMETERS MAX	INCHES MIN	INCHES MAX
A	5.31	5.84	0.209	0.230
B	4.52	4.95	0.178	0.195
C	4.32	5.33	0.170	0.210
D	0.41	0.53	0.016	0.021
E	—	0.76	—	0.030
F	0.41	0.48	0.016	0.019
G	2.54 BSC		0.100 BSC	
H	0.91	1.17	0.036	0.046
J	0.71	1.22	0.028	0.048
K	12.70	—	0.500	—
L	6.35	—	0.250	—
M	45° BSC		45° BSC	
N	1.27 BSC		0.050 BSC	
P	—	1.27	—	0.050

CASE 20-03

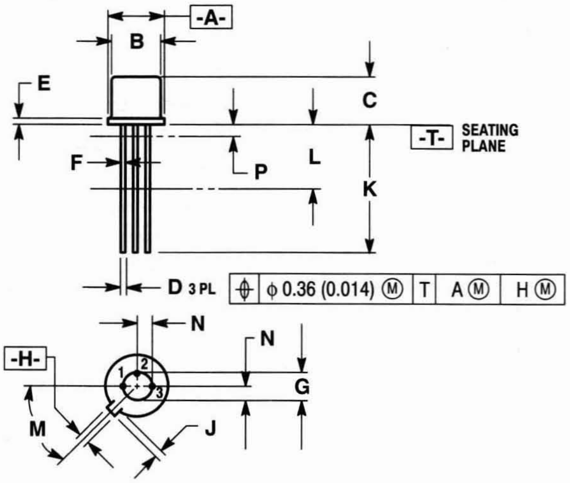

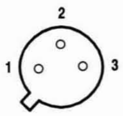

STYLE 1:
PIN 1. EMITTER
2. BASE
3. COLLECTOR

NOTES:
1. DIMENSIONING AND TOLERANCING PER ANSI Y14.5M, 1982.
2. CONTROLLING DIMENSION: INCH.
3. DIM J MEASURED FROM DIM A MAXIMUM.
4. DIM F APPLIES BETWEEN DIM P AND L. DIM D APPLIES BETWEEN DIM L AND K MINIMUM. LEAD DIAMETER IS UNCONTROLLED IN DIM P AND BEYOND DIM K MINIMUM.
5. 022-01 AND -02 OBSOLETE, NEW STANDARD 022-03.

DIM	MILLIMETERS MIN	MILLIMETERS MAX	INCHES MIN	INCHES MAX
A	5.31	5.84	0.209	0.230
B	4.52	4.95	0.178	0.195
C	4.32	5.33	0.170	0.210
D	0.406	0.533	0.016	0.021
E	—	0.762	—	0.030
F	0.406	0.483	0.016	0.019
G	2.54 BSC		0.100 BSC	
H	0.914	1.17	0.036	0.046
J	0.711	1.22	0.028	0.048
K	12.70	—	0.500	—
L	6.35	—	0.250	—
M	45° BSC		45° BSC	
N	1.27 BSC		0.050 BSC	
P	—	1.27	—	0.050

CASE 22-03

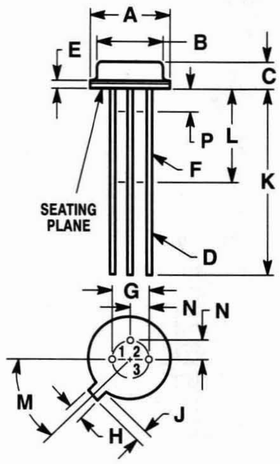

STYLE 1:
PIN 1. EMITTER
2. BASE
3. COLLECTOR

NOTE:
1. ALL RULES AND NOTES ASSOCIATED WITH THE TO46 OUTLINE SHALL APPLY.

DIM	MILLIMETERS MIN	MILLIMETERS MAX	INCHES MIN	INCHES MAX
A	5.31	5.84	0.209	0.230
B	4.52	4.95	0.178	0.195
C	1.65	2.16	0.065	0.085
D	0.406	0.533	0.016	0.021
E	—	1.02	—	0.040
F	0.305	0.483	0.012	0.019
G	2.54 BSC		0.100 BSC	
H	0.914	1.17	0.036	0.046
J	0.711	1.22	0.028	0.048
K	12.70	—	0.500	—
L	6.35	—	0.250	—
M	45° BSC		45° BSC	
N	1.27 BSC		0.050 BSC	
P	—	1.27	—	0.050

CASE 26-03

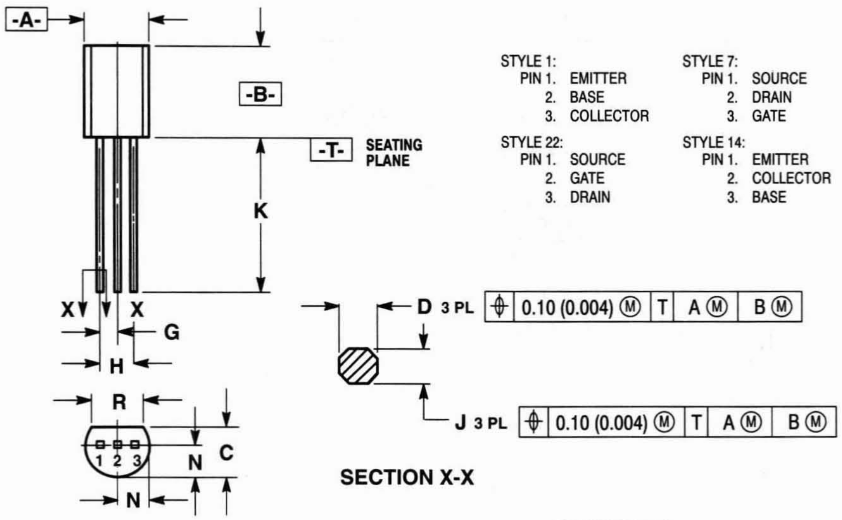

STYLE 1:
PIN 1. EMITTER
2. BASE
3. COLLECTOR

STYLE 7:
PIN 1. SOURCE
2. DRAIN
3. GATE

STYLE 22:
PIN 1. SOURCE
2. GATE
3. DRAIN

STYLE 14:
PIN 1. EMITTER
2. COLLECTOR
3. BASE

NOTES:
1. DIMENSIONING AND TOLERANCING PER ANSI Y14.5M, 1982.
2. CONTROLLING DIMENSION: INCH.

DIM	MILLIMETERS MIN	MILLIMETERS MAX	INCHES MIN	INCHES MAX
A	4.44	5.21	0.175	0.205
B	7.37	7.87	0.290	0.310
C	3.18	4.19	0.125	0.165
D	0.46	0.61	0.018	0.024
F	0.41	0.48	0.016	0.019
G	1.27 BSC		0.050 BSC	
H	2.54 BSC		0.100 BSC	
J	0.46	0.61	0.018	0.024
K	12.70	—	0.500	—
N	2.476 BSC		0.0975 BSC	
R	3.43	—	0.135	—

CASE 29-03

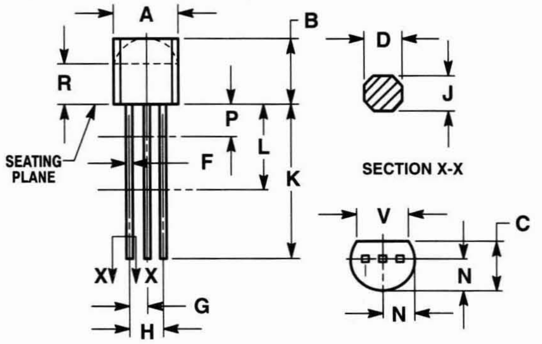

NOTES:
1. DIMENSIONING AND TOLERANCING PER ANSI Y14.5M, 1982.
2. CONTROLLING DIMENSION: INCH.
3. CONTOUR OF PACKAGE BEYOND DIM R IS UNCONTROLLED.
4. DIM F APPLIES BETWEEN P AND L. DIM D AND J APPLIES BETWEEN L AND K MINIMUM. LEAD DIM IS UNCONTROLLED IN P AND BEYOND DIM K MINIMUM.
5. 029-01 AND -02 OBSOLETE, NEW STANDARD 029-04.

DIM	MILLIMETERS MIN	MILLIMETERS MAX	INCHES MIN	INCHES MAX
A	4.45	5.20	0.175	0.205
B	4.32	5.33	0.170	0.210
C	3.18	4.19	0.125	0.165
D	0.41	0.55	—	0.022
F	0.41	0.48	0.016	0.019
G	1.15	1.39	0.045	0.055
H	2.42	2.66	0.095	0.105
J	0.39	0.50	0.015	0.020
K	12.70	—	0.500	—
L	6.35	—	0.250	—
N	2.04	2.66	0.080	0.105
P	—	2.54	—	0.100
R	2.93	—	0.115	—
V	3.43	—	0.135	—

STYLE 1:
PIN 1. EMITTER
2. BASE
3. COLLECTOR

STYLE 2:
PIN 1. BASE
2. EMITTER
3. COLLECTOR

STYLE 3:
PIN 1. ANODE
2. ANODE
3. CATHODE

STYLE 4:
PIN 1. CATHODE
2. CATHODE
3. ANODE

STYLE 5:
PIN 1. DRAIN
2. SOURCE
3. GATE

STYLE 7:
PIN 1. SOURCE
2. DRAIN
3. GATE

STYLE 10:
PIN 1. CATHODE
2. GATE
3. ANODE

STYLE 12:
PIN 1. MAIN TERMINAL 1
2. GATE
3. MAIN TERMINAL 2

STYLE 14:
PIN 1. EMITTER
2. COLLECTOR
3. BASE

STYLE 15:
PIN 1. ANODE 1
2. CATHODE
3. ANODE 2

STYLE 16:
PIN 1. ANODE
2. GATE
3. CATHODE

STYLE 17:
PIN 1. COLLECTOR
2. BASE
3. EMITTER

STYLE 21:
PIN 1. COLLECTOR
2. EMITTER
3. BASE

STYLE 22:
PIN 1. SOURCE
2. GATE
3. DRAIN

STYLE 30:
PIN 1. DRAIN
2. GATE
3. SOURCE

STYLE 33:
PIN 1. RETURN
2. INPUT
3. OUTPUT

CASE 29-04

PACKAGE OUTLINE DIMENSIONS AND FOOTPRINTS (continued)

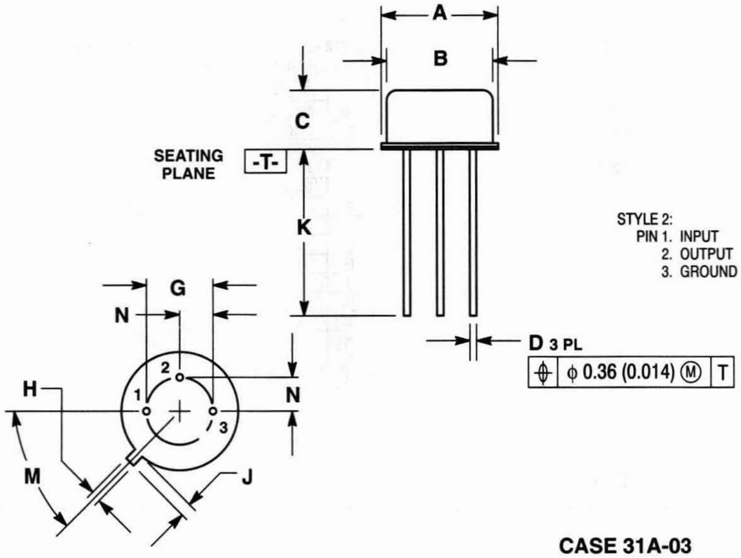

STYLE 2:
PIN 1. INPUT
2. OUTPUT
3. GROUND

NOTES:
1. DIMENSIONING AND TOLERANCING PER ANSI Y14.5M, 1982.
2. CONTROLLING DIMENSION: INCH.
3. 031A-01 OBSOLETE, REPLACED BY NEW STANDARD 031A-03.

DIM	MILLIMETERS MIN	MILLIMETERS MAX	INCHES MIN	INCHES MAX
A	8.51	9.39	0.335	0.370
B	7.75	8.50	0.305	0.335
C	3.81	4.57	0.165	0.185
D	0.41	0.48	0.016	0.019
G	5.08 BSC		0.200 BSC	
H	0.72	0.86	0.028	0.034
J	0.74	1.14	0.029	0.045
K	12.70	—	0.500	—
M	45° BSC		45° BSC	
N	2.54 BSC		0.100 BSC	

CASE 31A-03

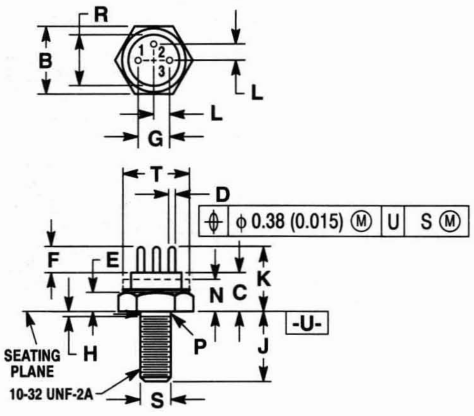

NOTES:
1. DIA. S IS A DATUM AND U IS A DATUM SURFACE.
2. POSITIONAL TOLERANCE FOR PIN DIA. D:
3. POSITION OF LEADS IN RELATION TO THE HEXAGON IS NOT CONTROLLED.
4. PACKAGE CONTOUR OPTIONAL WITHIN DIMENSIONS N AND T.
5. COATED THREADS SHALL MEET THE REQUIREMENTS OF ANSI B1.1-1960.
6. LENGTH OF INCOMPLETE OR UNDERCUT THREADS AT P DIA.
7. DIMENSIONING AND TOLERANCING PER ANSI Y14.5, 1973.
8. CONTROLLING DIMENSIONS: INCH.

DIM	MILLIMETERS MIN	MILLIMETERS MAX	INCHES MIN	INCHES MAX
B	10.77	11.10	0.424	0.437
C	6.22	7.49	0.245	0.295
D	0.88	1.52	0.035	0.060
E	2.54	3.42	0.100	0.135
F	3.55	4.06	0.140	0.160
G	5.08 BSC		0.200 BSC	
H	—	1.98	—	0.078
J	10.41	11.56	0.410	0.455
K	9.65	12.19	0.380	0.480
L	2.54 BSC		0.100 BSC	
N	—	4.19	—	0.165
P	4.14	4.80	0.163	0.189
R	8.13	9.14	0.320	0.360
S	4.650	4.803	0.1831	0.1891
T	9.14	11.10	0.360	0.437

STYLE 1:
PIN 1. EMITTER
2. BASE
3. COLLECTOR
CASE. ISOLATED

CASE 36-03

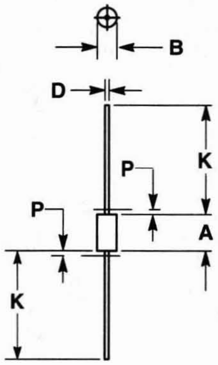

NOTES:
1. DIMENSIONING AND TOLERANCING PER ANSI Y14.5M, 1982.
2. CONTROLLING DIMENSION: INCH.
3. LEAD FINISH AND DIAMETER UNCONTROLLED IN DIM P.

DIM	MILLIMETERS MIN	MILLIMETERS MAX	INCHES MIN	INCHES MAX
A	9.14	9.52	0.360	0.375
B	4.83	5.21	0.190	0.205
D	0.97	1.07	0.038	0.042
K	25.40	—	1.000	—
P	—	1.27	—	0.050

CASE 41A-02

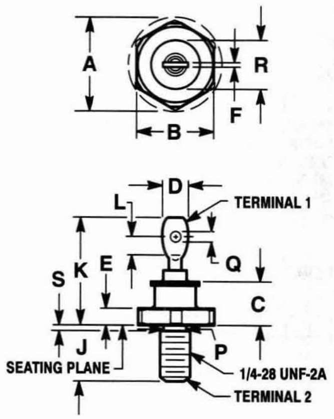

STYLE 1:
TERM. 1. CATHODE
2. ANODE

NOTES:
1. CHAMFER OR UNDERCUT ON ONE OR BOTH ENDS OF HEXAGONAL BASE IS OPTIONAL.
2. ANGULAR ORIENTATION AND CONTOUR OF TERMINAL ONE IS OPTIONAL.
3. THREADS ARE PLATED.
4. DIMENSIONING AND TOLERANCING PER ANSI Y14.5, 1973.

DIM	MILLIMETERS MIN	MILLIMETERS MAX	INCHES MIN	INCHES MAX
A	—	20.07	—	0.790
B	16.94	17.45	0.669	0.687
C	—	11.43	—	0.450
D	—	9.53	—	0.375
E	2.92	5.08	0.115	0.200
F	—	2.03	—	0.080
J	10.72	11.51	0.422	0.453
K	19.05	25.40	0.750	1.00
L	3.96	—	0.156	—
P	5.59	6.32	0.220	0.249
Q	3.56	4.45	0.140	0.175
R	—	16.94	—	0.667
S	—	2.26	—	0.089

CASE 42A-01

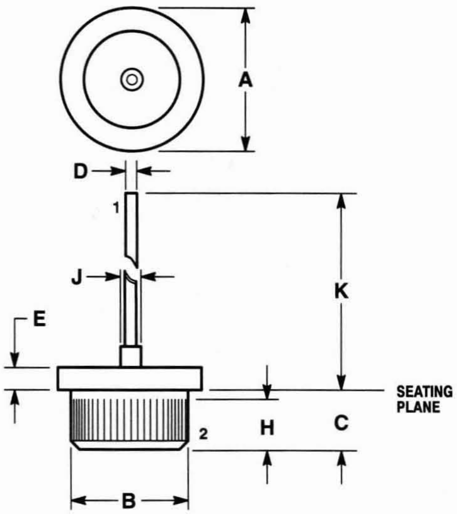

STYLE 2:
TERM 1. ANODE
2. CATHODE

NOTES:
1. DIMENSIONING AND TOLERANCING PER ANSI Y14.5M, 1982.
2. CONTROLLING DIMENSION: INCH.
3. 50 TPI STRAIGHT KNURL.
4. POLARITY, INK MARKED ON PACKAGE.

DIM	MILLIMETERS MIN	MILLIMETERS MAX	INCHES MIN	INCHES MAX
A	15.49	16.26	0.610	0.640
B	12.72	12.83	0.501	0.505
C	5.08	6.35	0.200	0.250
D	2.46	2.62	0.097	0.103
E	2.03	4.83	0.080	0.190
H	5.08	6.35	0.200	0.250
J	—	3.56	—	0.140
K	—	15.24	—	0.600

CASE 43-04

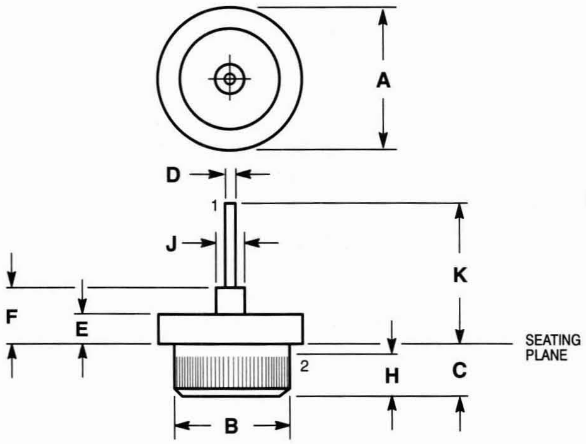

STYLE 2:
TERM 1. ANODE
2. CATHODE

NOTES:
1. DIMENSIONING AND TOLERANCING PER ANSI Y14.5M, 1982.
2. CONTROLLING DIMENSION: INCH.
3. 50 TPI STRAIGHT KNURL.
4. POLARITY, INK MARKED ON PACKAGE.
5. 043-01 AND -02 OBSOLETE, REPLACED BY NEW STANDARD 043-07.

DIM	MILLIMETERS MIN	MILLIMETERS MAX	INCHES MIN	INCHES MAX
A	15.49	16.26	0.610	0.640
B	12.72	12.83	0.501	0.505
C	5.08	6.35	0.200	0.250
D	1.19	1.42	0.047	0.056
E	2.03	4.83	0.080	0.190
F	—	10.77	—	0.424
H	4.57	6.35	0.180	0.250
J	—	3.56	—	0.140
K	12.70	—	0.500	—

CASE 43-07

PACKAGE OUTLINE DIMENSIONS AND FOOTPRINTS (continued)

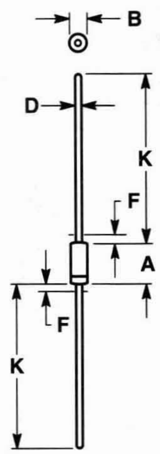

NOTES:
1. PACKAGE CONTOUR OPTIONAL WITHIN DIA B AND LENGTH A. HEAT SLUGS, IF ANY, SHALL BE INCLUDED WITHIN THIS CYLINDER, BUT SHALL NOT BE SUBJECT TO THE MIN LIMIT OF DIA B.
2. LEAD DIA NOT CONTROLLED IN ZONES F, TO ALLOW FOR FLASH, LEAD FINISH BUILDUP, AND MINOR IRREGULARITIES OTHER THAN HEAT SLUGS.

DIM	MILLIMETERS MIN	MILLIMETERS MAX	INCHES MIN	INCHES MAX
A	5.84	7.62	0.230	0.300
B	2.16	2.72	0.085	0.107
D	0.46	0.56	0.018	0.022
F	—	1.27	—	0.050
K	25.40	38.10	1.000	1.500

All JEDEC dimensions and notes apply

CASE 51-02

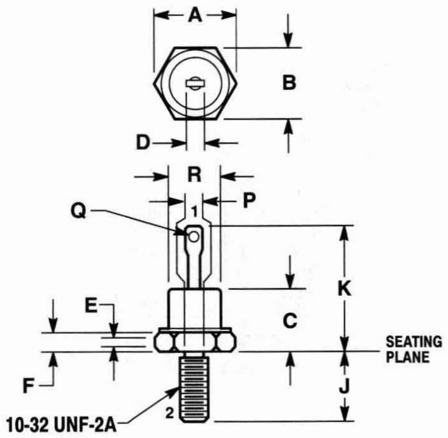

STYLE 2:
TERM. 1. ANODE
2. CATHODE

NOTES:
1. ALL RULES AND NOTES ASSOCIATED WITH REFERENCED DO-4 OUTLINE SHALL APPLY.
2. DIMENSIONING AND TOLERANCING PER ANSI Y14.5M, 1982.
3. CONTROLLING DIMENSION: INCH.

DIM	MILLIMETERS MIN	MILLIMETERS MAX	INCHES MIN	INCHES MAX
A	—	12.82	—	0.505
B	10.77	11.09	0.424	0.437
C	—	10.28	—	0.405
D	—	6.35	—	0.250
E	1.53	—	0.060	—
F	1.91	4.44	0.075	0.175
J	10.72	11.50	0.422	0.453
K	15.24	20.32	0.600	0.800
P	4.14	4.80	0.163	0.189
Q	1.53	2.41	0.060	0.095
R	6.74	10.76	0.265	0.424

CASE 56-03

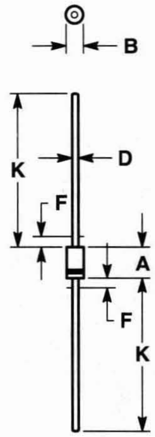

NOTES:
1. ALL RULES AND NOTES ASSOCIATED WITH JEDEC DO-41 OUTLINE SHALL APPLY.
2. POLARITY DENOTED BY CATHODE BAND.
3. LEAD DIAMETER NOT CONTROLLED WITHIN "F" DIMENSION.

DIM	MILLIMETERS MIN	MILLIMETERS MAX	INCHES MIN	INCHES MAX
A	4.07	5.20	0.160	0.205
B	2.04	2.71	0.080	0.107
D	0.71	0.86	0.028	0.034
F	—	1.27	—	0.050
K	27.94	—	1.100	—

CASE 59-03

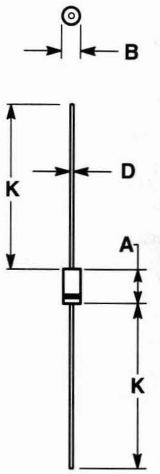

NOTES:
1. ALL RULES AND NOTES ASSOCIATED WITH JEDEC DO-41 OUTLINE SHALL APPLY.
2. POLARITY DENOTED BY CATHODE BAND.
3. LEAD DIAMETER NOT CONTROLLED WITHIN "F" DIMENSION.

	MILLIMETERS		INCHES	
DIM	MIN	MAX	MIN	MAX
A	5.97	6.60	0.235	0.260
B	2.79	3.05	0.110	0.120
D	0.76	0.86	0.030	0.034
K	27.94	—	1.100	—

CASE 59-04

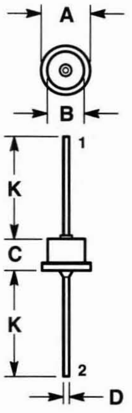

STYLE 1:
PIN 1. CATHODE
2. ANODE

NOTES:
1. DIMENSIONING AND TOLERANCING PER ANSI Y14.5M, 1982.
2. CONTROLLING DIMENSION: INCH.

	MILLIMETERS		INCHES	
DIM	MIN	MAX	MIN	MAX
A	—	11.43	—	0.450
B	—	8.89	—	0.350
C	—	7.62	—	0.300
D	1.17	1.42	0.046	0.056
K	24.90	—	0.980	—

CASE 60-01

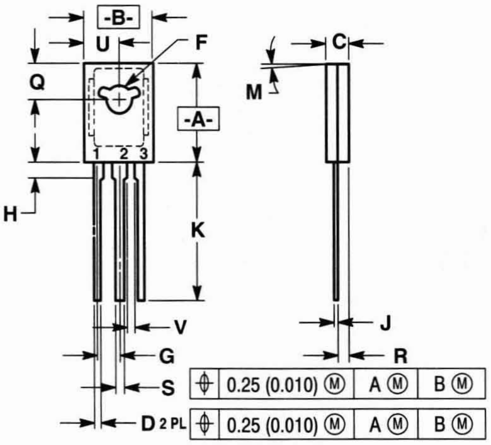

STYLE 1:
PIN 1. EMITTER
2. COLLECTOR
3. BASE

STYLE 2:
PIN 1. CATHODE
2. ANODE
3. GATE

STYLE 3:
PIN 1. BASE
2. COLLECTOR
3. EMITTER

STYLE 5:
PIN 1. MT1
2. MT2
3. GATE

NOTES:
1. DIMENSIONING AND TOLERANCING PER ANSI Y14.5M, 1982.
2. CONTROLLING DIMENSION: INCH.
3. 077-01 THRU -06 OBSOLETE, NEW STANDARD 077-07.

	MILLIMETERS		INCHES	
DIM	MIN	MAX	MIN	MAX
A	10.80	11.04	0.425	0.435
B	7.50	7.74	0.295	0.305
C	2.42	2.66	0.095	0.105
D	0.51	0.66	0.020	0.026
F	2.93	3.30	0.115	0.130
G	2.39 BSC		0.094 BSC	
H	1.27	2.41	0.050	0.095
J	0.39	0.63	0.015	0.025
K	14.61	16.63	0.575	0.655
M	3° TYP		3° TYP	
Q	3.76	4.01	0.148	0.158
R	1.15	1.39	0.045	0.055
S	0.64	0.88	0.025	0.035
U	3.69	3.93	0.145	0.155
V	1.02	—	0.040	—

CASE 77-07

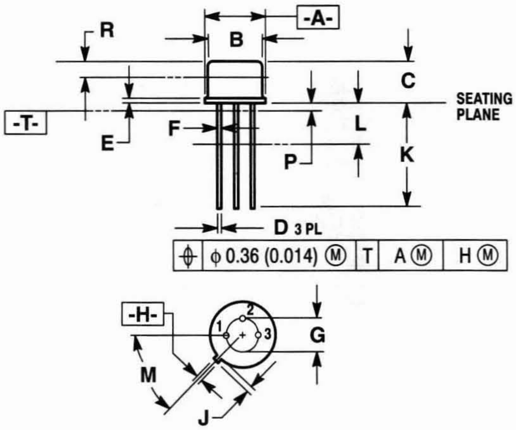

NOTES:
1. DIMENSIONING AND TOLERANCING PER ANSI Y14.5M, 1982.
2. CONTROLLING DIMENSION: INCH.
3. DIMENSION J MEASURED FROM DIMENSION A MAXIMUM.
4. DIMENSION B SHALL NOT VARY MORE THAN 0.25 (0.010) IN ZONE R. THIS ZONE CONTROLLED FOR AUTOMATIC HANDLING.
5. DIMENSION F APPLIES BETWEEN DIMENSION P AND L. DIMENSION D APPLIES BETWEEN DIMENSION L AND K MINIMUM. LEAD DIAMETER IS UNCONTROLLED IN DIMENSION P AND BEYOND DIMENSION K MINIMUM.
6. 079-01, -02 OBSOLETE, NEW STANDARD 079-04.

	MILLIMETERS		INCHES	
DIM	MIN	MAX	MIN	MAX
A	8.51	9.39	0.335	0.370
B	7.75	8.50	0.305	0.335
C	6.10	6.60	0.240	0.260
D	0.41	0.53	0.016	0.021
E	0.23	1.04	0.009	0.041
F	0.41	0.48	0.016	0.019
G	5.08 BSC		0.200 BSC	
H	0.72	0.86	0.028	0.034
J	0.74	1.14	0.029	0.045
K	12.70	19.05	0.500	0.750
L	6.35	—	0.250	—
M	45° BSC		45° BSC	
P	—	1.27	—	0.050
R	2.54	—	0.100	—

STYLE 1:
PIN 1. EMITTER
2. BASE
3. COLLECTOR

STYLE 3:
PIN 1. CATHODE
2. GATE
3. ANODE

STYLE 5:
PIN 1. COLLECTOR
2. BASE
3. EMITTER

CASE 79-04

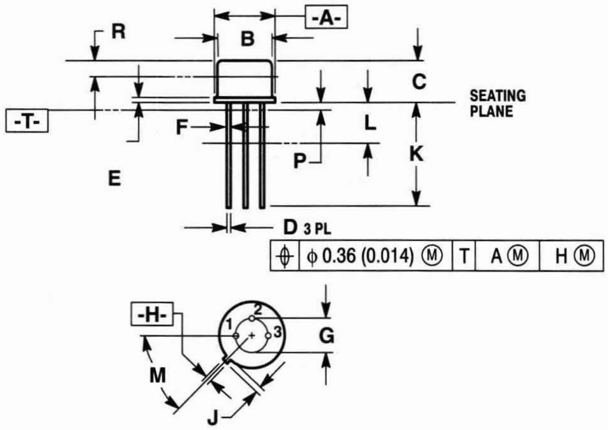

NOTES:
1. DIMENSIONING AND TOLERANCING PER ANSI Y.145M, 1982.
2. CONTROLLING DIMENSION: INCH.
3. DIMENSION J MEASURED FROM DIMENSION A MAXIMUM.
4. DIMENSION B SHALL NOT VARY MORE THAN 0.25 (0.010) IN ZONE R. THIS ZONE CONTROLLED FOR AUTOMATIC HANDLING.
5. DIMENSION F APPLIES BETWEEN DIMENSION P AND L. DIMENSION D APPLIES BETWEEN DIMENSION L AND K MINIMUM. LEAD DIAMETER IS UNCONTROLLED IN DIMENSION P AND BEYOND DIMENSION K MINIMUM.
6. 079-03 OBSOLETE, NEW STANDARD 079-05.

	MILLIMETERS		INCHES	
DIM	MIN	MAX	MIN	MAX
A	9.02	9.29	0.355	0.366
B	8.01	8.50	0.315	0.335
C	4.20	4.57	0.165	0.180
D	0.44	0.53	0.017	0.021
E	0.44	0.88	0.017	0.035
F	0.41	0.48	0.016	0.019
G	5.08 BSC		0.200 BSC	
H	0.72	0.86	0.028	0.034
J	0.74	1.01	0.029	0.040
K	12.70	19.05	0.500	0.750
L	6.35	—	0.250	—
M	45° BSC		45° BSC	
P	—	1.27	—	0.050
R	2.54	—	0.100	—

STYLE 5:
PIN 1. COLLECTOR
2. BASE
3. EMITTER

STYLE 7:
PIN 1. DRAIN
2. GATE
3. SOURCE

CASE 79-05

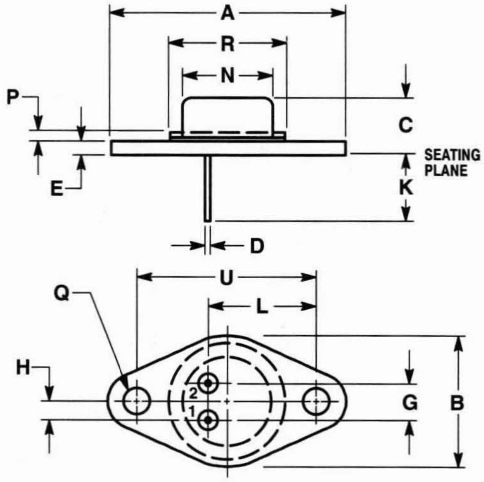

NOTE:
1. DIMENSIONING AND TOLERANCING PER ANSI Y14.5M, 1982.
2. CONTROLLING DIMENSION: INCH.
3. THE OUTLINE CONTOUR IS OPTIONAL WITHIN DIMENSION P AND R.
4. 080-01 OBSOLETE, NEW STANDARD 080-02.

	MILLIMETERS		INCHES	
DIM	MIN	MAX	MIN	MAX
A	—	31.80	—	1.252
B	17.27	17.78	0.680	0.700
C	6.35	8.64	0.250	0.340
D	0.71	0.86	0.028	0.034
E	1.27	1.91	0.050	0.075
G	4.83	5.33	0.190	0.210
H	2.41	2.67	0.095	0.105
K	9.14	—	0.360	—
L	14.48	14.99	0.570	0.590
N	11.94	12.70	0.470	0.500
P	—	1.27	—	0.050
Q	3.61	3.86	0.142	0.152
R	—	15.75	—	0.620
U	24.33	24.43	0.958	0.962

STYLE 1:
PIN 1. BASE
2. EMITTER
CASE. COLLECTOR

CASE 80-02

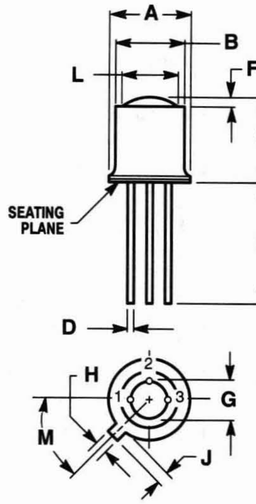

STYLE 1:
PIN 1. EMITTER
2. BASE
3. COLLECTOR

STYLE 3:
PIN 1. MAIN TERMINAL
2. MAIN TERMINAL
3. SUBSTRATE
(DO NOT CONNECT)

NOTES:
1. LEADS WITHIN 0.13 mm (0.005) RADIUS OF TRUE POSITION AT SEATING PLANE, AT MAXIMUM MATERIAL CONDITION.
2. PIN 3 INTERNALLY CONNECTED TO CASE.
3. 082-01 THRU 082-03 ARE OBSOLETE, REPLACED BY NEW STD 082-05.

	MILLIMETERS		INCHES	
DIM	MIN	MAX	MIN	MAX
A	5.31	5.84	0.209	0.230
B	4.52	4.95	0.178	0.195
C	4.57	6.48	0.180	0.255
D	0.41	0.48	0.016	0.019
F	—	1.14	—	0.045
G	2.54 BSC		0.100 BSC	
H	0.99	1.17	0.039	0.046
J	0.84	1.22	0.033	0.048
K	12.70	—	0.500	—
L	3.35	4.01	0.132	0.158
M	45° BSC		45° BSC	

CASE 82-05

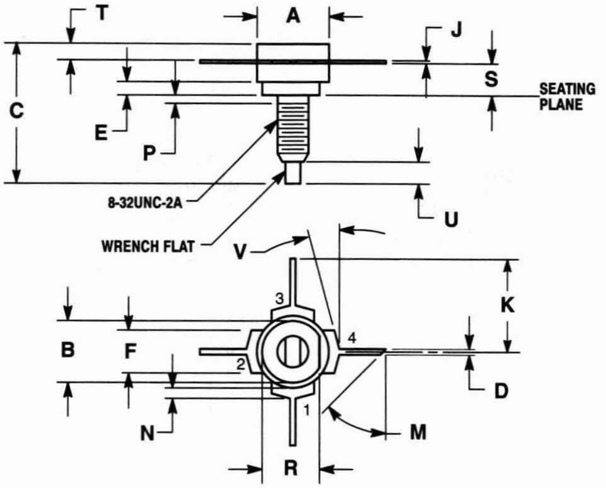

STYLE 1:
PIN 1. EMITTER
2. BASE
3. EMITTER
4. COLLECTOR

NOTES:
1. DIMENSIONING AND TOLERANCING PER ANSI Y14.5M, 1982.
2. CONTROLLING DIMENSION: INCH.
3. 144B-01, THRU -04 OBSOLETE, REPLACED BY NEW STANDARD 144B-05.

	MILLIMETERS		INCHES	
DIM	MIN	MAX	MIN	MAX
A	9.40	9.78	0.370	0.385
B	8.13	8.38	0.320	0.330
C	17.02	20.07	0.670	0.790
D	0.64	0.89	0.025	0.035
E	1.78	—	0.070	—
F	5.64	5.97	0.215	0.235
J	0.08	0.18	0.003	0.007
K	12.45	—	0.490	—
M	45° NOM		45° NOM	
N	1.27	1.52	0.050	0.060
P	—	1.27	—	0.050
R	7.59	7.80	0.299	0.307
S	4.01	4.52	0.158	0.178
T	2.11	2.54	0.083	0.100
U	2.49	3.35	0.089	0.132
V	10°	20°	10°	20°

CASE 144B-05

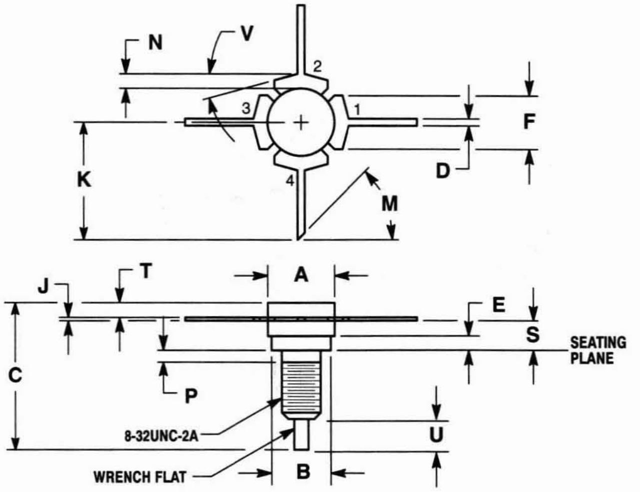

STYLE 1:
PIN 1. EMITTER
2. BASE
3. EMITTER
4. COLLECTOR

NOTES:
1. DIMENSIONING AND TOLERANCING PER ANSI Y14.5M, 1982.
2. CONTROLLING DIMENSION: INCH.
3. DIM N IS FROM DIAMETER A TO ANGLE V.
4. DIM P IS THREAD RELIEF.
5. 144D-01, THRU -05 OBSOLETE, REPLACED BY NEW STANDARD 144D-06.

	MILLIMETERS		INCHES	
DIM	MIN	MAX	MIN	MAX
A	7.06	7.26	0.278	0.286
B	6.20	6.50	0.244	0.256
C	14.99	16.89	0.590	0.665
D	0.64	0.89	0.025	0.035
E	1.50	—	0.059	—
F	5.46	5.97	0.215	0.235
J	0.08	0.18	0.003	0.007
K	12.45	—	0.490	—
M	45° NOM		45° NOM	
N	1.40	1.65	0.055	0.065
P	—	1.27	—	0.050
S	3.00	3.25	0.118	0.128
T	1.40	1.78	0.055	0.070
U	2.92	3.68	0.115	0.145
V	10°	20°	10°	20°

CASE 144D-06

PACKAGE OUTLINE DIMENSIONS AND FOOTPRINTS (continued)

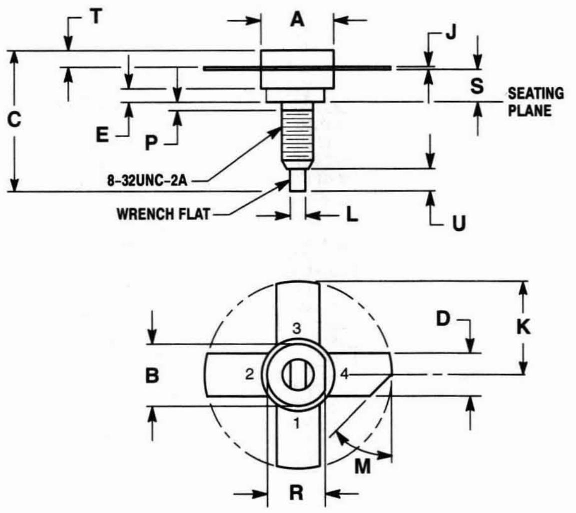

STYLE 1:
PIN 1. EMITTER
2. BASE
3. EMITTER
4. COLLECTOR

NOTES:
1. DIMENSIONING AND TOLERANCING PER ANSI Y14.5M, 1982.
2. CONTROLLING DIMENSION: INCH.
3. 145A-01, THRU -07 OBSOLETE, REPLACED BY NEW STANDARD 145A-09.

DIM	MILLIMETERS		INCHES	
	MIN	MAX	MIN	MAX
A	9.40	9.78	0.370	0.385
B	8.13	8.38	0.320	0.330
C	17.02	20.07	0.670	0.790
D	5.46	5.97	0.215	0.235
E	1.78	—	0.070	—
J	0.08	0.18	0.003	0.007
K	12.45	—	0.490	—
L	1.40	1.78	0.055	0.070
M	45° NOM		45° NOM	
P	—	1.27	—	0.050
R	7.59	7.80	0.299	0.307
S	4.01	4.52	0.158	0.178
T	2.11	2.54	0.083	0.100
U	2.49	3.35	0.098	0.132

CASE 145A-09

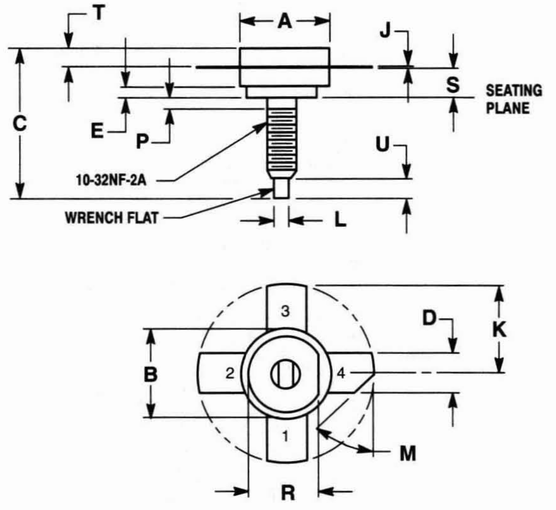

STYLE 1:
PIN 1. EMITTER
2. BASE
3. EMITTER
4. COLLECTOR

NOTES:
1. DIMENSIONING AND TOLERANCING PER ANSI Y14.5M, 1982.
2. CONTROLLING DIMENSION: INCH.
3. I45A-08 OBSOLETE, REPLACED BY NEW STANDARD 145A-10.

DIM	MILLIMETERS		INCHES	
	MIN	MAX	MIN	MAX
A	12.45	12.95	0.490	0.510
B	10.54	10.80	0.415	0.425
C	19.68	22.73	0.775	0.895
D	5.46	5.97	0.215	0.235
E	1.83	—	0.072	—
J	0.08	0.18	0.003	0.007
K	12.45	—	0.490	—
L	1.65	1.90	0.065	0.075
M	45° NOM		45° NOM	
P	—	1.27	—	0.050
R	9.73	10.06	0.383	0.396
S	3.84	4.50	0.151	0.177
T	2.11	2.54	0.083	0.100
U	2.49	3.35	0.098	0.132

CASE 145A-10

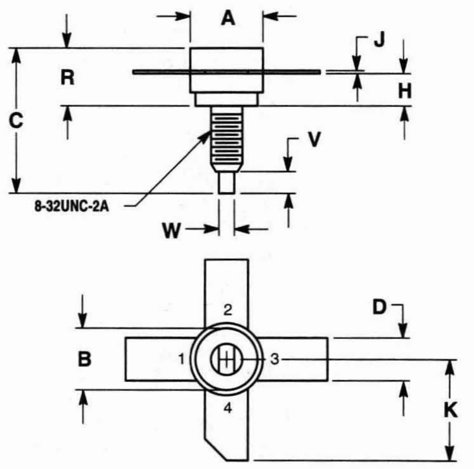

STYLE 1:
PIN 1. EMITTER
2. BASE
3. EMITTER
4. COLLECTOR

NOTES:
1. DIMENSIONING AND TOLERANCING PER ANSI Y14.5M, 1982.
2. CONTROLLING DIMENSION: INCH.

DIM	MILLIMETERS		INCHES	
	MIN	MAX	MIN	MAX
A	9.28	9.77	0.365	0.385
B	8.13	8.38	0.320	0.330
C	17.78	19.76	0.700	0.778
D	5.59	5.84	0.220	0.230
H	4.07	4.31	0.160	0.170
J	0.11	0.15	0.004	0.006
K	12.45	13.20	0.490	0.520
R	6.74	7.23	0.265	0.285
V	2.54	3.30	0.100	0.130
W	1.53	1.77	0.060	0.070

CASE 145D-01

PACKAGE OUTLINE DIMENSIONS AND FOOTPRINTS (continued)

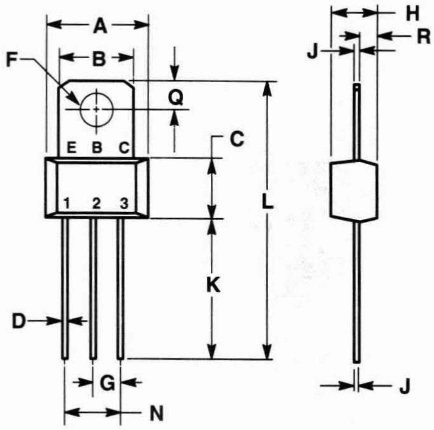

STYLE 1:
PIN 1. EMITTER
2. BASE
3. COLLECTOR
(COLLECTOR CONNECTED TO TAB)

NOTES:
1. LEADS WITHIN 0.15 mm(0.006) TOTAL OF TRUE POSITION AT CASE, AT MAXIMUM MATERIAL CONDITION.
2. 152-01 OBSOLETE, NEW STANDARD 152-02.

DIM	MILLIMETERS MIN	MILLIMETERS MAX	INCHES MIN	INCHES MAX
A	9.14	9.53	0.360	0.375
B	6.60	7.24	0.260	0.285
C	5.41	5.66	0.213	0.223
D	0.38	0.53	0.015	0.021
F	3.18	3.33	0.125	0.131
G	2.54 BSC		0.100 BSC	
H	3.94	4.19	0.155	0.165
J	0.36	0.41	0.014	0.016
K	11.63	12.70	0.458	0.500
L	24.58	25.53	0.968	1.005
N	5.08 BSC		0.200 BSC	
Q	2.39	2.69	0.094	0.106
R	1.14	1.40	0.045	0.055

CASE 152-02

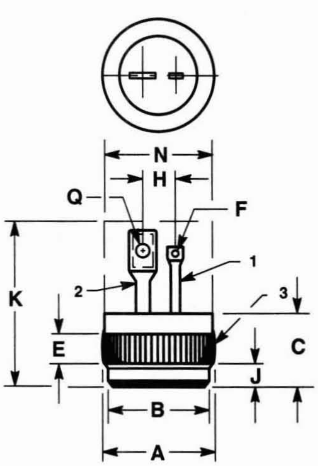

STYLE 1:
TERM. 1. GATE
2. CATHODE
3. ANODE

STYLE 3:
TERM. 1. GATE
2. MAIN TERMINAL 1
3. MAIN TERMINAL 2

DIM	MILLIMETERS MIN	MILLIMETERS MAX	INCHES MIN	INCHES MAX
A	12.73	12.83	0.501	0.505
B	11.81	12.06	0.465	0.475
C	8.39	9.65	0.330	0.380
E	2.54	—	0.100	—
F	0.89	2.16	0.035	0.085
H	3.75	4.41	0.148	0.174
J	2.04	2.46	0.080	0.097
K	—	20.32	—	0.800
N	—	12.95	—	0.510
Q	1.65	4.06	0.065	0.160

CASE 174-04

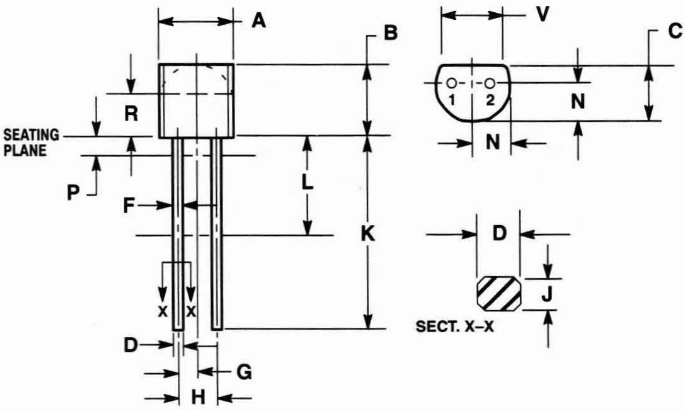

STYLE 1:
PIN 1. ANODE
2. CATHODE

NOTES:
1. DIMENSIONING AND TOLERANCING PER ANSI Y14.5M, 1982.
2. CONTROLLING DIMENSION: INCH.
3. CONTOUR OF PACKAGE BEYOND ZONE R IS UNCONTROLLED.
4. DIM F APPLIES BETWEEN P AND L. DIM D AND J APPLIES BETWEEN L AND K MINIMUM. LEAD DIM IS UNCONTROLLED IN P AND BEYOND DIM K MINIMUM.
5. CASE 182–01 AND –03 OBSOLETE, NEW STANDARD 182–02.

DIM	MILLIMETERS MIN	MILLIMETERS MAX	INCHES MIN	INCHES MAX
A	4.45	5.21	0.175	0.205
B	4.32	5.33	0.170	0.210
C	3.18	4.19	0.125	0.165
D	0.41	0.56	0.016	0.022
F	0.407	0.482	0.016	0.019
G	1.27 BSC		0.050 BSC	
H	2.54 BSC		0.100 BSC	
J	0.36	0.41	0.014	0.016
K	12.70	—	0.500	—
L	6.35	—	0.250	—
N	2.03	2.66	0.080	0.105
P	—	1.27	—	0.050
R	2.93	—	0.115	—
V	3.43	—	0.135	—

CASE 182-02

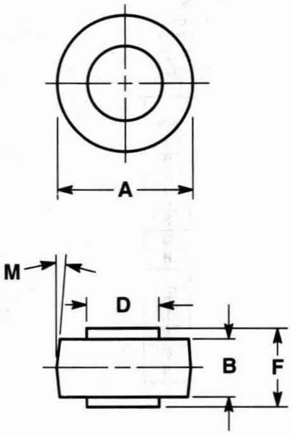

DIM	MILLIMETERS MIN	MILLIMETERS MAX	INCHES MIN	INCHES MAX
A	8.43	8.69	0.332	0.342
B	4.19	4.45	0.165	0.175
D	5.54	5.64	0.218	0.222
F	5.94	6.25	0.234	0.246
M	5° NOM		5° NOM	

CASE 193-04

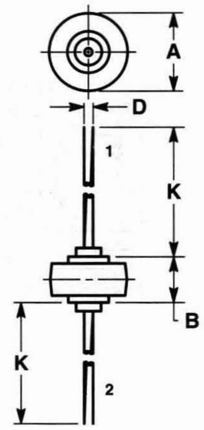

STYLE 1:
PIN 1. CATHODE
2. ANODE

NOTE:
1. CATHODE SYMBOL ON PKG.

DIM	MILLIMETERS MIN	MILLIMETERS MAX	INCHES MIN	INCHES MAX
A	8.43	8.69	0.332	0.342
B	5.94	6.25	0.234	0.246
D	1.27	1.35	0.050	0.053
K	25.15	25.65	0.990	1.010

CASE 194-04

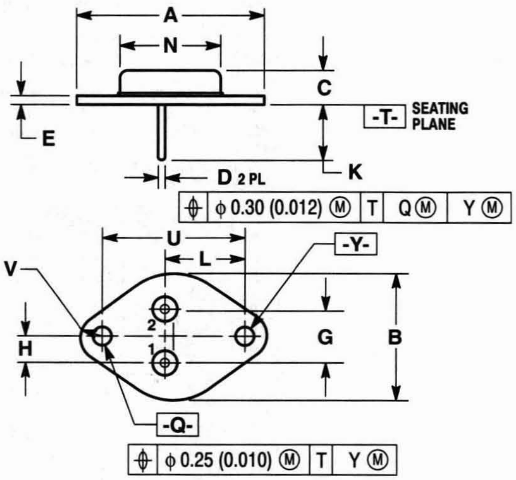

STYLE 1:
PIN 1. BASE
2. EMITTER
CASE. COLLECTOR

STYLE 3:
PIN 1. GATE
2. SOURCE
CASE. DRAIN

NOTES:
1. DIMENSIONING AND TOLERANCING PER ANSI Y14.5M, 1982.
2. CONTROLLING DIMENSION: INCH.
3. 197A-01 AND -02 OBSOLETE, NEW STANDARD 197A-03.

DIM	MILLIMETERS MIN	MILLIMETERS MAX	INCHES MIN	INCHES MAX
A	38.86 REF		1.530 REF	
B	25.15	26.67	0.990	1.050
C	6.35	8.51	0.250	0.335
D	1.45	1.60	0.057	0.063
E	1.53	1.77	0.060	0.070
G	10.92 BSC		0.430 BSC	
H	5.46 BSC		0.215 BSC	
K	11.18	12.19	0.440	0.480
L	16.89 BSC		0.665 BSC	
N	19.31	21.08	0.760	0.830
Q	3.84	4.19	0.151	0.165
U	30.15 BSC		1.187 BSC	
V	3.33	4.77	0.131	0.188

CASE 197A-03

PACKAGE OUTLINE DIMENSIONS AND FOOTPRINTS (continued)

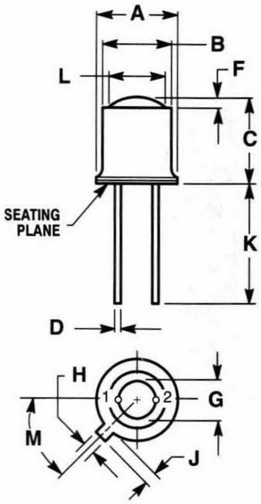

STYLE 1:
PIN 1. ANODE
2. CATHODE

NOTES:
1. PIN 2 INTERNALLY CONNECTED TO CASE.
2. LEADS WITHIN 0.13 mm (0.005) RADIUS OF TRUE POSITION AT SEATING PLANE AT MAXIMUM MATERIAL CONDITION.

DIM	MILLIMETERS MIN	MILLIMETERS MAX	INCHES MIN	INCHES MAX
A	5.31	5.84	0.209	0.230
B	4.52	4.95	0.178	0.195
C	5.08	6.35	0.200	0.250
D	0.41	0.48	0.016	0.019
F	0.51	1.02	0.020	0.040
G	2.54 BSC		0.100 BSC	
H	0.99	1.17	0.039	0.046
J	0.84	1.22	0.033	0.048
K	12.70	—	0.500	—
L	3.35	4.01	0.132	0.158
M	45° BSC		45° BSC	

CASE 209-01

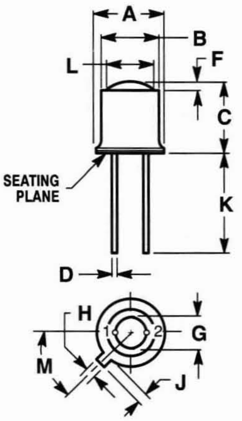

STYLE 1:
PIN 1. ANODE
2. CATHODE

NOTES:
1. PIN 2 INTERNALLY CONNECTED TO CASE.
2. LEADS WITHIN 0.13 mm (0.005) RADIUS OF TRUE POSITION AT SEATING PLANE AT MAXIMUM MATERIAL CONDITION.

DIM	MILLIMETERS MIN	MILLIMETERS MAX	INCHES MIN	INCHES MAX
A	5.31	5.84	0.209	0.230
B	4.52	4.95	0.178	0.195
C	6.22	6.98	0.245	0.275
D	0.41	0.48	0.016	0.019
F	1.19	1.60	0.047	0.063
G	2.54 BSC		0.100 BSC	
H	0.99	1.17	0.039	0.046
J	0.84	1.22	0.033	0.048
K	12.70	—	0.500	—
L	3.35	4.01	0.132	0.158
M	45° BSC		45° BSC	

CASE 209-02

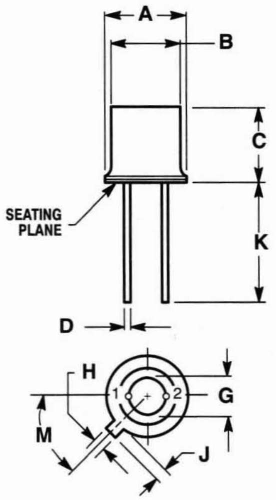

STYLE 1:
PIN 1. ANODE
2. CATHODE

NOTES:
1. PIN 2 INTERNALLY CONNECTED TO CASE.
2. LEADS WITHIN 0.13 mm (0.005) RADIUS OF TRUE POSITION AT SEATING PLANE AT MAXIMUM MATERIAL CONDITION.

DIM	MILLIMETERS MIN	MILLIMETERS MAX	INCHES MIN	INCHES MAX
A	5.31	5.84	0.209	0.230
B	4.52	4.95	0.178	0.195
C	4.57	5.33	0.180	0.210
D	0.41	0.48	0.016	0.019
G	2.54 BSC		0.100 BSC	
H	0.99	1.17	0.039	0.046
J	0.84	1.22	0.033	0.048
K	12.70	—	0.500	—
M	45° BSC		45° BSC	

CASE 210-01

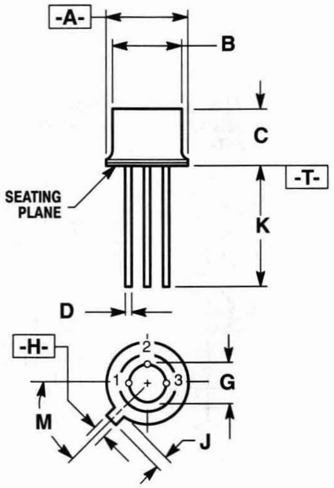

STYLE 1:
PIN 1. ANODE
2. CATHODE
3. CASE

NOTES:
1. PIN 3 INTERNALLY CONNECTED TO CASE.
2. LEAD POSITIONAL TOLERANCE AT SEATING PLANE:

⌖	φ 0.36 (0.014) Ⓜ	T	A Ⓜ	H Ⓜ

DIM	MILLIMETERS MIN	MILLIMETERS MAX	INCHES MIN	INCHES MAX
A	5.31	5.84	0.209	0.230
B	4.65	4.70	0.183	0.185
C	3.12	3.28	0.123	0.129
D	0.41	0.48	0.016	0.019
G	2.54 BSC		0.100 BSC	
H	0.99	1.17	0.039	0.046
J	0.84	1.22	0.033	0.048
K	12.70	—	0.500	—
M	45° BSC		45° BSC	

CASE 210A-01

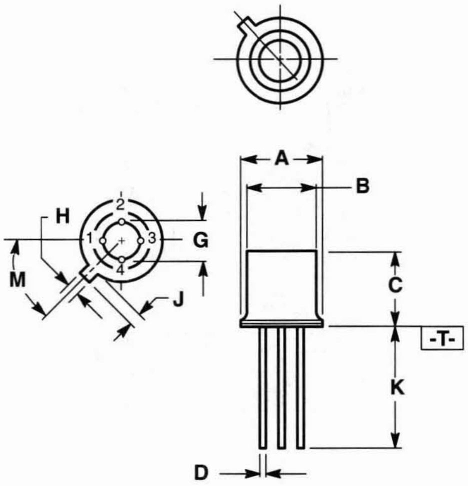

STYLE 1:
PIN 1. $-V_{OUT}$
2. $+V_{OUT}$
3. GROUND CASE
4. $+V_{CC}$

NOTES:
1. DIMENSIONS A AND H ARE DATUMS AND T IS A DATUM SURFACE.
2. LEAD POSITIONAL TOLERANCE AT SEATING PLANE:

⌖	φ 0.36 (0.014) Ⓜ	T	A Ⓜ	H Ⓜ

3. DIMENSIONING AND TOLERANCING PER Y14.5, 1982.

DIM	MILLIMETERS MIN	MILLIMETERS MAX	INCHES MIN	INCHES MAX
A	5.30	5.38	0.209	0.212
B	4.64	4.69	0.183	0.185
C	3.42	3.60	0.135	0.142
D	0.40	0.48	0.016	0.019
G	2.54 BSC		0.100 BSC	
H	0.91	1.16	0.036	0.046
J	0.83	1.21	0.033	0.048
K	12.70	—	0.500	—
M	45° BSC		45° BSC	

CASE 210D-01

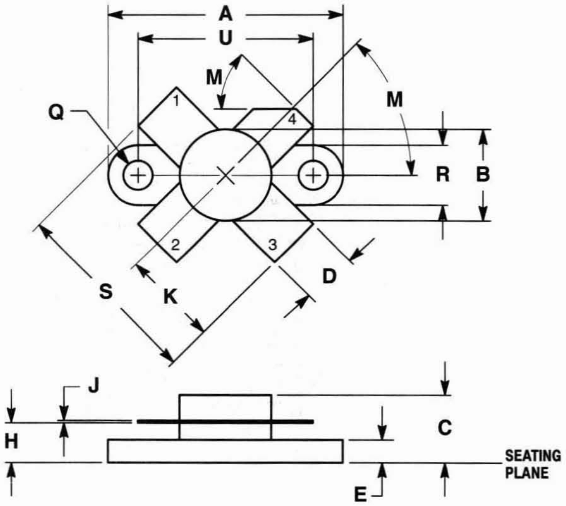

STYLE 1:
PIN 1. EMITTER
2. BASE
3. EMITTER
4. COLLECTOR

STYLE 2:
PIN 1. SOURCE
2. GATE
2. SOURCE
2. DRAIN

NOTES:
1. DIMENSIONING AND TOLERANCING PER ANSI Y14.5M, 1982.
2. CONTROLLING DIMENSION: INCH.
3. 211-05 AND -09 OBSOLETE.
4. 211-01 AND -03 OBSOLETE, REPLACED BY NEW STANDARD 211-07.

DIM	MILLIMETERS MIN	MILLIMETERS MAX	INCHES MIN	INCHES MAX
A	24.39	25.14	0.960	0.990
B	9.40	9.90	0.370	0.390
C	5.82	7.13	0.229	0.281
D	5.47	5.96	0.215	0.235
E	2.16	2.66	0.085	0.105
H	3.81	4.57	0.150	0.180
J	0.11	0.15	0.004	0.006
K	10.04	10.28	0.395	0.405
M	40°	50°	40°	50°
Q	2.88	3.30	0.113	0.130
R	6.23	6.47	0.245	0.255
S	20.07	20.57	0.790	0.810
U	18.29	18.54	0.720	0.730

CASE 211-07

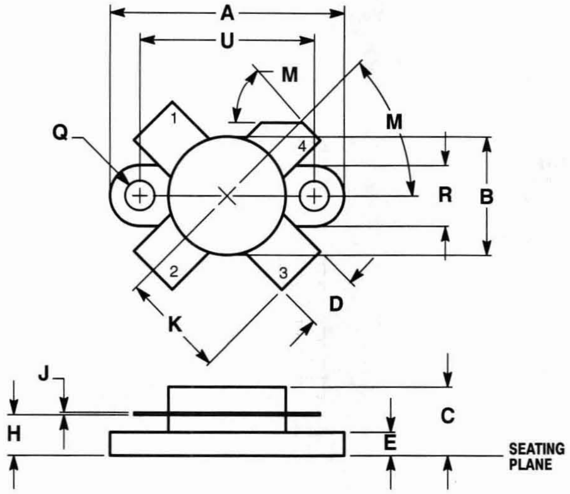

STYLE 1:
PIN 1. EMITTER
2. BASE
3. EMITTER
4. COLLECTOR

STYLE 2:
PIN 1. SOURCE
2. GATE
3. SOURCE
4. DRAIN

NOTES:
1. DIMENSIONING AND TOLERANCING PER ANSI Y14.5M, 1982.
2. CONTROLLING DIMENSION: INCH.
3. 211-04 AND -08 OBSOLETE, REPLACE BY NEW STANDARD 211-11.

	MILLIMETERS		INCHES	
DIM	MIN	MAX	MIN	MAX
A	24.39	25.14	0.960	0.990
B	11.82	12.95	0.465	0.510
C	5.82	6.98	0.229	0.275
D	5.49	5.96	0.216	0.235
E	2.14	2.79	0.084	0.110
H	3.66	4.52	0.144	0.178
J	0.08	0.17	0.003	0.007
K	11.05	—	0.435	—
M	45° NOM		45° NOM	
Q	2.93	3.30	0.115	0.130
R	6.25	6.47	0.246	0.255
U	18.29	18.54	0.720	0.730

CASE 211-11

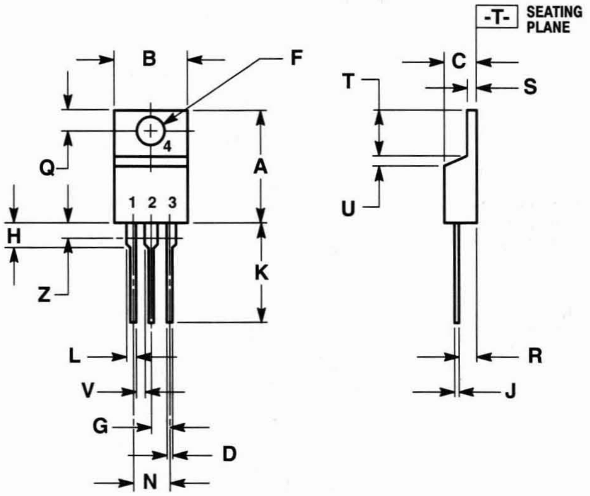

STYLE 1:
PIN 1. BASE
2. COLLECTOR
3. EMITTER
4. COLLECTOR

STYLE 2:
PIN 1. BASE
2. EMITTER
3. COLLECTOR
4. EMITTER

STYLE 3:
PIN 1. CATHODE
2. ANODE
3. GATE
4. ANODE

STYLE 4:
PIN 1. MAIN TERMINAL 1
2. MAIN TERMINAL 2
3. GATE
4. MAIN TERMINAL 2

NOTES:
1. DIMENSIONING AND TOLERANCING PER ANSI Y14.5M, 1982.
2. CONTROLLING DIMENSION: INCH.
3. DIM Z DEFINES A ZONE WHERE ALL BODY AND LEAD IRREGULARITIES ARE ALLOWED.
4. 221A-01 AND -02 OBSOLETE, NEW STANDARD 221A-04.

	MILLIMETERS		INCHES	
DIM	MIN	MAX	MIN	MAX
A	14.48	15.75	0.570	0.620
B	9.66	10.28	0.380	0.405
C	4.07	4.82	0.160	0.190
D	0.64	0.88	0.025	0.035
F	3.61	3.73	0.142	0.147
G	2.42	2.66	0.095	0.105
H	2.80	3.93	0.110	0.155
J	0.36	0.55	0.014	0.022
K	12.70	14.27	0.500	0.562
L	1.15	1.39	0.045	0.055
N	4.83	5.33	0.190	0.210
Q	2.54	3.04	0.100	0.120
R	2.04	2.79	0.080	0.110
S	1.15	1.39	0.045	0.055
T	5.97	6.47	0.235	0.255
U	0.00	1.27	0.000	0.050
V	1.15	—	0.045	—
Z	—	2.04	—	0.080

CASE 221A-04

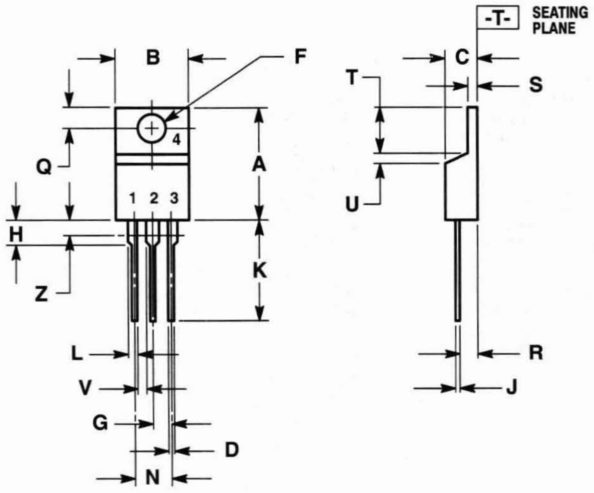

STYLE 4:
PIN 1. MAIN TERMINAL 1
2. MAIN TERMINAL 2
3. GATE
4. MAIN TERMINAL 2

STYLE 5:
PIN 1. GATE
2. DRAIN
3. SOURCE
4. DRAIN

STYLE 6:
PIN 1. ANODE
2. CATHODE
3. ANODE
4. CATHODE

NOTES:
1. DIMENSIONING AND TOLERANCING PER ANSI Y14.5M, 1982.
2. CONTROLLING DIMENSION: INCH.
3. DIM Z DEFINES A ZONE WHERE ALL BODY AND LEAD IRREGULARITIES ARE ALLOWED.

	MILLIMETERS		INCHES	
DIM	MIN	MAX	MIN	MAX
A	14.48	15.75	0.570	0.620
B	9.66	10.28	0.380	0.405
C	4.07	4.82	0.160	0.190
D	0.64	0.88	0.025	0.035
F	3.61	3.73	0.142	0.147
G	2.42	2.66	0.095	0.105
H	2.80	3.93	0.110	0.155
J	0.46	0.64	0.018	0.025
K	12.70	14.27	0.500	0.562
L	1.15	1.52	0.045	0.060
N	4.83	5.33	0.190	0.210
Q	2.54	3.04	0.100	0.120
R	2.04	2.79	0.080	0.110
S	1.15	1.39	0.045	0.055
T	5.97	6.47	0.235	0.255
U	0.00	1.27	0.000	0.050
V	1.15	—	0.045	—
Z	—	2.04	—	0.080

CASE 221A-06

PACKAGE OUTLINE DIMENSIONS AND FOOTPRINTS (continued)

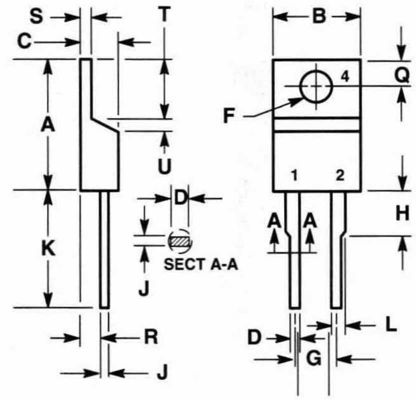

STYLE 1:
PIN 1. CATHODE
2. N/A
3. ANODE
4. CATHODE

DIM	MILLIMETERS MIN	MILLIMETERS MAX	INCHES MIN	INCHES MAX
A	15.11	15.75	0.595	0.620
B	9.65	10.29	0.380	0.405
C	4.06	4.82	0.160	0.190
D	0.64	0.89	0.025	0.035
F	3.61	3.73	0.142	0.147
G	4.83	5.33	0.190	0.210
H	2.79	3.30	0.110	0.130
J	0.36	0.56	0.014	0.022
K	12.70	14.27	0.500	0.562
L	1.14	1.27	0.045	0.050
Q	2.54	3.04	0.100	0.120
R	2.04	2.79	0.080	0.110
S	1.14	1.39	0.045	0.055
T	5.97	6.48	0.235	0.255
U	0.76	1.27	0.030	0.050

CASE 221B-01

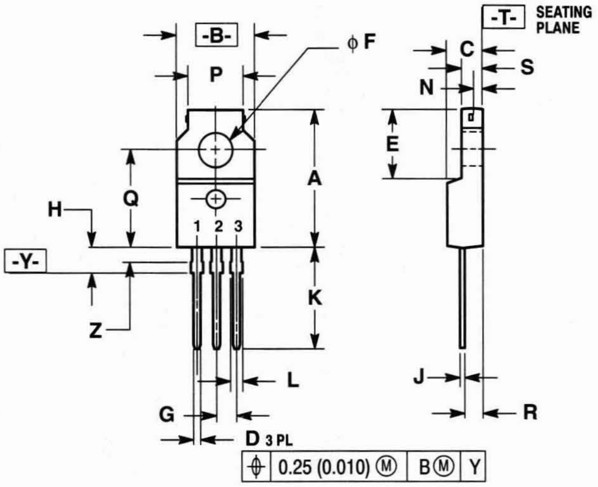

NOTES:
1. DIMENSIONING AND TOLERANCING PER ANSI Y14.5M, 1982.
2. CONTROLLING DIMENSION: INCH.
3. LEAD DIMENSIONS UNCONTROLLED WITHIN DIMENSION "Z".
4. 221C-01 OBSOLETE, NEW STANDARD 221C-02.

STYLE 2:
PIN 1. CATHODE
2. ANODE
3. GATE

STYLE 3:
PIN 1. MT 1
2. MT 2
3. GATE

DIM	MILLIMETERS MIN	MILLIMETERS MAX	INCHES MIN	INCHES MAX
A	17.28	17.78	0.680	0.700
B	9.86	10.36	0.388	0.408
C	4.45	4.95	0.175	0.195
D	0.64	1.01	0.025	0.040
E	8.64	9.01	0.340	0.355
F	3.56	3.81	0.140	0.150
G	2.54 BSC		0.100 BSC	
H	2.80	3.93	0.110	0.155
J	0.46	0.71	0.018	0.028
K	12.70	13.97	0.500	0.550
L	1.15	1.77	0.045	0.070
N	1.25	—	0.049	—
P	6.86	7.36	0.270	0.290
Q	12.20	12.70	0.480	0.500
R	2.29	3.04	0.090	0.120
S	2.67	2.92	0.105	0.115
Z	1.78	2.28	0.070	0.090

CASE 221C-02

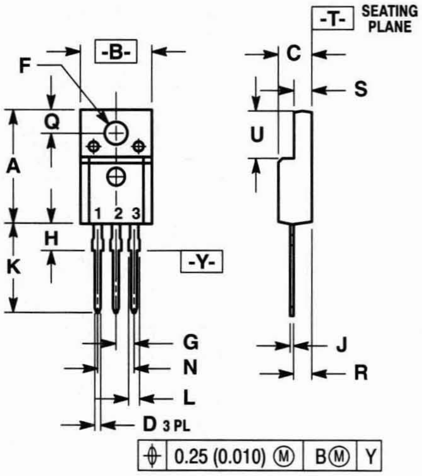

NOTES:
1. DIMENSIONING AND TOLERANCING PER ANSI Y14.5M, 1982.
2. CONTROLLING DIMENSION: INCH.
3. 221D-01 OBSOLETE, NEW STANDARD 221D-02.

STYLE 1:
PIN 1. GATE
2. DRAIN
3. SOURCE

STYLE 2:
PIN 1. BASE
2. COLLECTOR
3. EMITTER

STYLE 3:
PIN 1. ANODE
2. CATHODE
3. ANODE

DIM	MILLIMETERS MIN	MILLIMETERS MAX	INCHES MIN	INCHES MAX
A	15.78	15.97	0.621	0.629
B	10.01	10.21	0.394	0.402
C	4.60	4.80	0.181	0.189
D	0.67	0.86	0.026	0.034
F	3.08	3.27	0.121	0.129
G	2.54 BSC		0.100 BSC	
H	3.13	3.27	0.123	0.129
J	0.46	0.64	0.018	0.025
K	12.70	14.27	0.500	0.562
L	1.14	1.52	0.045	0.060
N	5.08 BSC		0.200 BSC	
Q	3.21	3.40	0.126	0.134
R	2.72	2.81	0.107	0.111
S	2.44	2.64	0.096	0.104
U	6.58	6.78	0.259	0.267

CASE 221D-02

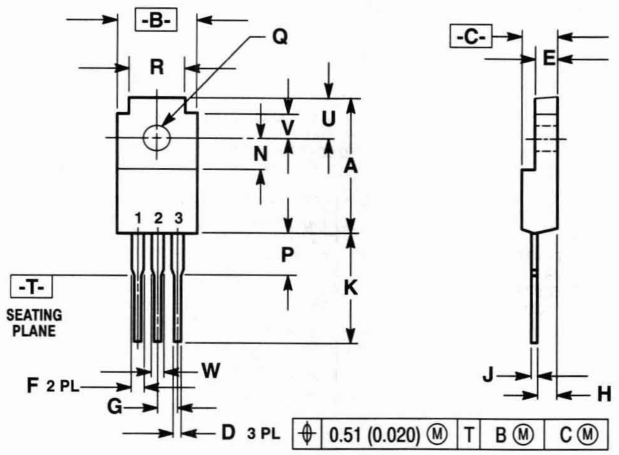

STYLE 1:
PIN 1. BASE
2. COLLECTOR
3. EMITTER

NOTES:
1. DIMENSIONING AND TOLERANCING PER ANSI Y14.5M, 1982.
2. CONTROLLING DIMENSION: MILLIMETER.

DIM	MILLIMETERS		INCHES	
	MIN	MAX	MIN	MAX
A	16.7	17.3	0.657	0.681
B	9.7	10.3	0.382	0.406
C	4.3	4.7	0.169	0.185
D	0.61	1.01	0.024	0.040
E	2.6	3.0	0.102	0.118
F	0.9	1.5	0.035	0.059
G	2.54 BSC		0.100 BSC	
H	2.4	2.8	0.094	0.110
J	0.40	0.75	0.015	0.030
K	13.4	—	0.528	—
N	3.7	4.1	0.146	0.161
P	5.0	5.6	0.197	0.220
Q	3.0	3.4	0.118	0.134
R	6.8	7.2	0.267	0.283
U	4.8	5.2	0.189	0.205
V	2.9	3.3	0.114	0.130
W	1.1	1.7	0.043	0.067

CASE 221H-01

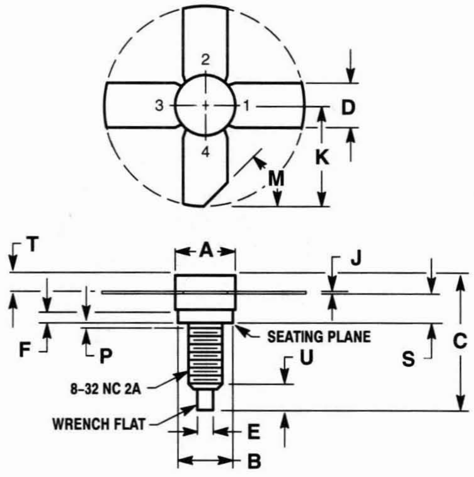

STYLE 1:
PIN 1. EMITTER
2. BASE
3. EMITTER
4. COLLECTOR

STYLE 3:
PIN 1. SOURCE
2. GATE
3. SOURCE
4. DRAIN

STYLE 4:
PIN 1. BASE
2. EMITTER
3. BASE
4. COLLECTOR

NOTES:
1. 244-01 THRU -03 OBSOLETE, REPLACED BY NEW STANDARD 244-04.

DIM	MILLIMETERS		INCHES	
	MIN	MAX	MIN	MAX
A	7.06	7.26	0.278	0.286
B	6.20	6.50	0.244	0.256
C	14.99	16.51	0.590	0.650
D	5.46	5.96	0.215	0.235
E	1.40	1.65	0.055	0.065
F	1.52	—	0.060	—
J	0.08	0.17	0.003	0.007
K	11.05	—	0.435	—
M	45° NOM		45° NOM	
P	—	1.27	—	0.050
S	3.00	3.25	0.118	0.128
T	1.40	1.77	0.055	0.070
U	2.92	3.68	0.115	0.145

CASE 244-04

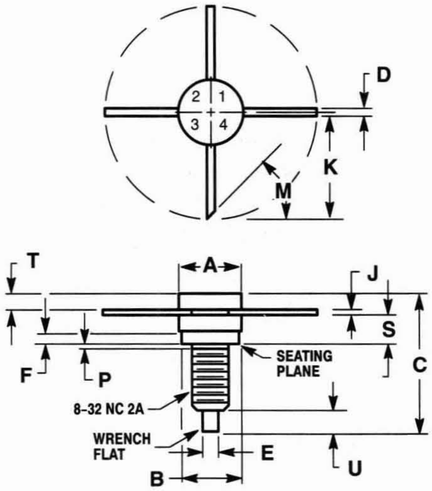

STYLE 1:
PIN 1. EMITTER
2. BASE
3. EMITTER
4. COLLECTOR

STYLE 3:
PIN 1. BASE
2. EMITTER
3. BASE
4. COLLECTOR

DIM	MILLIMETERS		INCHES	
	MIN	MAX	MIN	MAX
A	7.06	7.26	0.278	0.286
B	6.20	6.50	0.244	0.256
C	15.24	16.51	0.600	0.650
D	0.66	0.86	0.026	0.034
E	1.40	1.65	0.055	0.065
F	1.52	—	0.060	—
J	0.10	0.15	0.004	0.006
K	11.17	—	0.440	—
M	45° NOM		45° NOM	
P	—	1.27	—	0.050
S	2.74	3.35	0.108	0.132
T	1.40	1.78	0.055	0.070
U	2.92	3.68	0.115	0.145

CASE 244A-01

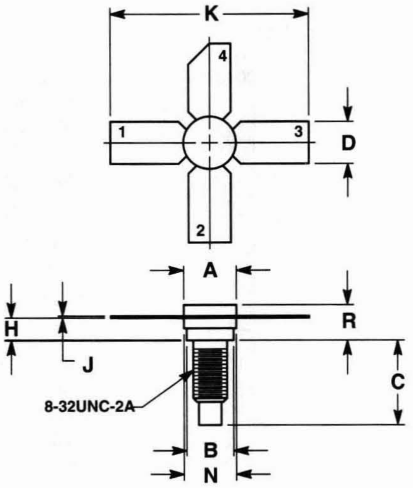

STYLE 1:
PIN 1. EMITTER
2. BASE
3. EMITTER
4. COLLECTOR

NOTES:
1. DIMENSIONING AND TOLERANCING PER ANSI Y14.5M, 1982.
2. CONTROLLING DIMENSION: INCH.
3. 244C-01 OBSOLETE, NEW STANDARD 244C-02.

DIM	MILLIMETERS		INCHES	
	MIN	MAX	MIN	MAX
A	6.88	7.14	0.271	0.281
B	6.22	6.48	0.245	0.255
C	11.05	11.81	0.435	0.465
D	5.59	5.84	0.220	0.230
H	2.87	3.12	0.113	0.123
J	0.10	0.15	0.004	0.006
K	25.40	26.92	1.000	1.060
N	6.93	7.19	0.273	0.283
R	4.45	5.00	0.175	0.197

CASE 244C-02

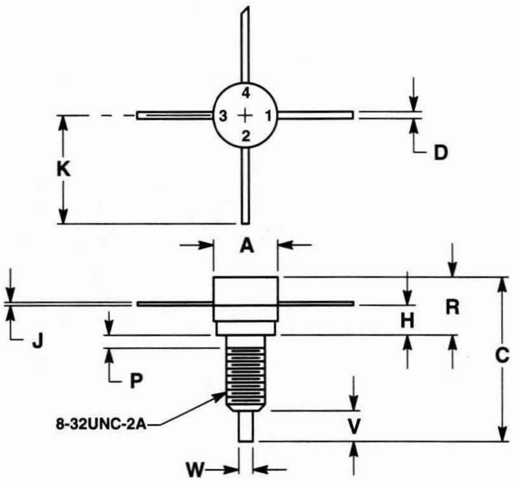

STYLE 1:
PIN 1. EMITTER
2. BASE
3. EMITTER
4. COLLECTOR

STYLE 2:
PIN 1. BASE
2. EMITTER
3. BASE
4. COLLECTOR

NOTES:
1. DIMENSIONING AND TOLERANCING PER ANSI Y14.5M, 1982.
2. CONTROLLING DIMENSION: INCH.

DIM	MILLIMETERS		INCHES	
	MIN	MAX	MIN	MAX
A	6.74	7.23	0.265	0.285
C	14.94	16.23	0.588	0.639
D	0.64	0.88	0.025	0.035
H	2.65	3.40	0.104	0.134
J	0.11	0.15	0.004	0.006
K	11.18	11.68	0.440	0.460
P	1.40	1.65	0.055	0.065
R	5.21	6.35	0.205	0.250
V	2.93	3.68	0.115	0.145
W	1.40	1.65	0.055	0.065

CASE 244D-01

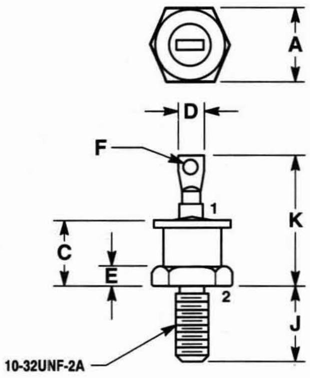

STYLE 2:
PIN 1. ANODE
2. CATHODE

NOTES:
1. DIMENSIONING AND TOLERANCING PER ANSI Y14.5M, 1982.
2. CONTROLLING DIMENSION: INCH.

DIM	MILLIMETERS		INCHES	
	MIN	MAX	MIN	MAX
A	10.75	11.12	0.423	0.438
C	—	10.28	—	0.405
D	4.07	4.69	0.160	0.185
E	1.91	4.44	0.075	0.175
F	2.29	2.41	0.090	0.095
J	10.72	11.50	0.422	0.453
K	18.80	20.32	0.740	0.800

CASE 245A-02

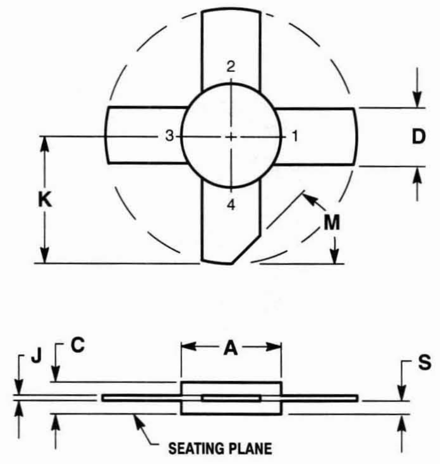

STYLE 1:
PIN 1. EMITTER
2. BASE
3. EMITTER
4. COLLECTOR

NOTE:
1. 249-01 THRU 249-04 ARE OBSOLETE, REPLACED BY NEW STANDARD 249-05.

DIM	MILLIMETERS MIN	MILLIMETERS MAX	INCHES MIN	INCHES MAX
A	7.06	7.26	0.278	0.286
C	2.84	3.45	0.112	0.136
D	5.46	5.97	0.215	0.235
J	0.08	0.18	0.003	0.007
K	11.05	—	0.435	—
M	45° NOM		45° NOM	
S	1.40	1.65	0.055	0.065

CASE 249-05

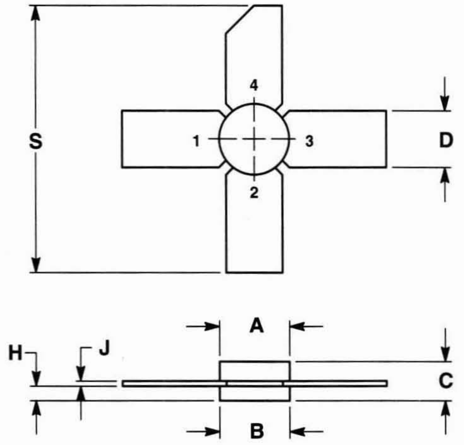

STYLE 1:
PIN 1. EMITTER
2. BASE
3. EMITTER
4. COLLECTOR

NOTES:
1. DIMENSIONING AND TOLERANCING PER ANSI Y14.5M, 1982.
2. CONTROLLING DIMENSION: INCH.
3. 249A-01 OBSOLETE, NEW STANDARD 249A-02.

DIM	MILLIMETERS MIN	MILLIMETERS MAX	INCHES MIN	INCHES MAX
A	6.88	7.14	0.271	0.281
B	6.93	7.19	0.273	0.283
C	2.92	3.48	0.115	0.137
D	5.59	5.84	0.220	0.230
H	1.35	1.60	0.053	0.063
J	0.10	0.18	0.004	0.007
S	25.65	26.16	1.010	1.030

CASE 249A-02

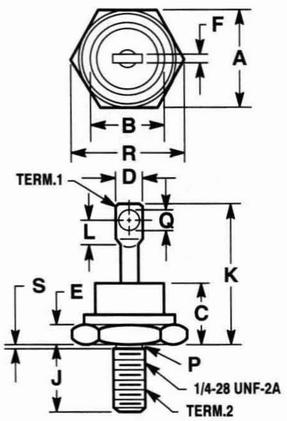

STYLE 2:
TERM.1. ANODE
2. CATHODE (CASE)

NOTES:
1. DIM "P" IS DIA.
2. CHAMFER OR UNDERCUT ON ONE OR BOTH ENDS OF HEXAGONAL BASE IS OPTIONAL.
3. ANGULAR ORIENTATION AND CONTOUR OF TERMINAL ONE IS OPTIONAL.
4. THREADS ARE PLATED.
5. DIMENSIONING AND TOLERANCING PER ANSI Y14.5, 1973.

DIM	MILLIMETERS MIN	MILLIMETERS MAX	INCHES MIN	INCHES MAX
A	16.94	17.45	0.669	0.687
B	—	16.94	—	0.667
C	—	11.43	—	0.450
D	—	9.53	—	0.375
E	2.92	5.08	0.115	0.200
F	—	2.03	—	0.080
J	10.72	11.51	0.422	0.453
K	—	25.40	—	1.000
L	3.86	—	0.156	—
P	5.59	6.32	0.220	0.249
Q	3.56	4.45	0.140	0.175
R	—	20.16	—	0.794
S	—	2.26	—	0.089

CASE 257-01

PACKAGE OUTLINE DIMENSIONS AND FOOTPRINTS (continued)

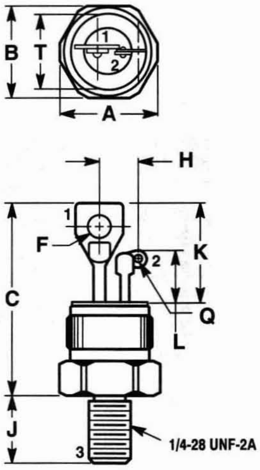

STYLE 1:
PIN 1. CATHODE
2. GATE
3. ANODE

STYLE 2:
PIN 1. MT 1
2. GATE
3. MT 2

	MILLIMETERS		INCHES	
DIM	MIN	MAX	MIN	MAX
A	15.34	15.60	0.604	0.614
B	14.00	14.20	0.551	0.559
C	2.67	30.23	1.050	1.190
F	3.43	4.06	0.135	0.160
H	—	6.73	—	0.265
J	10.67	11.56	0.420	0.455
K	15.75	17.02	0.620	0.670
L	7.62	8.89	0.300	0.350
Q	1.40	2.16	0.055	0.085
T	12.73	12.83	0.501	0.505

CASE 263-04

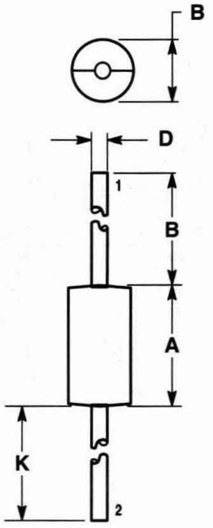

STYLE 1:
PIN 1. CATHODE
2. ANODE

NOTES:
1. DIMENSIONING AND TOLERANCING PER ANSI Y14.5M, 1982.
2. CONTROLLING DIMENSION: INCH.

	MILLIMETERS		INCHES	
DIM	MIN	MAX	MIN	MAX
A	9.40	9.65	0.370	0.380
B	4.83	5.33	0.190	0.210
D	1.22	1.32	0.048	0.052
K	25.40	—	1.000	—

CASE 267-03

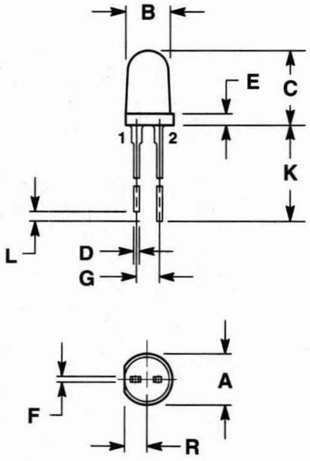

STYLE 1:
PIN 1. CATHODE
2. ANODE

NOTES:
1. DIMENSIONING AND TOLERANCING PER ANSI Y14.5M, 1982.
2. CONTROLLING DIMENSION: INCH.

	MILLIMETERS		INCHES	
DIM	MIN	MAX	MIN	MAX
A	5.52	5.96	0.217	0.235
B	4.80	5.20	0.189	0.205
C	8.13	9.14	0.320	0.360
D	0.51	0.71	0.020	0.028
E	1.15	1.39	0.045	0.055
F	0.51	0.76	0.020	0.030
G	2.29	2.79	0.090	0.110
K	25.40	26.67	1.00	1.05
L	0.18	1.82	0.007	0.072
R	2.42	2.79	0.095	0.110

CASE 279B-01

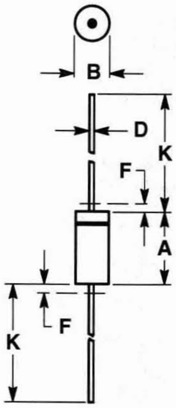

NOTES:
1. PACKAGE CONTOUR OPTIONAL WITHIN A AND B HEAT SLUGS, IF ANY, SHALL BE INCLUDED WITHIN THIS CYLINDER, BUT NOT SUBJECT TO THE MINIMUM LIMIT OF B.
2. LEAD DIAMETER NOT CONTROLLED IN ZONE F TO ALLOW FOR FLASH, LEAD FINISH BUILDUP AND MINOR IRREGULARITIES OTHER THAN HEAT SLUGS.
3. POLARITY DENOTED BY CATHODE BAND.
4. DIMENSIONING AND TOLERANCING PER ANSI Y14.5, 1973.

	MILLIMETERS		INCHES	
DIM	MIN	MAX	MIN	MAX
A	3.05	5.08	0.120	0.200
B	1.52	2.29	0.060	0.090
D	0.46	0.56	0.018	0.022
F	—	1.27	—	0.050
K	25.40	38.10	1.000	1.500

All JEDEC dimensions and notes apply.

CASE 299-02

NOTES:
1. DIMENSIONING AND TOLERANCING PER ANSI Y14.5M, 1982.
2. CONTROLLING DIMENSION: INCH.
3. DIMENSION F TO CENTER OF LEADS.

STYLE 1:
PIN 1. RF INPUT
2. V_{BIAS} (8 V)
3. V_{CC2} (12.5 V)
4. V_{CC3} (12.5 V)
5. RF OUTPUT

	MILLIMETERS		INCHES	
DIM	MIN	MAX	MIN	MAX
A	55.63	56.13	2.190	2.210
B	35.44	35.94	1.395	1.415
C	9.02	9.65	0.355	0.380
D	0.46	0.55	0.018	0.022
E	3.05	3.42	0.120	0.135
F	4.16 BSC		0.164 BSC	
G	48.26 BSC		1.900 BSC	
H	43.18 BSC		1.700 BSC	
J	8.77	9.77	0.345	0.385
K	5.72	----	0.225	----
N	40.64 BSC		1.600 BSC	
P	0.21	0.30	0.008	0.012
Q	3.81	4.06	0.150	0.160
R	17.53	19.55	0.690	0.770
S	15.12	15.62	0.595	0.615
V	17.78 BSC		0.700 BSC	
W	15.24 BSC		0.600 BSC	
X	12.70 BSC		0.500 BSC	

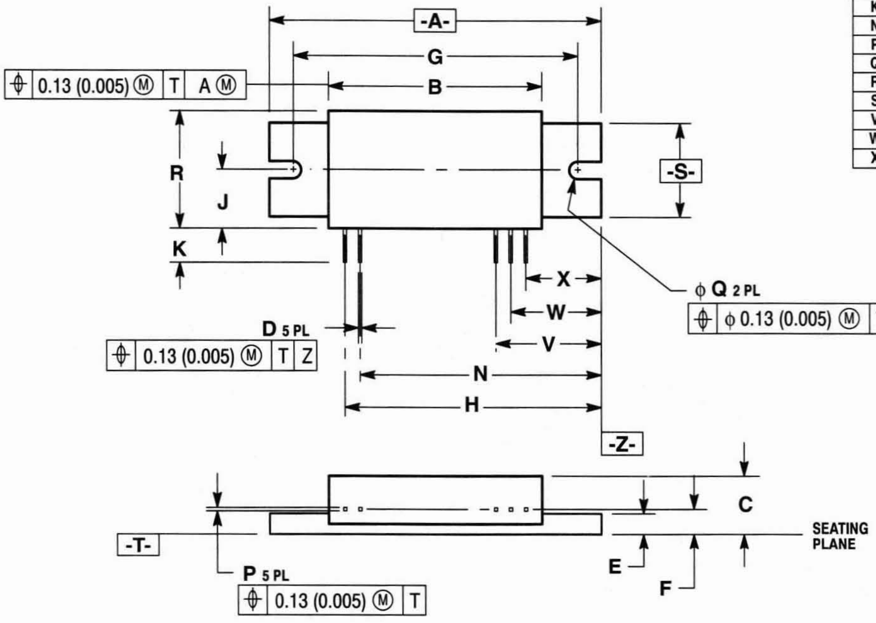

CASE 301AA-01

STYLE 1:
PIN 1. RF INPUT
2. +DC (BIAS)
3. +DC (SUPPLY)
4. +DC (SUPPLY)
5. RF OUTPUT

NOTES:
1. DIMENSIONING AND TOLERANCING PER ANSI Y14.5M, 1982.
2. CONTROLLING DIMENSION: INCH.
3. DIMENSION F TO CENTER OF LEADS.

DIM	MILLIMETERS		INCHES	
	MIN	MAX	MIN	MAX
A	55.63	56.13	2.190	2.210
B	35.44	35.94	1.395	1.415
C	9.02	9.65	0.355	0.380
D	0.46	0.55	0.018	0.022
E	3.05	3.42	0.120	0.135
F	4.16 BSC		0.164 BSC	
G	48.26 BSC		1.900 BSC	
H	43.18 BSC		1.700 BSC	
J	8.77	9.77	0.345	0.385
K	5.72	----	0.225	----
N	40.64 BSC		1.600 BSC	
P	0.21	0.30	0.008	0.012
Q	3.81	4.06	0.150	0.160
R	17.53	19.55	0.690	0.770
S	15.12	15.62	0.595	0.615
V	17.78 BSC		0.700 BSC	
W	15.24 BSC		0.600 BSC	
X	12.70 BSC		0.500 BSC	

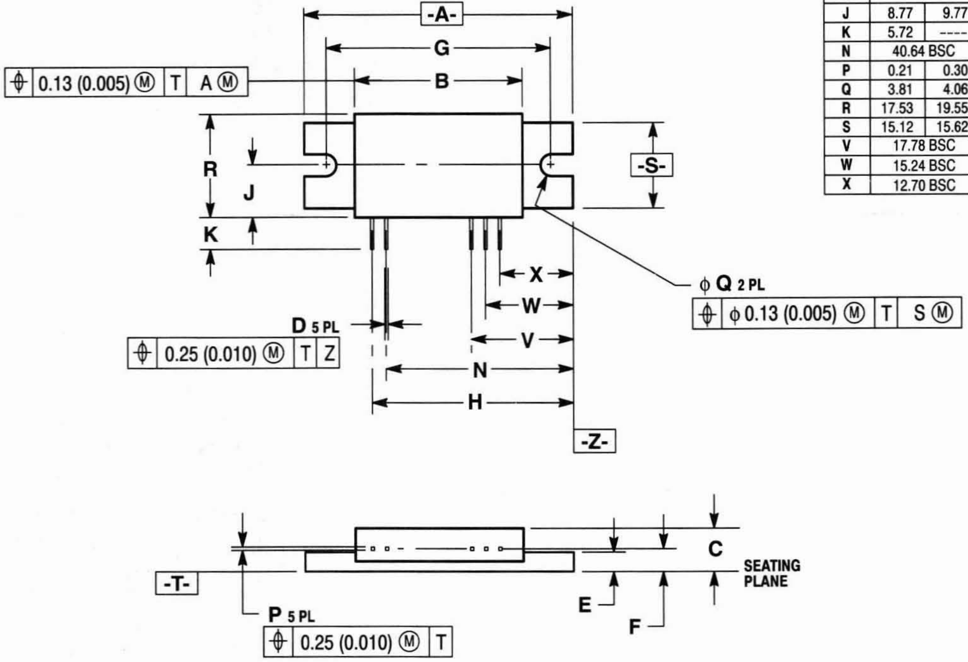

CASE 301AB-01

STYLE 1:
PIN 1. RF INPUT/V CONT
2. VS1
3. VS2
4. VS3
5. RF OUTPUT
CASE: GROUND

NOTES:
1. DIMENSIONING AND TOLERANCING PER ANSI Y14.5M, 1982.
2. CONTROLLING DIMENSION: INCH.
3. DIMENSION F TO CENTER OF LEADS.

DIM	MILLIMETERS		INCHES	
	MIN	MAX	MIN	MAX
A	44.71	45.21	1.760	1.780
B	34.80	35.30	1.370	1.390
C	6.23	6.73	0.245	0.265
D	0.46	0.55	0.018	0.022
E	2.04	2.54	0.080	0.100
F	3.30 BSC		0.130 BSC	
G	41.91 BSC		1.650 BSC	
H	37.72 BSC		1.485 BSC	
J	6.79	7.06	0.267	0.278
K	5.85	7.62	0.230	0.300
L	19.94 BSC		0.785 BSC	
N	32.64 BSC		1.285 BSC	
P	0.21	0.30	0.008	0.012
Q	3.05	3.30	0.120	0.130
R	13.59	14.09	0.535	0.555
S	11.31	11.81	0.445	0.465
V	17.40 BSC		0.685 BSC	
X	9.78 BSC		0.385 BSC	

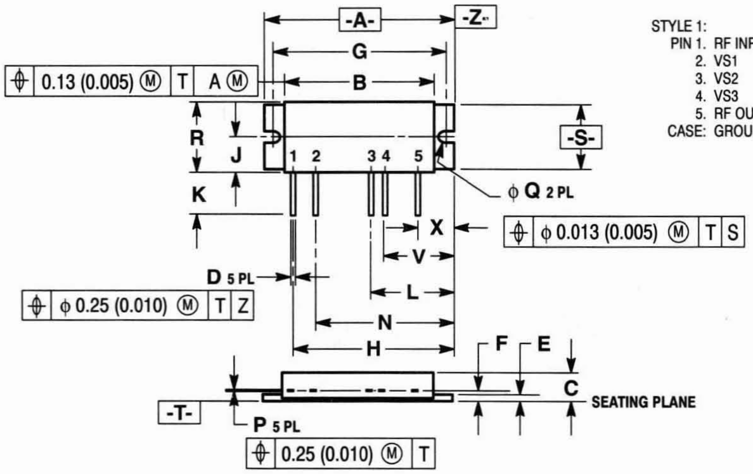

CASE 301E-04

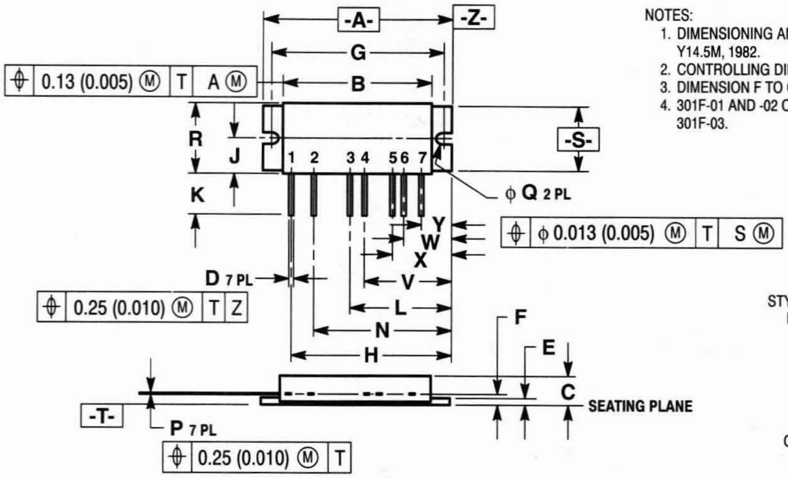

NOTES:
1. DIMENSIONING AND TOLERANCING PER ANSI Y14.5M, 1982.
2. CONTROLLING DIMENSION: INCH.
3. DIMENSION F TO CENTER OF LEADS.
4. 301F-01 AND -02 OBSOLETE, NEW STANDARD 301F-03.

STYLE 1:
PIN 1. RF INPUT/V CONT
2. VS1
3. VS2
4. VS3
5. VS4
6. VS5
7. RF OUTPUT
CASE: GROUND

DIM	MILLIMETERS MIN	MILLIMETERS MAX	INCHES MIN	INCHES MAX
A	60.46	60.83	2.380	2.395
B	50.04	50.54	1.970	1.990
C	6.35	6.73	0.250	0.265
D	0.46	0.55	0.018	0.022
E	2.16	2.54	0.085	0.100
F	3.35 BSC		0.132 BSC	
G	57.40 BSC		2.260 BSC	
H	51.87 BSC		2. 042 BSC	
J	6.78	7.06	0.267	0.278
K	5.85	7.62	0.230	0.300
L	31.55 BSC		1.242 BSC	
N	44.25 BSC		1.742 BSC	
P	0.21	0.30	0.008	0.012
Q	3.05	3.30	0.120	0.130
R	13.59	14.09	0.535	0.555
S	11.31	11.81	0.445	0.465
V	29.01 BSC		1.142 BSC	
W	13.77 BSC		0.542 BSC	
X	16.31 BSC		0.642 BSC	
Y	8.69 BSC		0.342 BSC	

CASE 301F-03

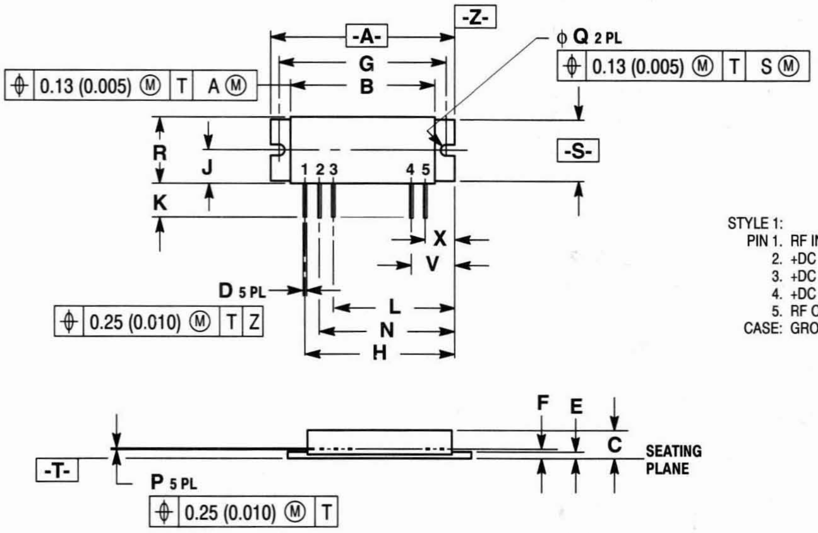

NOTES:
1. DIMENSIONING AND TOLERANCING PER ANSI Y14.5M, 1982.
2. CONTROLLING DIMENSION: INCH.
3. DIMENSION F TO CENTER OF LEADS.
4. 301G-01 AND -02 OBSOLETE, REPLACED BY NEW STANDARD 301G-03.

STYLE 1:
PIN 1. RF INPUT
2. +DC
3. +DC
4. +DC
5. RF OUTPUT
CASE: GROUND

DIM	MILLIMETERS MIN	MILLIMETERS MAX	INCHES MIN	INCHES MAX
A	55.63	56.13	2.190	2.210
B	35.44	35.94	1.395	1.415
C	8.89	9.55	0.350	0.376
D	0.46	0.55	0.018	0.022
E	3.05	3.42	0.120	0.135
F	4.06 BSC		0.160 BSC	
G	48.26 BSC		1.900 BSC	
H	40.64 BSC		1.600 BSC	
J	8.77	9.77	0.345	0.385
K	5.72	—	0.225	—
L	35.56 BSC		1.400 BSC	
N	38.10 BSC		1.500 BSC	
P	0.21	0.30	0.008	0.012
Q	3.81	4.06	0.150	0.160
R	17.53	19.55	0.690	0.770
S	15.12	15.49	0.595	0.610
V	17.78 BSC		0.700 BSC	
X	12.70 BSC		0.500 BSC	

CASE 301G-03

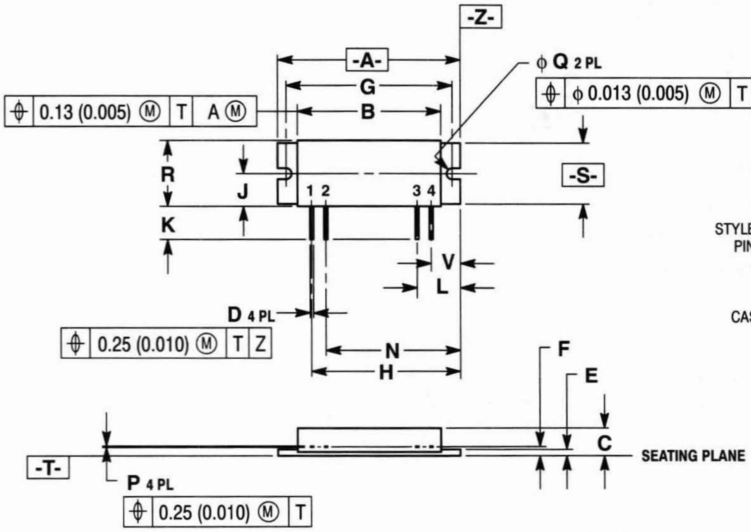

NOTES:
1. DIMENSIONING AND TOLERANCING PER ANSI Y14.5, 1982.
2. CONTROLLING DIMENSION: INCH.
3. DIMENSION F TO CENTER OF LEADS.
4. 301H-01 AND -02 OBSOLETE, REPLACED BY NEW STANDARD 301H-03.

STYLE 2:
PIN 1. RF INPUT
2. +DC (CONTROL)
3. +DC (SUPPLY)
4. RF OUTPUT
CASE: GROUND

DIM	MILLIMETERS MIN	MILLIMETERS MAX	INCHES MIN	INCHES MAX
A	48.01	48.51	1.890	1.910
B	29.72	30.22	1.170	1.190
C	8.89	9.55	0.350	0.376
D	0.46	0.55	0.018	0.022
E	3.05	3.42	0.120	0.135
F	4.06 BSC		0.160 BSC	
G	40.64 BSC		1.600 BSC	
H	35.56 BSC		1.400 BSC	
J	8.77	9.77	0.345	0.385
K	5.72	—	0.225	—
L	17.78 BSC		0.700 BSC	
N	33.02 BSC		1.300 BSC	
P	0.21	0.30	0.008	0.012
Q	3.81	4.06	0.150	0.160
R	17.40	19.55	0.685	0.770
S	15.12	15.49	0.595	0.610
V	12.70 BSC		0.500 BSC	

CASE 301H-03

STYLE 1:
PIN 1. RF INPUT
2. VSI
3. VCONT
4. VS2
5. VS3
6. VS4
7. RF OUTPUT
CASE: GROUND

NOTES:
1. DIMENSIONING AND TOLERANCING PER ANSI Y14.5M, 1982.
2. CONTROLLING DIMENSION: INCH.
3. 301J-01 OBSOLETE, NEW STANDARD 301J-02.

DIM	MILLIMETERS		INCHES	
	MIN	MAX	MIN	MAX
A	44.84	42.21	1.765	1.780
B	34.80	35.30	1.370	1.390
C	6.35	6.73	0.250	0.265
D	0.46	0.55	0.018	0.022
E	2.16	2.54	0.085	0.100
F	3.35 BSC		0.132 BSC	
G	42.02 BSC		1.654 BSC	
H	37.77 BSC		1.487 BSC	
J	6.79	7.06	0.267	0.278
K	3.81	11.43	0.150	0.450
L	32.69 BSC		1.287 BSC	
N	35.23 BSC		1.387 BSC	
P	0.21	0.30	0.008	0.012
Q	3.05	3.30	0.120	0.130
R	13.59	14.09	0.535	0.555
S	11.31	11.81	0.445	0.465
V	30.15 BSC		1.187 BSC	
W	19.99 BSC		0.787 BSC	
X	25.07 BSC		0.987 BSC	
Y	14.91 BSC		0.587 BSC	

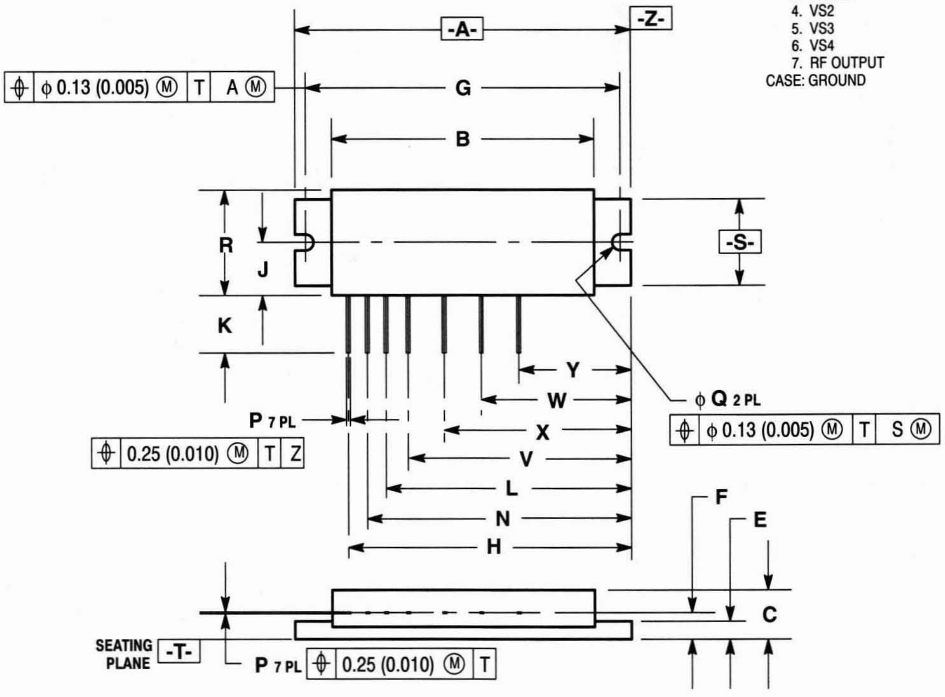

CASE 301J-02

STYLE 3:
PIN 1. RF INPUT
2. VS1
3. VCONT
4. VS2
5. VS3
6. RF OUTPUT
CASE: GROUND

NOTES:
1. DIMENSIONING AND TOLERANCING PER ANSI Y14.5M, 1982.
2. CONTROLLING DIMENSION: INCH.
3. DIMENSION F TO CENTER OF LEADS.
4. 301K-01 OBSOLETE, REPLACED BY NEW STANDARD 301K-02.

DIM	MILLIMETERS		INCHES	
	MIN	MAX	MIN	MAX
A	44.96	45.34	1.770	1.785
B	34.80	35.31	1.370	1.390
C	6.35	6.73	0.250	0.265
D	0.46	0.55	0.018	0.022
E	2.16	2.54	0.085	0.100
F	3.35 BSC		0.132 BSC	
G	42.04 BSC		1.655 BSC	
H	37.85 BSC		1.490 BSC	
J	6.78	7.06	0.267	0.278
K	5.85	7.62	0.230	0.300
L	25.15 BSC		0.990 BSC	
N	32.77 BSC		1.290 BSC	
P	0.21	0.30	0.008	0.012
Q	3.05	3.30	0.120	0.130
R	13.59	14.09	0.535	0.555
S	11.31	11.81	0.445	0.465
V	22.61 BSC		0.890 BSC	
W	7.24 BSC		0.285 BSC	
X	9.91 BSC		0.390 BSC	

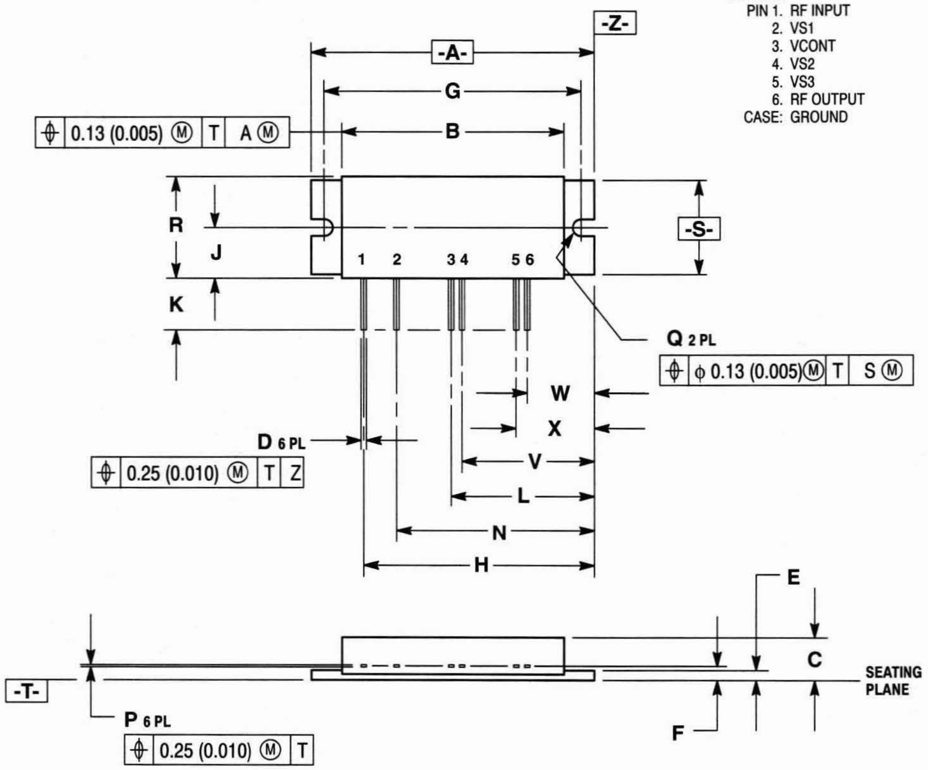

CASE 301K-02

PACKAGE OUTLINE DIMENSIONS AND FOOTPRINTS (continued)

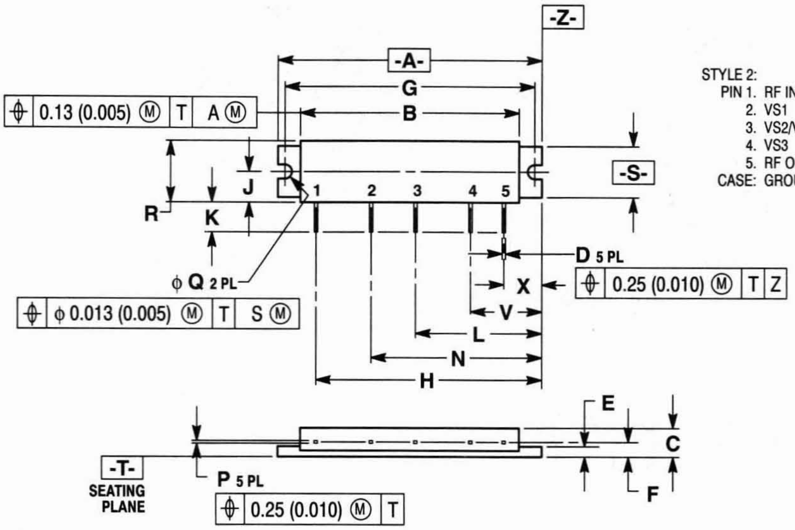

STYLE 2:
PIN 1. RF INPUT
2. VS1
3. VS2/VCONT
4. VS3
5. RF OUTPUT
CASE: GROUND

NOTES:
1. DIMENSIONING AND TOLERANCING PER ANSI Y14.5M, 1982.
2. CONTROLLING DIMENSION: INCH.
3. DIMENSION F TO CENTER OF LEADS.
4. 301L-01 OBSOLETE, REPLACED BY NEW STANDARD 301L-02.

DIM	MILLIMETERS		INCHES	
	MIN	MAX	MIN	MAX
A	60.46	60.83	2.380	2.395
B	50.04	50.54	1.970	1.990
C	6.35	6.73	0.250	0.265
D	0.46	0.55	0.018	0.022
E	2.16	2.54	0.085	0.100
F	3.35 BSC		0.132 BSC	
G	57.40 BSC		2.260 BSC	
H	51.87 BSC		2.042 BSC	
J	6.78	7.06	0.267	0.278
K	4.49	5.51	0.177	0.217
L	29.01 BSC		1.142 BSC	
N	39.17 BSC		1.542 BSC	
P	0.21	0.30	0.008	0.012
Q	3.05	3.30	0.120	0.130
R	13.59	14.09	0.535	0.555
S	11.31	11.81	0.445	0.465
V	16.31 BSC		0.642 BSC	
X	8.69 BSC		0.342 BSC	

CASE 301L-02

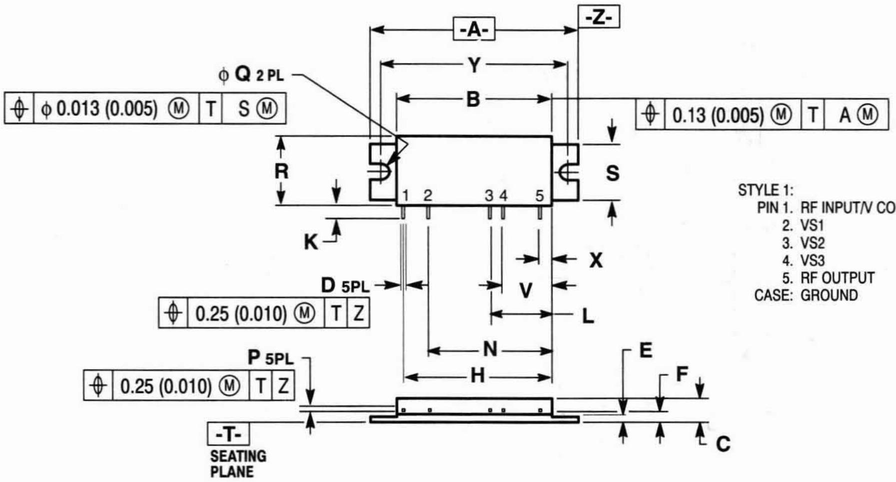

STYLE 1:
PIN 1. RF INPUT/V CONT
2. VS1
3. VS2
4. VS3
5. RF OUTPUT
CASE: GROUND

NOTES:
1. DIMENSIONS AND TOLERANCING PER ANSI Y14.5M, 1982.
2. CONTROLLING DIMENSION: INCH.
3. DIMENSION F TO CENTER OF LEADS.

DIM	MILLIMETERS		INCHES	
	MIN	MAX	MIN	MAX
A	42.80	43.05	1.685	1.695
B	32.01	32.38	1.260	1.275
C	4.45	4.57	0.175	0.180
D	0.46	0.55	0.018	0.022
E	1.02	1.14	0.040	0.045
F	1.96	2.41	0.077	0.095
H	30.61 BSC		1.205 BSC	
K	2.54	—	0.100	—
L	12.83 BSC		0.505 BSC	
N	25.53 BSC		1.005 BSC	
P	0.21	0.30	0.008	0.012
Q	3.05	3.30	0.120	0.130
R	13.85	14.22	0.545	0.560
S	11.43	11.68	0.450	0.460
V	10.29 BSC		0.405 BSC	
X	2.67 BSC		0.105 BSC	
Y	38.99 BSC		1.535 BSC	

CASE 301N-01

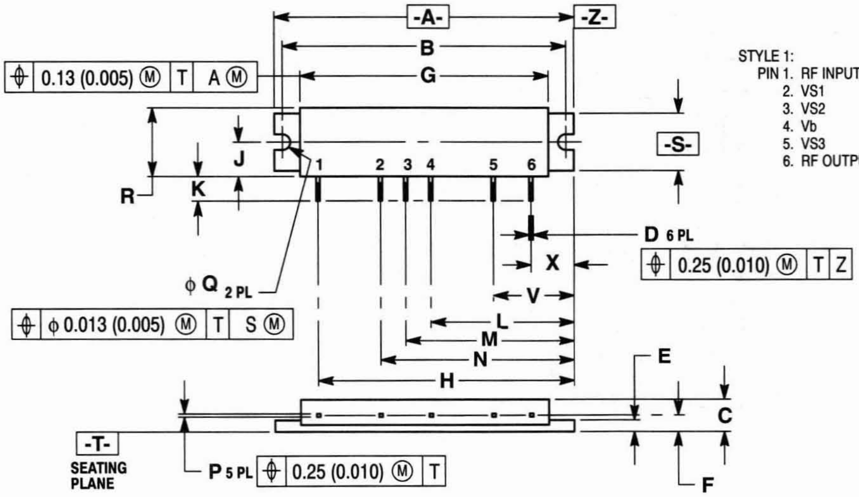

STYLE 1:
PIN 1. RF INPUT/VCONT
2. VS1
3. VS2
4. Vb
5. VS3
6. RF OUTPUT

NOTES:
1. DIMENSIONING AND TOLERANCING PER ANSI Y14.5M, 1982.
2. CONTROLLING DIMENSION: INCH.
3. DIMENSION F TO CENTER OF LEADS.

DIM	MILLIMETERS		INCHES	
	MIN	MAX	MIN	MAX
A	60.46	60.83	2.380	2.395
B	50.04	50.54	1.970	1.990
C	6.35	6.73	0.250	0.265
D	0.46	0.55	0.018	0.022
E	2.16	2.54	0.085	0.100
F	3.35 BSC		0.132 BSC	
G	57.40 BSC		2.260 BSC	
H	51.87 BSC		2.042 BSC	
J	6.78	7.06	0.267	0.278
K	4.49	5.51	0.177	0.217
L	29.01 BSC		1.142 BSC	
M	34.09 BSC		1.342 BSC	
N	39.17 BSC		1.542 BSC	
P	0.21	0.30	0.008	0.012
Q	3.05	3.30	0.120	0.130
R	13.59	14.09	0.535	0.555
S	11.31	11.81	0.445	0.465
V	16.31 BSC		0.642 BSC	
X	8.69 BSC		0.342 BSC	

CASE 301R-01

PACKAGE OUTLINE DIMENSIONS AND FOOTPRINTS (continued)

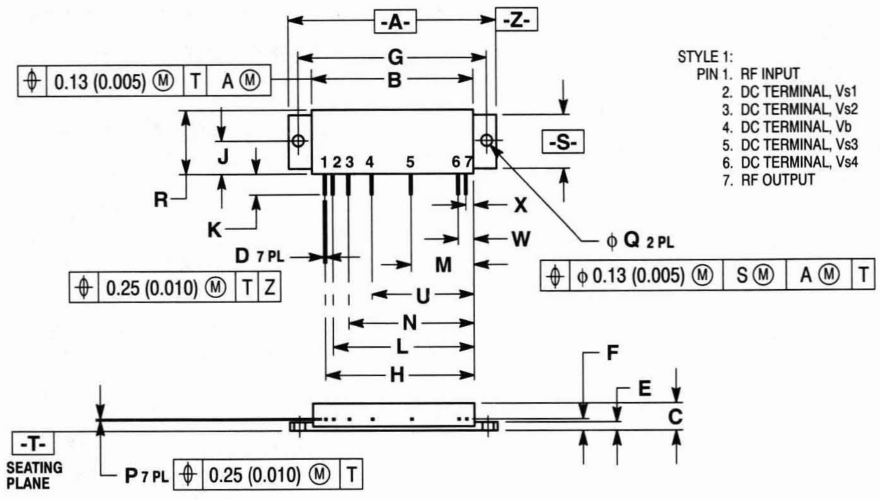

STYLE 1:
PIN 1. RF INPUT
2. DC TERMINAL, Vs1
3. DC TERMINAL, Vs2
4. DC TERMINAL, Vb
5. DC TERMINAL, Vs3
6. DC TERMINAL, Vs4
7. RF OUTPUT

NOTES:
1. DIMENSIONING AND TOLERANCING PER ANSI Y14.5M, 1982.
2. CONTROLLING DIMENSION: INCH.
3. DIMENSION F TO CENTER OF LEADS.
4. 301S-01 OBSOLETE, NEW STANDARD 301S-02.

	MILLIMETERS		INCHES	
DIM	MIN	MAX	MIN	MAX
A	67.06	67.56	2.640	2.660
B	51.82	52.95	2.040	2.085
C	8.51	9.14	0.335	0.360
D	0.46	0.56	0.018	0.022
E	2.54	2.92	0.100	0.115
F	3.73 BSC		0.147 BSC	
G	61.09 BSC		2.405 BSC	
H	48.26 BSC		1.900 BSC	
J	10.16	11.18	0.400	0.440
K	4.50	5.51	0.177	0.217
L	45.72 BSC		1.800 BSC	
M	20.32 BSC		0.800 BSC	
N	40.64 BSC		1.600 BSC	
P	0.21	0.30	0.008	0.012
Q	3.45	3.71	0.136	0.146
R	20.32	20.83	0.800	0.820
S	17.02	17.53	0.670	0.690
U	33.02 BSC		1.300 BSC	
W	5.08 BSC		0.200 BSC	
X	2.54 BSC		0.100 BSC	

CASE 301S-02

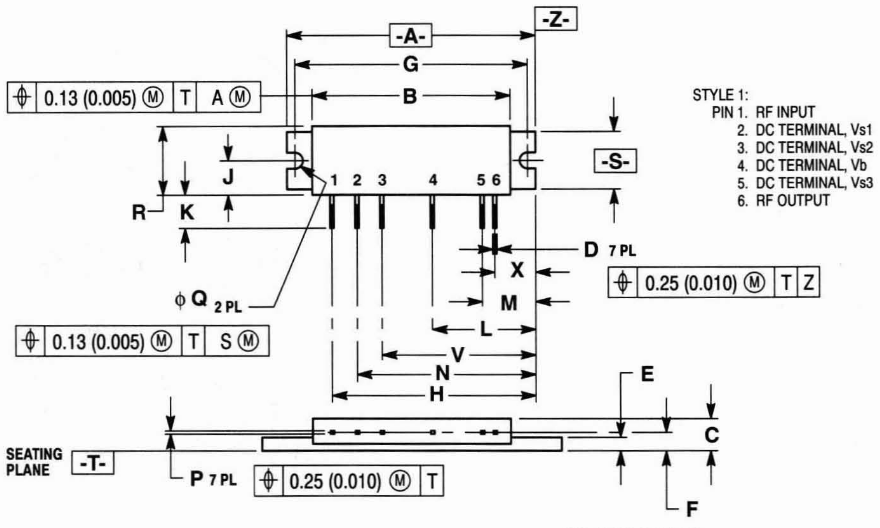

STYLE 1:
PIN 1. RF INPUT
2. DC TERMINAL, Vs1
3. DC TERMINAL, Vs2
4. DC TERMINAL, Vb
5. DC TERMINAL, Vs3
6. RF OUTPUT

NOTES:
1. DIMENSIONING AND TOLERANCING PER ANSI Y14.5M, 1982.
2. CONTROLLING DIMENSION: INCH.
3. DIMENSION F TO CENTER OF LEADS.
4. 301T-01 OBSOLETE, NEW STANDARD 301T-02.

	MILLIMETERS		INCHES	
DIM	MIN	MAX	MIN	MAX
A	50.04	50.55	1.970	1.990
B	39.88	40.39	1.570	1.590
C	6.23	6.73	0.245	0.265
D	0.46	0.56	0.018	0.022
E	2.54	2.92	0.100	0.115
F	3.73 BSC		0.147 BSC	
G	47.24 BSC		1.860 BSC	
H	41.28 BSC		1.625 BSC	
J	6.78	7.06	0.267	0.278
K	4.50	5.51	0.177	0.217
L	20.96 BSC		0.825 BSC	
M	10.80 BSC		0.425 BSC	
N	36.20 BSC		1.425 BSC	
P	0.20	0.30	0.008	0.012
Q	3.05	3.30	0.120	0.130
R	13.59	14.10	0.535	0.555
S	11.30	11.81	0.445	0.465
V	31.12 BSC		1.225 BSC	
X	8.26 BSC		0.325 BSC	

CASE 301T-02

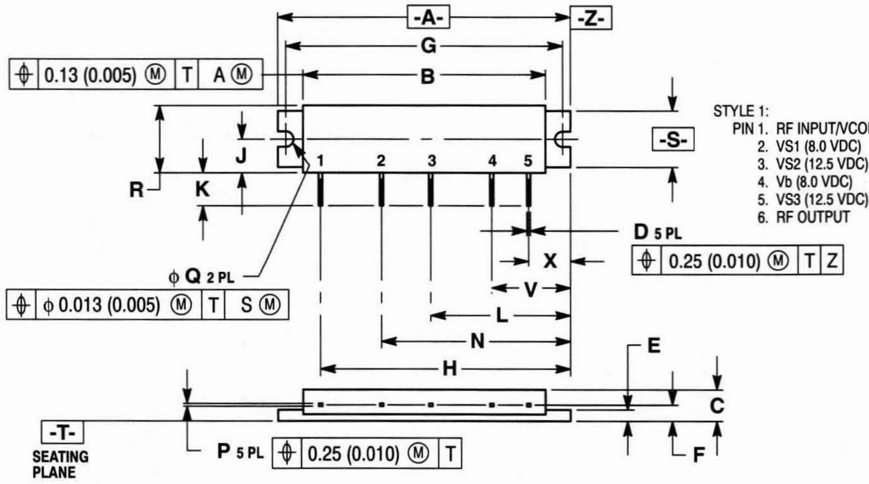

STYLE 1:
PIN 1. RF INPUT/VCONT (0–3 VDC)
2. VS1 (8.0 VDC)
3. VS2 (12.5 VDC)
4. Vb (8.0 VDC)
5. VS3 (12.5 VDC)
6. RF OUTPUT

NOTES:
1. DIMENSIONING AND TOLERANCING PER ANSI Y14.5M, 1982.
2. CONTROLLING DIMENSION: INCH.
3. DIMENSION F TO CENTER OF LEADS.

	MILLIMETERS		INCHES	
DIM	MIN	MAX	MIN	MAX
A	60.46	60.83	2.380	2.395
B	50.04	50.54	1.970	1.990
C	6.35	6.73	0.250	0.265
D	0.46	0.55	0.018	0.022
E	2.16	2.54	0.085	0.100
F	3.35 BSC		0.132 BSC	
G	57.40 BSC		2.260 BSC	
H	51.87 BSC		2.042 BSC	
J	6.78	7.06	0.267	0.278
K	4.49	5.51	0.177	0.217
L	29.01 BSC		1.142 BSC	
M	34.02 BSC		1.342 BSC	
N	39.17 BSC		1.542 BSC	
P	0.21	0.30	0.008	0.012
Q	3.05	3.30	0.120	0.130
R	13.59	14.09	0.535	0.555
S	11.31	11.81	0.445	0.465
V	16.31 BSC		0.642 BSC	
X	8.69 BSC		0.342 BSC	

CASE 301V-02

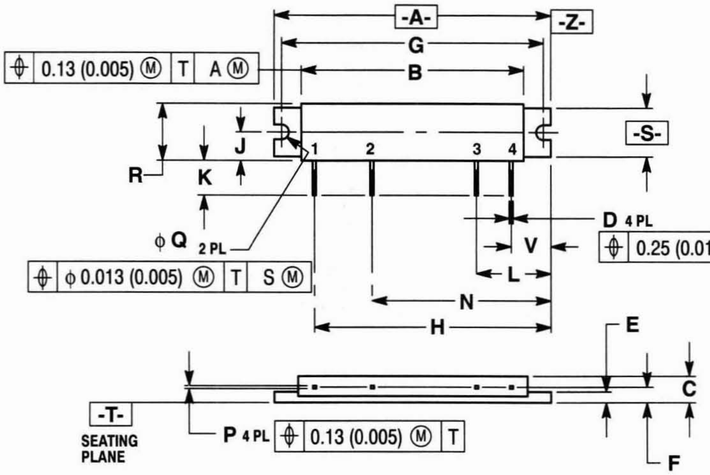

STYLE 1:
PIN 1. RF INPUT
2. VCONT
3. VSUPPLY
4. RF OUTPUT

NOTES:
1. DIMENSIONING AND TOLERANCING PER ANSI Y14.5M, 1982.
2. CONTROLLING DIMENSION: INCH.
3. DIMENSION F TO CENTER OF LEADS.

DIM	MILLIMETERS MIN	MILLIMETERS MAX	INCHES MIN	INCHES MAX
A	60.45	60.71	2.380	2.390
B	48.64	48.90	1.915	1.925
C	5.46	5.97	0.215	0.235
D	0.46	0.55	0.018	0.022
E	2.16	2.41	0.085	0.095
F	3.18 BSC		0.125 BSC	
G	57.40 BSC		2.260 BSC	
H	51.89 BSC		2.043 BSC	
J	6.10	6.22	0.240	0.245
K	4.49	5.51	0.177	0.217
L	16.33 BSC		0.643 BSC	
N	39.19 BSC		1.543 BSC	
P	0.21	0.30	0.008	0.012
Q	3.05	3.30	0.120	0.130
R	12.19	12.45	0.480	0.490
S	10.41	10.67	0.410	0.420
V	8.71 BSC		0.343 BSC	

CASE 301W-01

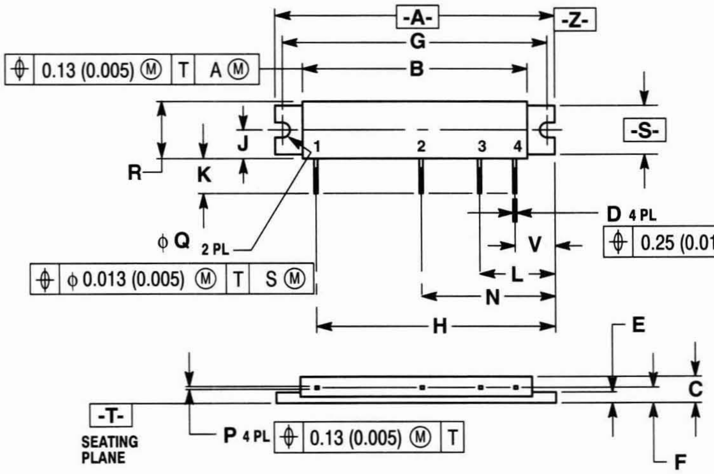

STYLE 1:
PIN 1. RF INPUT
2. VCONT
3. VSUPPLY
4. RF OUTPUT

NOTES:
1. DIMENSIONING AND TOLERANCING PER ANSI Y14.5M, 1982.
2. CONTROLLING DIMENSION: INCH.
3. DIMENSION F TO CENTER OF LEADS.

DIM	MILLIMETERS MIN	MILLIMETERS MAX	INCHES MIN	INCHES MAX
A	60.45	60.71	2.380	2.390
B	48.64	48.90	1.915	1.925
C	5.46	5.97	0.215	0.235
D	0.46	0.55	0.018	0.022
E	2.16	2.41	0.085	0.095
F	3.18 BSC		0.125 BSC	
G	57.40 BSC		2.260 BSC	
H	51.89 BSC		2.043 BSC	
J	6.10	6.22	0.240	0.245
K	4.49	5.51	0.177	0.217
L	16.33 BSC		0.643 BSC	
N	29.03 BSC		1.143 BSC	
P	0.21	0.30	0.008	0.012
Q	3.05	3.30	0.120	0.130
R	12.19	12.45	0.480	0.490
S	10.41	10.67	0.410	0.420
V	8.71 BSC		0.343 BSC	

CASE 301X-01

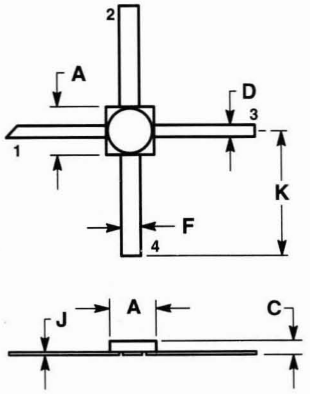

STYLE 1:
PIN 1. COLLECTOR
2. EMITTER
3. BASE
4. EMITTER

NOTES:
1. DIMENSION "K" APPLIES TO ALL LEADS.
2. DIRECTION OF 45° CUT ON PIN 1 IS VENDOR OPTION.

DIM	MILLIMETERS MIN	MILLIMETERS MAX	INCHES MIN	INCHES MAX
A	2.29	2.67	0.090	0.105
C	0.89	1.40	0.035	0.055
D	0.41	0.61	0.016	0.024
F	0.89	1.09	0.035	0.043
J	0.08	0.15	0.003	0.006
K	4.45	5.84	0.175	0.230

CASE 303-01

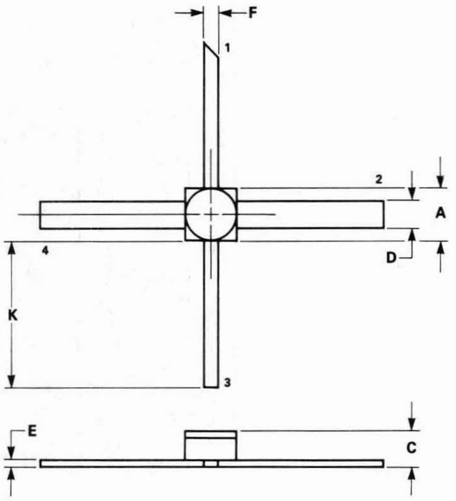

STYLE 3:
PIN 1. INPUT
2. GROUND
3. OUTPUT
4. GROUND

NOTE:
1. DIMENSION K APPLIES TO ALL LEADS.

DIM	MILLIMETERS MIN	MILLIMETERS MAX	INCHES MIN	INCHES MAX
A	1.58	1.98	0.062	0.078
C	0.77	1.19	0.030	0.047
D	0.84	1.19	0.033	0.047
E	0.08	0.15	0.003	0.006
F	0.41	0.60	0.016	0.024
K	5.01	5.89	0.197	0.232

CASE 303A-01

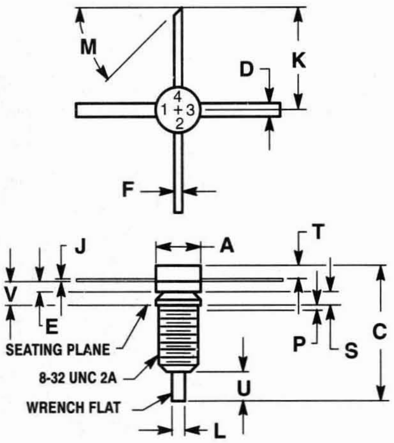

STYLE 1:
PIN 1. EMITTER
2. BASE
3. EMITTER
4. COLLECTOR

DIM	MILLIMETERS MIN	MILLIMETERS MAX	INCHES MIN	INCHES MAX
A	5.08	5.59	0.200	0.220
C	13.97	16.26	0.550	0.640
D	1.40	1.65	0.055	0.065
E	1.02	1.27	0.040	0.050
F	0.64	0.89	0.025	0.035
J	0.08	0.18	0.003	0.007
K	11.05	—	0.435	—
L	1.40	1.65	0.055	0.065
M	45° NOM		45° NOM	
P	—	1.27	—	0.050
S	1.40	1.65	0.055	0.065
T	1.40	1.78	0.055	0.070
U	2.79	3.81	0.110	0.150
V	2.41	2.92	0.095	0.115

CASE 305-01

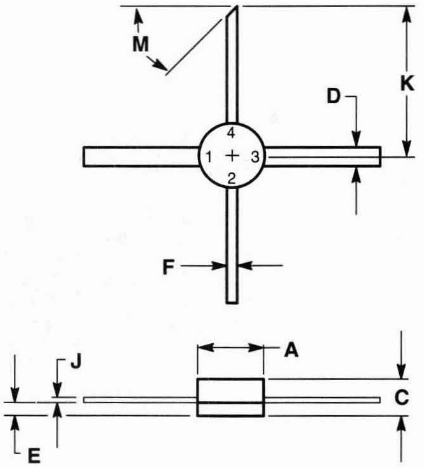

STYLE 1:
PIN 1. EMITTER
2. BASE
3. EMITTER
4. COLLECTOR

DIM	MILLIMETERS MIN	MILLIMETERS MAX	INCHES MIN	INCHES MAX
A	5.08	5.59	0.200	0.220
C	2.41	3.30	0.095	0.130
D	1.40	1.65	0.055	0.065
E	1.02	1.27	0.040	0.050
F	0.64	0.89	0.025	0.035
J	0.08	0.18	0.003	0.007
K	11.05	—	0.435	—
M	45° NOM		45° NOM	

CASE 305A-01

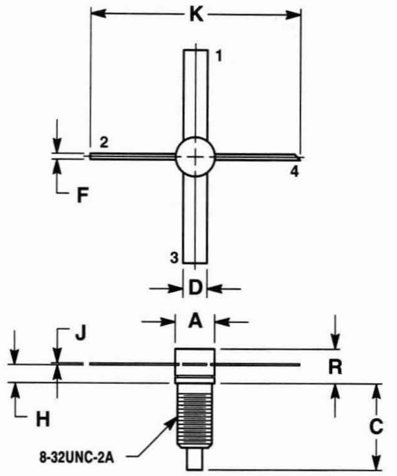

STYLE 1:
PIN 1. EMITTER
2. BASE
3. EMITTER
4. COLLECTOR

NOTES:
1. DIMENSIONING AND TOLERANCING PER ANSI Y14.5M, 1982.
2. CONTROLLING DIMENSION: INCH.

DIM	MILLIMETERS		INCHES	
	MIN	MAX	MIN	MAX
A	5.08	5.33	0.200	0.210
C	11.31	11.55	0.445	0.455
D	3.05	3.30	0.120	0.130
F	0.64	0.88	0.025	0.035
H	2.29	2.54	0.090	0.100
J	0.11	0.15	0.004	0.006
K	25.40	30.48	1.000	1.200
R	—	4.57	—	0.180

CASE 305B-01

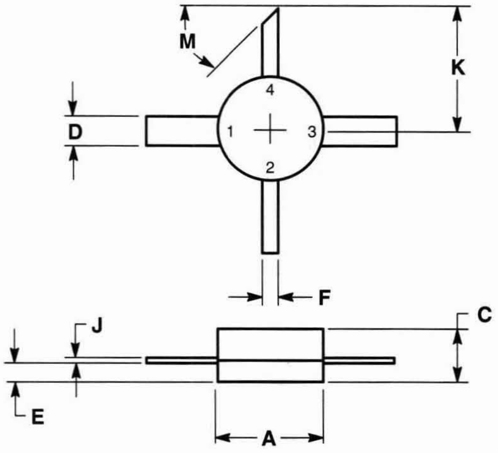

STYLE 1:
PIN 1. EMITTER
2. BASE
3. EMITTER
4. COLLECTOR

NOTES:
1. DIMENSIONS AND TOLERANCING PER ANSI Y14.5M, 1982.
2. CONTROLLING DIMENSION: INCH.

DIM	MILLIMETERS		INCHES	
	MIN	MAX	MIN	MAX
A	5.08	5.59	0.200	0.220
C	2.41	3.30	0.095	0.130
D	1.40	1.65	0.055	0.065
E	1.02	1.27	0.040	0.050
F	0.64	0.89	0.025	0.035
J	0.08	0.18	0.003	0.007
K	5.97	6.73	0.235	0.265
M	45° NOM		45° NOM	

CASE 305D-01

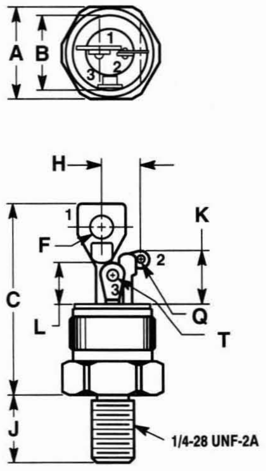

STYLE 1:
PIN 1. CATHODE
2. GATE
3. ANODE

STYLE 2:
PIN 1. MT 1
2. GATE
3. MT 2

DIM	MILLIMETERS		INCHES	
	MIN	MAX	MIN	MAX
A	14.00	14.20	0.551	0.559
B	12.73	12.83	0.501	0.505
C	—	32.51	—	1.280
F	—	4.06	—	0.160
H	—	6.73	—	0.265
J	10.67	11.56	0.420	0.455
K	7.62	8.89	0.300	0.350
L	6.48	6.99	0.255	0.275
Q	1.40	2.16	0.055	0.085
T	3.43	3.81	0.135	0.150

CASE 311-02

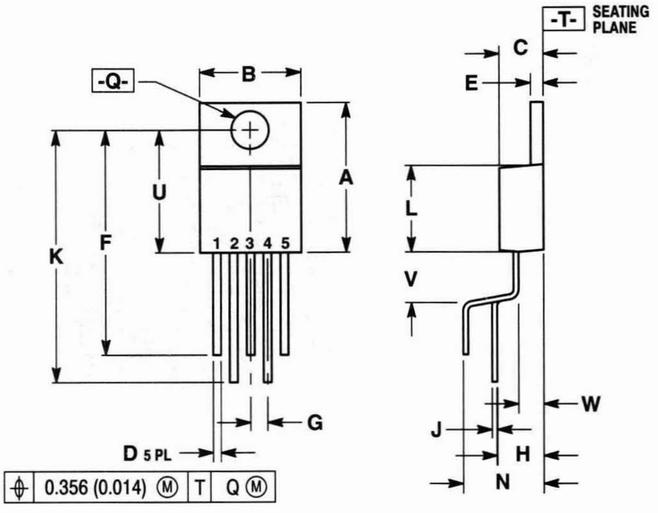

PIN 1. GATE
2. MIRROR
3. DRAIN
4. KELVIN
5. SOURCE

NOTES:
1. DIMENSIONING AND TOLERANCING PER ANSI Y14.5M, 1982.
2. CONTROLLING DIMENSION: INCH.
3. 314B-01 AND -02 OBSOLETE, NEW STANDARD 314B-03.

STYLE 1 THRU 4: OBSOLETE

DIM	MILLIMETERS		INCHES	
	MIN	MAX	MIN	MAX
A	14.529	15.570	0.572	0.613
B	9.906	10.541	0.390	0.415
C	4.318	4.572	0.170	0.180
D	0.635	0.965	0.025	0.038
E	1.169	1.397	0.046	0.055
F	21.590	23.749	0.850	0.935
G	1.702 BSC		0.067 BSC	
H	3.800	5.080	0.149	0.200
J	0.381	0.635	0.015	0.025
K	22.860	27.940	0.900	1.100
L	8.052	9.398	0.317	0.370
N	7.874	8.800	0.310	0.346
Q	3.556	3.937	0.140	0.155
U	11.888	12.827	0.468	0.505
V	4.699	5.842	0.185	0.230
W	2.286	2.794	0.090	0.110

CASE 314B-03

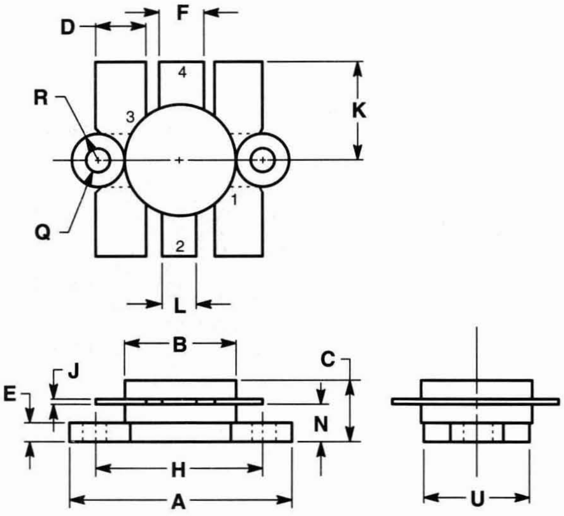

STYLE 1:
PIN 1. EMITTER
2. COLLECTOR
3. EMITTER
4. BASE

STYLE 2:
PIN 1. BASE
2. COLLECTOR
3. BASE
4. EMITTER

NOTE:
1. FLANGE IS ISOLATED IN ALL STYLES.

DIM	MILLIMETERS		INCHES	
	MIN	MAX	MIN	MAX
A	24.38	25.14	0.960	0.990
B	12.45	12.95	0.490	0.510
C	5.97	7.62	0.235	0.300
D	5.33	5.58	0.210	0.220
E	2.16	3.04	0.085	0.120
F	5.08	5.33	0.200	0.210
H	18.29	18.54	0.720	0.730
J	0.10	0.15	0.004	0.006
K	10.29	11.17	0.405	0.440
L	3.81	4.06	0.150	0.160
N	3.81	4.31	0.150	0.170
Q	2.92	3.30	0.115	0.130
R	3.05	3.30	0.120	0.130
U	11.94	12.57	0.470	0.495

CASE 316-01

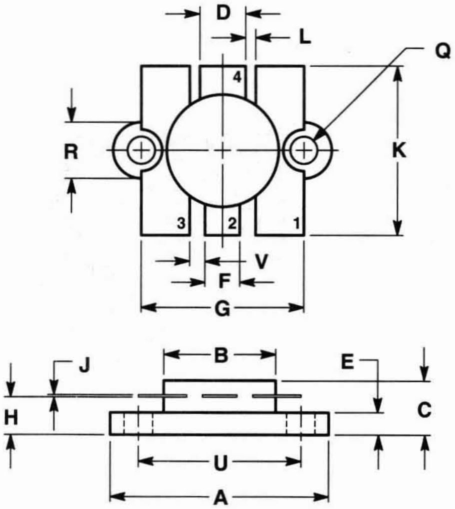

STYLE 1:
PIN 1. EMITTER
2. COLLECTOR
3. EMITTER
4. BASE

NOTES:
1. DIMENSIONING AND TOLERANCING PER ANSI Y14.5M, 1982.
2. CONTROLLING DIMENSION: INCH.

DIM	MILLIMETERS		INCHES	
	MIN	MAX	MIN	MAX
A	24.64	24.89	0.970	0.980
B	12.58	12.82	0.495	0.505
C	—	7.62	—	0.300
D	5.08	5.33	0.200	0.210
E	2.42	2.66	0.095	0.105
F	3.81	4.06	0.150	0.160
G	18.29	18.54	0.720	0.730
H	4.07	4.57	0.160	0.180
J	0.11	0.15	0.004	0.006
K	19.05	—	0.750	—
L	1.02	1.27	0.040	0.080
Q	2.93	3.30	0.115	0.130
R	6.23	6.47	0.245	0.255
U	18.29	18.54	0.720	0.730
V	1.66	1.90	0.065	0.075

CASE 316A-01

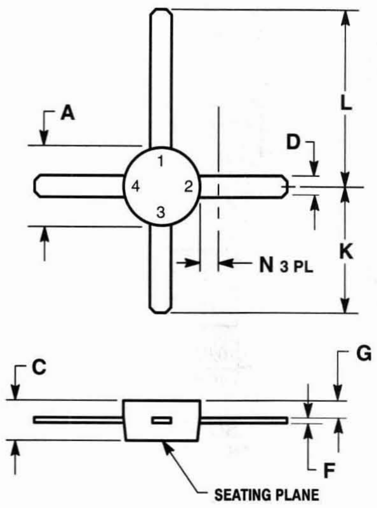

STYLE 2:
PIN 1. COLLECTOR
2. EMITTER
3. BASE
4. EMITTER

STYLE 3:
PIN 1. OUTPUT
2. GROUND
3. INPUT
4. GROUND

NOTE:
1. DIMENSION D NOT APPLICABLE IN ZONE N.

DIM	MILLIMETERS MIN	MILLIMETERS MAX	INCHES MIN	INCHES MAX
A	4.44	5.21	0.175	0.205
C	1.90	2.54	0.075	0.100
D	0.84	0.99	0.033	0.039
F	0.20	0.30	0.008	0.012
G	0.76	1.14	0.030	0.045
K	7.24	8.13	0.285	0.320
L	10.54	11.43	0.415	0.450
N	—	1.65	—	0.065

CASE 317-01

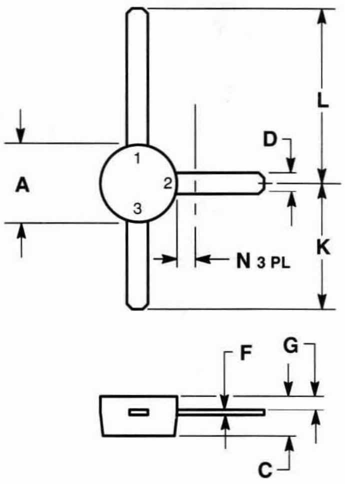

STYLE 2:
PIN 1. COLLECTOR
2. EMITTER
3. BASE

NOTE:
1. DIMENSION D NOT APPLICABLE IN ZONE N.

DIM	MILLIMETERS MIN	MILLIMETERS MAX	INCHES MIN	INCHES MAX
A	4.44	5.21	0.175	0.205
C	1.90	2.54	0.075	0.100
D	0.84	0.99	0.033	0.039
F	0.20	0.30	0.008	0.012
G	0.76	1.14	0.030	0.045
K	7.24	8.13	0.285	0.320
L	10.54	11.43	0.415	0.450
N	—	1.65	—	0.065

CASE 317A-01

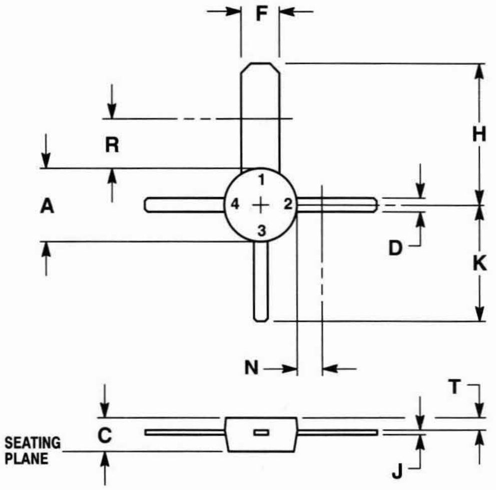

STYLE 2:
PIN 1. COLLECTOR
2. EMITTER
3. BASE
4. EMITTER

STYLE 3:
PIN 1. COLLECTOR
2. BASE
3. EMITTER
4. BASE

NOTES:
1. DIMENSIONING AND TOLERANCING PER ANSI Y14.5M, 1982.
2. CONTROLLING DIMENSION: INCH.
3. LEAD DIMENSIONS UNCONTROLLED WITHIN DIMENSION N AND R.
4. 317D-01 OBSOLETE, REPLACED BY NEW STANDARD 317D-02.

DIM	MILLIMETERS MIN	MILLIMETERS MAX	INCHES MIN	INCHES MAX
A	4.45	5.20	0.175	0.205
C	1.91	2.54	0.075	0.100
D	0.84	0.99	0.033	0.039
F	2.46	2.64	0.097	0.104
H	8.84	9.72	0.348	0.383
J	0.21	0.30	0.008	0.012
K	7.24	8.12	0.285	0.320
N	—	1.65	—	0.065
R	—	3.25	—	0.128
T	0.64	1.01	0.025	0.040

CASE 317D-02

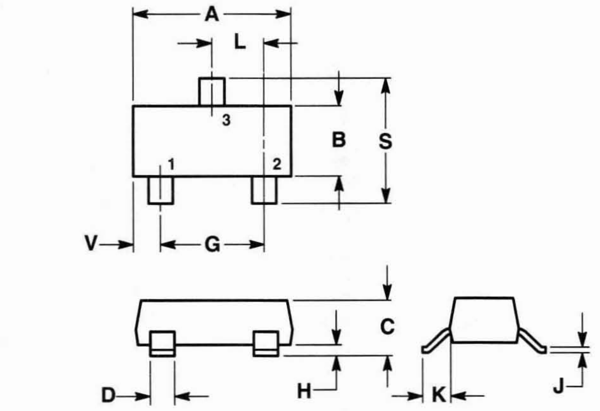

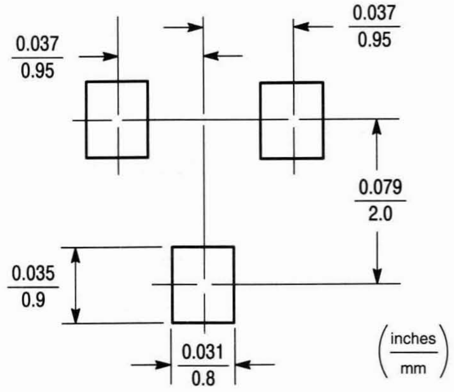

SOT-23 FOOTPRINT

STYLE 6:
PIN 1. BASE
2. EMITTER
3. COLLECTOR

STYLE 8:
PIN 1. ANODE
2. NO CONNECTION
3. CATHODE

STYLE 9:
PIN 1. ANODE
2. ANODE
3. CATHODE

STYLE 10:
PIN 1. DRAIN
2. SOURCE
3. GATE

STYLE 11:
PIN 1. ANODE
2. CATHODE
3. CATHODE-ANODE

STYLE 12:
PIN 1. CATHODE
2. CATHODE
3. ANODE

STYLE 18:
PIN 1. NO CONNECTION
2. CATHODE
3. ANODE

STYLE 19:
PIN 1. CATHODE
2. ANODE
3. CATHODE-ANODE

STYLE 21:
PIN 1. GATE
2. SOURCE
3. DRAIN

STYLE 22:
PIN 1. RETURN
2. OUTPUT
3. INPUT

NOTES:
1. DIMENSIONING AND TOLERANCING PER ANSI Y14.5M, 1982.
2. CONTROLLING DIMENSION: INCH.
3. MAXIMUM LEAD THICKNESS INCLUDES LEAD FINISH THICKNESS. MINIMUM LEAD THICKNESS IS THE MINIMUM THICKNESS OF BASE MATERIAL.
4. 318-03 OBSOLETE, NEW STANDARD 318-07.

	MILLIMETERS		INCHES	
DIM	MIN	MAX	MIN	MAX
A	2.80	3.04	0.1102	0.1197
B	1.20	1.40	0.0472	0.0551
C	0.89	1.11	0.0350	0.0440
D	0.37	0.50	0.0150	0.0200
G	1.78	2.04	0.0701	0.0807
H	0.013	0.100	0.0005	0.0040
J	0.085	0.177	0.0034	0.0070
K	0.45	0.60	0.0180	0.0236
L	0.89	1.02	0.0350	0.0401
S	2.10	2.50	0.0830	0.0984
V	0.45	0.60	0.0177	0.0236

CASE 318-07

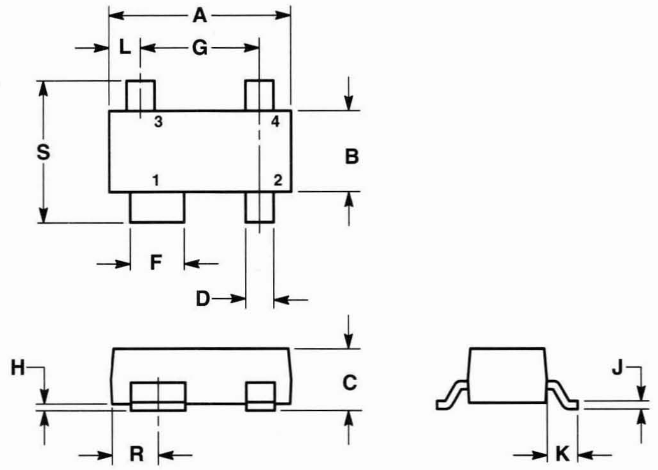

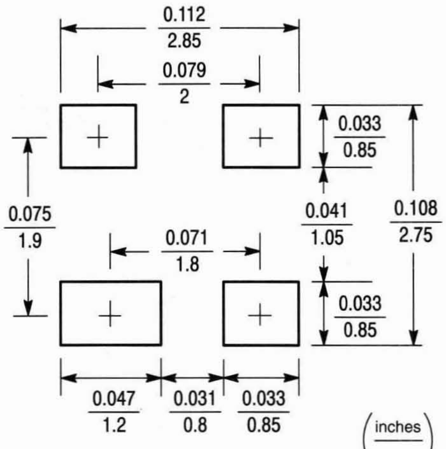

SOT-143 FOOTPRINT

STYLE 1:
PIN 1. COLLECTOR
2. EMITTER
3. EMITTER
4. BASE

STYLE 4:
PIN 1. OUTPUT
2. GROUND
3. GROUND
4. INPUT

NOTES:
1. DIMENSIONING AND TOLERANCING PER ANSI Y14.5M, 1982.
2. CONTROLLING DIMENSION: MILLIMETERS.
3. 318A-01 THRU -04 OBSOLETE, NEW STANDARD 318A-05.

	MILLIMETERS		INCHES	
DIM	MIN	MAX	MIN	MAX
A	2.80	3.04	0.110	0.120
B	1.20	1.39	0.047	0.055
C	0.84	1.14	0.033	0.045
D	0.39	0.50	0.015	0.020
F	0.79	0.93	0.031	0.037
G	1.78	2.03	0.070	0.080
H	0.013	0.10	0.0005	0.004
J	0.08	0.15	0.003	0.006
K	0.46	0.60	0.018	0.024
L	0.445	0.60	0.0175	0.024
R	0.72	0.83	0.028	0.033
S	2.11	2.48	0.083	0.098

CASE 318A-05

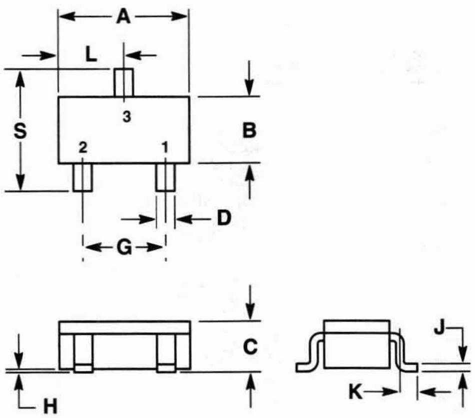

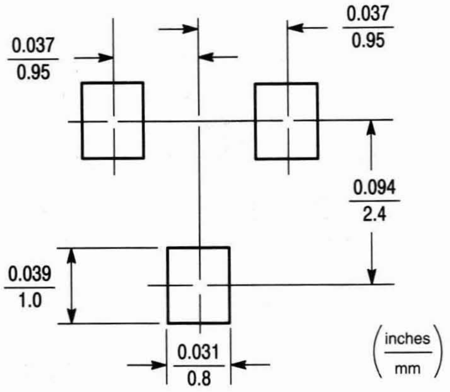

SC-59 FOOTPPRINT

STYLE 2:
PIN 1. N.C.
2. ANODE
3. CATHODE

STYLE 4:
PIN 1. N.C.
2. CATHODE
3. ANODE

STYLE 3:
PIN 1. ANODE
2. ANODE
3. CATHODE

STYLE 5:
PIN 1. CATHODE
2. CATHODE
3. ANODE

NOTES:
1. DIMENSIONING AND TOLERANCING PER ANSI Y15.5M, 1982.
2. CONTROLLING DIMENSION: MILLIMETERS.
3. 318D-01 AND -02 OBSOLETE, NEW STANDARD 318D-03.

DIM	MILLIMETERS MIN	MILLIMETERS MAX	INCHES MIN	INCHES MAX
A	2.70	3.10	0.1063	0.1220
B	1.30	1.70	0.0512	0.0669
C	1.00	1.30	0.0394	0.0511
D	0.35	0.50	0.0138	0.0196
G	1.70	2.10	0.0670	0.0826
H	0.013	0.100	0.0005	0.0040
J	0.10	0.26	0.0040	0.0102
K	0.20	0.60	0.0079	0.0236
L	1.25	1.65	0.0493	0.0649
S	2.50	3.00	0.0985	0.1181

CASE 318D-03

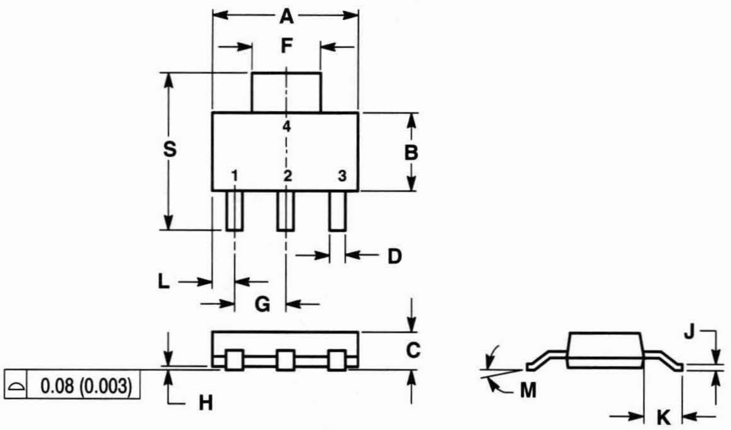

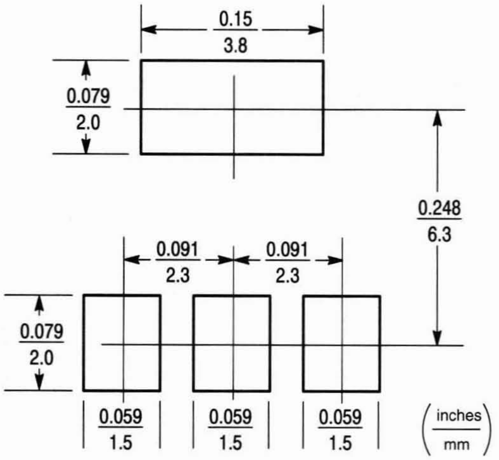

SOT-223 FOOTPRINT

STYLE 2:
PIN 1. ANODE
2. CATHODE
3. NC
4. CATHODE

STYLE 3:
PIN 1. GATE
2. DRAIN
3. SOURCE
4. DRAIN

STYLE 6:
PIN 1. RETURN
2. INPUT
3. OUTPUT
4. INPUT

NOTES:
1. DIMENSIONING AND TOLERANCING PER ANSI Y14.5M, 1982.
2. CONTROLLING DIMENSION: INCH.
3. 318E-01 THRU -03 OBSOLETE, NEW STANDARD 318E-04.

DIM	MILLIMETERS MIN	MILLIMETERS MAX	INCHES MIN	INCHES MAX
A	6.30	6.70	0.249	0.263
B	3.30	3.70	0.130	0.145
C	1.50	1.75	0.060	0.068
D	0.60	0.89	0.024	0.035
F	2.90	3.20	0.115	0.126
G	2.20	2.40	0.087	0.094
H	0.020	0.100	0.0008	0.0040
J	0.24	0.35	0.009	0.014
K	1.50	2.00	0.060	0.078
L	0.85	1.05	0.033	0.041
M	0°	10°	0°	10°
S	6.70	7.30	0.264	0.287

CASE 318E-04

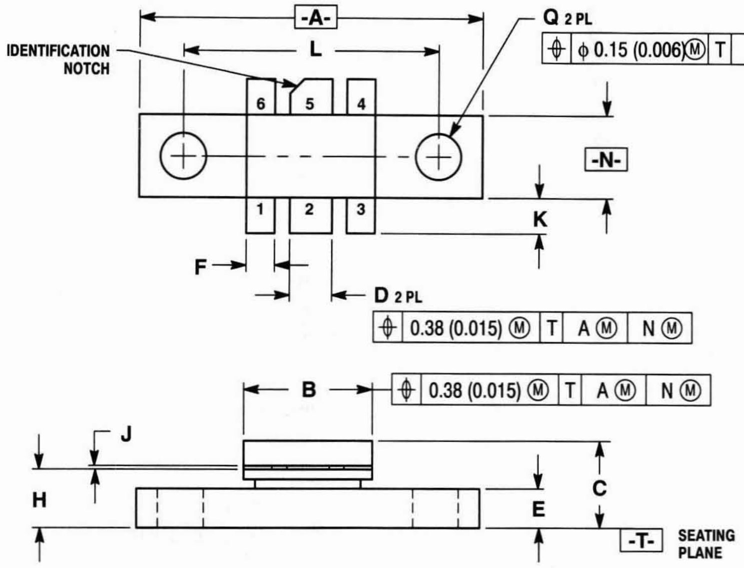

NOTES:
1. DIMENSIONING AND TOLERANCING PER ANSI Y14.5M, 1982.
2. CONTROLLING DIMENSION: INCH.
3. 319-01 THRU -05 OBSOLETE, REPLACED BY NEW STANDARD 319-06.

DIM	MILLIMETERS MIN	MILLIMETERS MAX	INCHES MIN	INCHES MAX
A	24.52	25.01	0.965	0.985
B	9.02	9.52	0.355	0.375
C	5.85	6.60	0.230	0.260
D	2.93	3.17	0.115	0.125
E	2.70	2.94	0.106	0.116
F	1.91	2.15	0.075	0.085
H	4.07	4.31	0.160	0.170
J	0.11	0.15	0.004	0.006
K	2.29	2.79	0.090	0.110
L	18.42 BSC		0.725 BSC	
N	5.72	6.12	0.225	0.241
Q	3.18	3.42	0.125	0.135

STYLE 1:
PIN 1. BASE (COMMON)
2. EMITTER (INPUT)
3. BASE (COMMON)
4. BASE (COMMON)
5. COLLECTOR (OUTPUT)
6. BASE (COMMON)

STYLE 2:
PIN 1. EMITTER (COMMON)
2. BASE (INPUT)
3. EMITTER (COMMON)
4. EMITTER (COMMON)
5. COLLECTOR (OUTPUT)
6. EMITTER (COMMON)

STYLE 3:
PIN 1. SOURCE (COMMON)
2. GATE (INPUT)
3. SOURCE (COMMON)
4. SOURCE (COMMON)
5. DRAIN (OUTPUT)
6. SOURCE (COMMON)

CASE 319-06

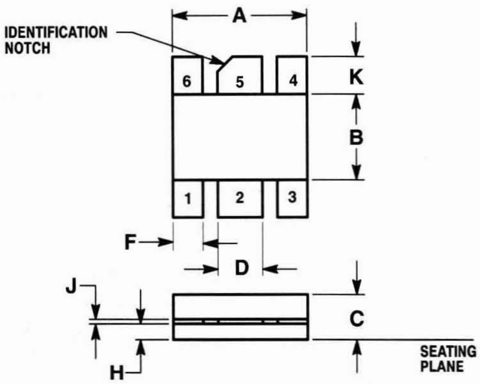

NOTES:
1. DIMENSIONING AND TOLERANCING PER ANSI Y14.5M, 1982.
2. CONTROLLING DIMENSION: INCH.
3. 319A-01 OBSOLETE, NEW STANDARD 319A-02.

DIM	MILLIMETERS MIN	MILLIMETERS MAX	INCHES MIN	INCHES MAX
A	9.02	9.27	0.355	0.365
B	5.72	5.96	0.225	0.235
C	2.80	3.17	0.110	0.125
D	2.93	3.17	0.115	0.125
F	1.91	2.15	0.075	0.085
H	0.89	1.14	0.035	0.045
J	0.11	0.15	0.004	0.006
K	2.29	2.79	0.090	0.110

STYLE 2:
PIN 1. EMITTER
2. BASE
3. EMITTER
4. EMITTER
5. COLLECTOR
6. EMITTER

CASE 319A-02

PACKAGE OUTLINE DIMENSIONS AND FOOTPRINTS (continued)

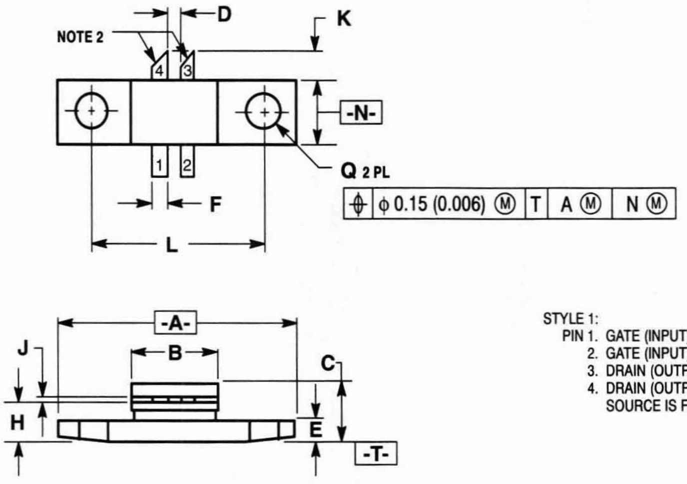

STYLE 1:
PIN 1. GATE (INPUT)
2. GATE (INPUT)
3. DRAIN (OUTPUT)
4. DRAIN (OUTPUT)
SOURCE IS FLANGE

NOTES:
1. IDENTIFICATION NOTCH: 1.0 mm (0.04) MINIMUM X 45°.
2. DIMENSION D APPLIES 2 PLACES. DIMENSION K APPLIES 2 PLACES. DIMENSION Q APPLIES 2 PLACES. DIMENSION F APPLIES 4 PLACES.
3. DIMENSION B APPLIES TO LEAD FRAME AND BeO.
4. POSITIONAL TOLERANCE FOR F TERMINAL AND DIMENSION B:
   ⌖ 0.38 (0.105) Ⓜ T A Ⓜ N Ⓜ
5. DIMENSIONING AND TOLERANCING PER Y14.5M, 1982.

	MILLIMETERS		INCHES	
DIM	MIN	MAX	MIN	MAX
A	24.51	25.02	0.965	0.985
B	9.02	9.52	0.355	0.375
C	5.84	6.60	0.230	0.260
D	1.40	1.65	0.055	0.065
E	2.69	2.94	0.106	0.116
F	1.40	1.65	0.055	0.065
H	4.06	4.31	0.160	0.170
J	0.10	0.15	0.004	0.006
K	3.05	3.55	0.120	0.140
L	18.42 BSC		0.725 BSC	
N	5.72	6.12	0.225	0.241
Q	3.18	3.42	0.125	0.135

CASE 319B-01

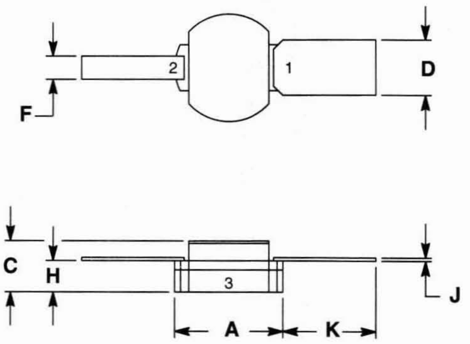

STYLE 2:
PIN 1. BASE
2. COLLECTOR
3. EMITTER

NOTES:
1. DIMENSIONING AND TOLERANCING PER ANSI Y14.5M, 1982.
2. CONTROLLING DIMENSION: INCH

	MILLIMETERS		INCHES	
DIM	MIN	MAX	MIN	MAX
A	5.72	5.96	0.225	0.235
C	2.29	2.79	0.090	0.110
D	2.93	3.17	0.115	0.125
F	1.15	1.39	0.045	0.055
H	1.66	1.90	0.065	0.075
J	0.08	0.15	0.003	0.006
K	5.72	6.98	0.225	0.275

CASE 328E-01

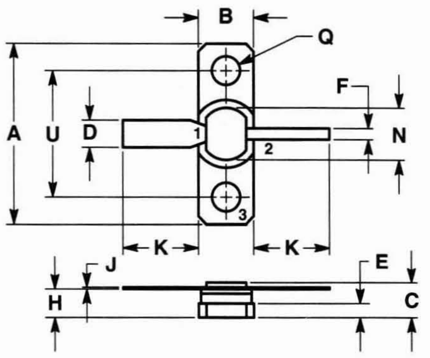

STYLE 1:
PIN 1. BASE
2. COLLECTOR
3. EMITTER

STYLE 2:
PIN 1. EMITTER
2. COLLECTOR
3. BASE

STYLE 3:
PIN 1. BASE
2. EMITTER
3. COLLECTOR

NOTES:
1. DIMENSIONING AND TOLERANCING PER ANSI Y14.5M, 1982.
2. CONTROLLING DIMENSION: INCH.

	MILLIMETERS		INCHES	
DIM	MIN	MAX	MIN	MAX
A	20.07	20.57	0.790	0.810
B	6.10	6.60	0.240	0.260
C	3.66	4.31	0.144	0.170
D	2.93	3.17	0.115	0.125
E	1.40	1.65	0.055	0.065
F	1.15	1.39	0.045	0.055
H	2.93	3.42	0.115	0.135
J	0.08	0.15	0.003	0.006
K	5.72	6.98	0.225	0.275
N	5.59	6.09	0.220	0.240
Q	3.18	3.42	0.125	0.135
U	14.03	14.52	0.552	0.572

CASE 328F-01

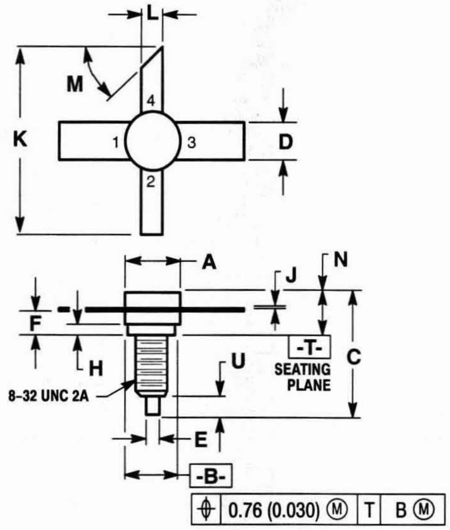

STYLE 1:
PIN 1. BASE
2. EMITTER
3. BASE
4. COLLECTOR

STYLE 2:
PIN 1. EMITTER
2. BASE
3. EMITTER
4. COLLECTOR

NOTES:
1. DIMENSION K APPLIES TWO PLACES.
2. DIMENSIONING AND TOLERANCING PER ANSI Y14.5, 1973.
3. CASE 332-01, 332-03 OBSOLETE, REPLACED BY NEW STANDARD 332-04.

DIM	MILLIMETERS MIN	MILLIMETERS MAX	INCHES MIN	INCHES MAX
A	6.86	7.62	0.270	0.300
B	6.10	6.60	0.240	0.260
C	16.26	16.76	0.640	0.660
D	4.95	5.21	0.195	0.205
E	1.40	1.65	0.055	0.065
F	2.67	4.32	0.105	0.170
H	1.40	1.65	0.055	0.065
J	0.08	0.18	0.003	0.007
K	15.24	—	0.600	—
L	2.41	2.67	0.095	0.105
M	45° NOM		45° NOM	
N	4.57	6.22	0.180	0.245
U	2.92	3.68	0.115	0.145

CASE 332-04

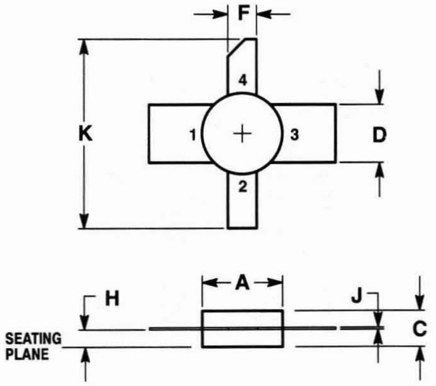

STYLE 1:
PIN 1. BASE
2. EMITTER
3. BASE
4. COLLECTOR

STYLE 2:
PIN 1. EMITTER
2. BASE
3. EMITTER
4. COLLECTOR

NOTES:
1. DIMENSIONING AND TOLERANCING PER ANSI Y14.5M, 1982.
2. CONTROLLING DIMENSION: INCH.
3. 332A-02 OBSOLETE, REPLACED BY NEW STANDARD 332B-01.
4 332A-01 OBSOLETE, REPLACED BY NEW STANDARD 332A-03.

DIM	MILLIMETERS MIN	MILLIMETERS MAX	INCHES MIN	INCHES MAX
A	6.86	7.36	0.270	0.290
C	2.93	3.42	0.115	0.135
D	4.96	5.20	0.195	0.205
F	2.42	2.66	0.095	0.105
H	1.27	1.77	0.050	0.070
J	0.08	0.17	0.003	0.007
K	15.24	—	0.600	—

CASE 332A-03

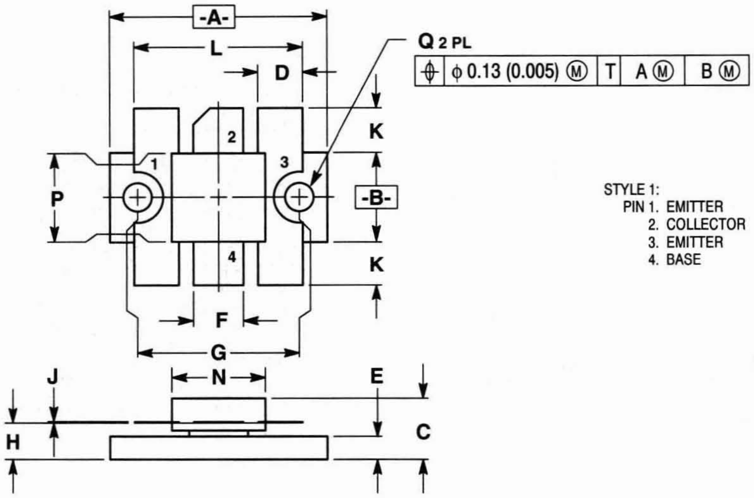

STYLE 1:
PIN 1. EMITTER
2. COLLECTOR
3. EMITTER
4. BASE

NOTES:
1. DIMENSIONING AND TOLERANCING PER ANSI Y14.5M, 1982.
2. CONTROLLING DIMENSION: INCH.
3. 333-01 THRU -03 OBSOLETE, REPLACED BY NEW STANDARD 333-04.

DIM	MILLIMETERS MIN	MILLIMETERS MAX	INCHES MIN	INCHES MAX
A	24.51	25.02	0.965	0.985
B	9.91	10.41	0.390	0.410
C	6.73	7.36	0.250	0.290
D	4.83	5.33	0.190	0.210
E	2.42	2.92	0.095	0.115
F	5.47	5.96	0.215	0.235
G	18.42 BSC		0.725 BSC	
H	3.94	4.44	0.155	0.175
J	0.10	0.15	0.004	0.006
K	4.95	5.21	0.195	0.205
L	18.80	19.55	0.740	0.770
N	10.54	10.80	0.415	0.425
P	9.91	10.16	0.390	0.400
Q	3.05	3.42	0.120	0.135

CASE 333-04

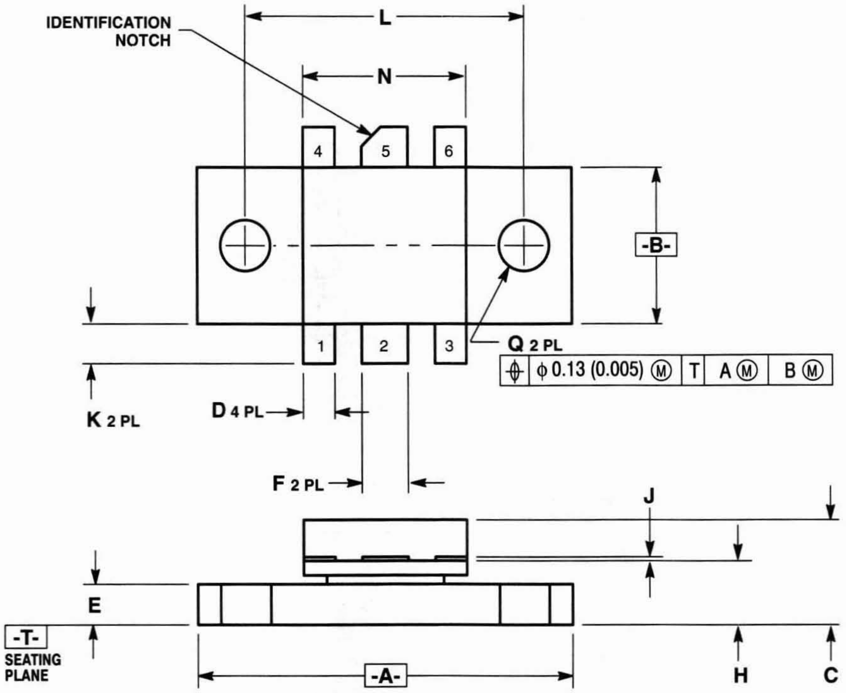

NOTES:
1. DIMENSIONING AND TOLERANCING PER ANSI Y14.5M, 1982.
2. CONTROLLING DIMENSION: INCH.
3. 333A-01 OBSOLETE, REPLACED BY NEW STANDARD 333A-02.

	MILLIMETERS		INCHES	
DIM	MIN	MAX	MIN	MAX
A	24.52	25.01	0.965	0.985
B	9.91	10.41	0.390	0.410
C	6.35	7.36	0.250	0.290
D	1.91	2.28	0.075	0.090
E	2.42	2.92	0.095	0.115
F	2.80	3.30	0.110	0.130
H	3.94	4.44	0.155	0.175
J	0.11	0.15	0.004	0.006
K	2.29	2.94	0.090	0.116
L	18.41 BSC		0.725 BSC	
N	10.55	11.04	0.415	0.435
Q	3.05	3.42	0.120	0.135

STYLE 1:
PIN 1. BASE
2. EMITTER
3. BASE
4. BASE
5. COLLECTOR
6. BASE

CASE 333A-02

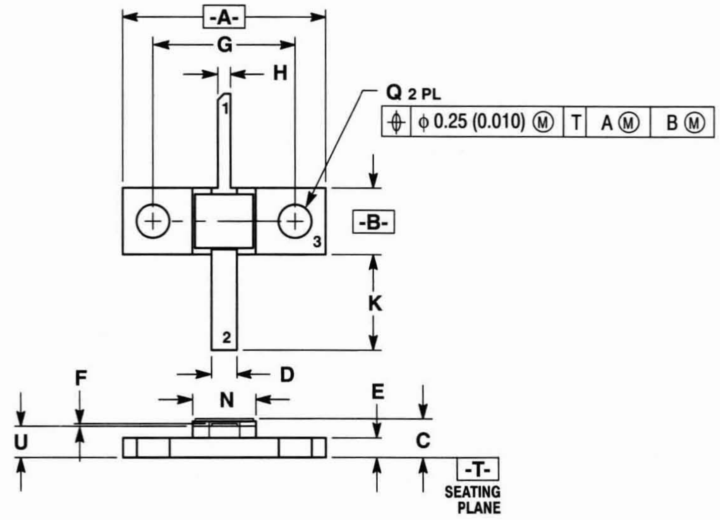

NOTES:
1. DIMENSIONING AND TOLERANCING PER ANSI Y14.5M, 1982.
2. CONTROLLING DIMENSION: INCH.
3. 336E-01 OBSOLETE, REPLACED BY NEW STANDARD 336E-02.

	MILLIMETERS		INCHES	
DIM	MIN	MAX	MIN	MAX
A	20.07	20.57	0.790	0.810
B	6.43	6.78	0.253	0.267
C	3.66	4.06	0.144	0.160
D	2.37	2.71	0.093	0.107
E	1.88	2.03	0.074	0.080
F	0.06	0.15	0.002	0.006
G	14.22 BSC		0.560 BSC	
H	1.10	1.44	0.043	0.057
K	8.79	10.10	0.346	0.394
N	6.18	6.52	0.243	0.257
Q	3.18	3.42	0.125	0.135
U	2.98	3.25	0.117	0.128

STYLE 1:
PIN 1. COLLECTOR
2. EMITER
3. BASE

CASE 336E-02

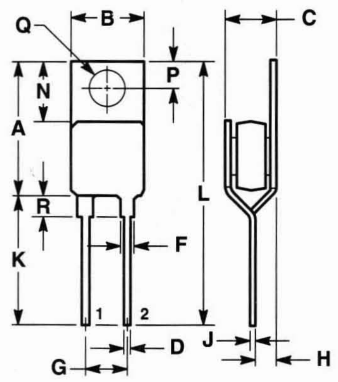

STYLE 1:
PIN 1. CATHODE
2. ANODE

DIM	MILLIMETERS		INCHES	
	MIN	MAX	MIN	MAX
A	14.22	15.88	0. 560	0.625
B	9.65	10.67	0.380	0.420
C	7.21	7.87	0.284	0.310
D	0.64	1.14	0.025	0.045
F	1.52	2.29	0.060	0.090
G	4.32	5.33	0.170	0.210
H	2.03	2.92	0.080	0.115
J	0.58	0.74	0.023	0.029
K	—	14.27	—	0.562
L	—	30.15	—	1.187
N	5.84	6.86	0.230	0.270
P	2.54	3.05	0.100	0.120
Q	3.53	3.73	0.139	0.147
R	—	5.08	—	0.200

CASE 339-02

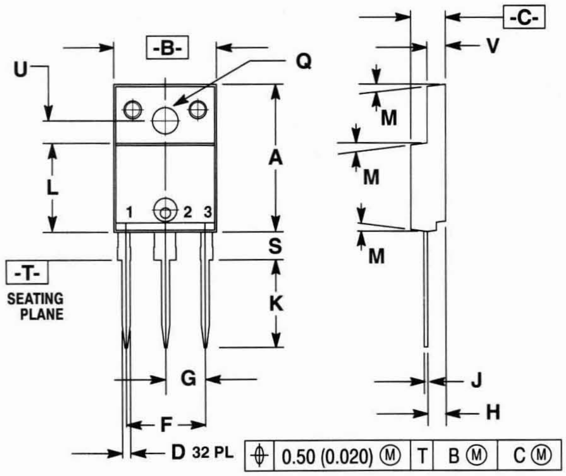

STYLE 1:
PIN 1. BASE
2. COLLECTOR
3. EMITTER

NOTES:
1. DIMENSIONING AND TOLERANCING PER ANSI Y14.5M, 1982.
2. CONTROLLING DIMENSION: INCH.
3. 340B-01 AND -02 OBSOLETE, NEW STANDARD 340B-03.

DIM	MILLIMETERS		INCHES	
	MIN	MAX	MIN	MAX
A	19.97	20.21	0.786	0.796
B	13.97	14.47	0.550	0.570
C	4.81	5.05	0.189	0.199
D	1.10	1.24	0.043	0.049
F	10.98 BSC		0.432 BSC	
G	5.44 BSC		0.214 BSC	
H	2.52	2.71	0.099	0.107
J	0.51	0.71	0.020	0.028
K	11.94	12.31	0.470	0.485
L	11.82	12.06	0.465	0.475
M	7 NOM		7 NOM	
Q	3.41	3.60	0.134	0.142
S	3.56	4.06	0.140	0.160
U	2.95	3.05	0.116	0.120
V	2.52	2.76	0.099	0.109

CASE 340B-03

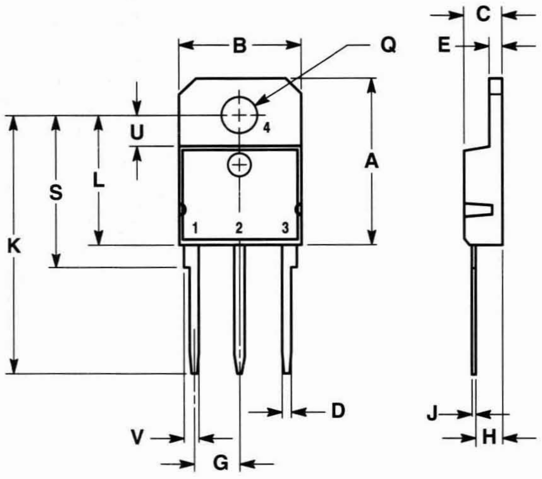

STYLE 1:
PIN 1. BASE
2. COLLECTOR
3. EMITTER
4. COLLECTOR

STYLE 2:
PIN 1. ANODE
2. CATHODE
3. ANODE
4. CATHODE

NOTES:
1. DIMENSIONING AND TOLERANCING PER ANSI Y14.5M, 1982.
2. CONTROLLING DIMENSION: MILLIMETER.

DIM	MILLIMETERS		INCHES	
	MIN	MAX	MIN	MAX
A	19.00	19.60	0.749	0.771
B	14.00	14.50	0.551	0.570
C	4.20	4.70	0.165	0.185
D	1.00	1.30	0.040	0.051
E	1.45	1.65	0.058	0.064
G	5.21	5.72	0.206	0.225
H	2.60	3.00	0.103	0.118
J	0.40	0.60	0.016	0.023
K	28.50	32.00	1.123	1.259
L	14.70	15.30	0.579	0.602
Q	4.00	4.25	0.158	0.167
S	17.50	18.10	0.689	0.712
U	3.40	3.80	0.134	0.149
V	1.50	2.00	0.060	0.078

CASE 340D-01

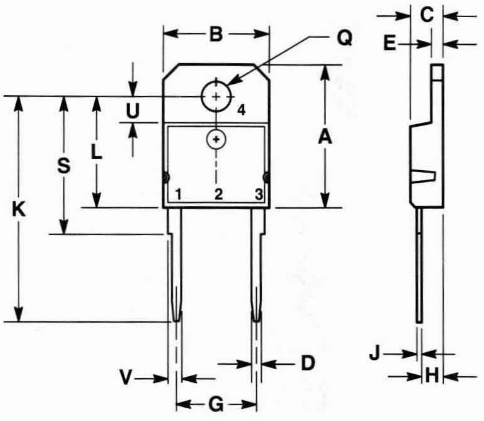

STYLE 1:
PIN 1. CATHODE
3. ANODE
4. CATHODE

NOTES:
1. DIMENSIONING AND TOLERANCING PER ANSI Y14.5M, 1982
2. CONTROLLING DIMENSION; MILLIMETER.

DIM	MILLIMETERS MIN	MILLIMETERS MAX	INCHES MIN	INCHES MAX
A	19.00	19.60	0.749	0.771
B	14.00	14.50	0.551	0.570
C	4.20	5.00	0.165	0.196
D	1.00	1.30	0.040	0.051
E	1.45	1.65	0.058	0.064
G	10.42	11.44	0.411	0.450
H	2.60	3.00	0.103	0.118
J	0.40	0.60	0.016	0.023
K	28.50	32.00	1.123	1.259
L	14.70	15.30	0.579	0.602
Q	4.00	4.25	0.158	0.167
S	17.50	19.50	0.689	0.767
U	3.40	3.80	0.134	0.149
V	1.50	2.00	0.060	0.078

CASE 340E-01

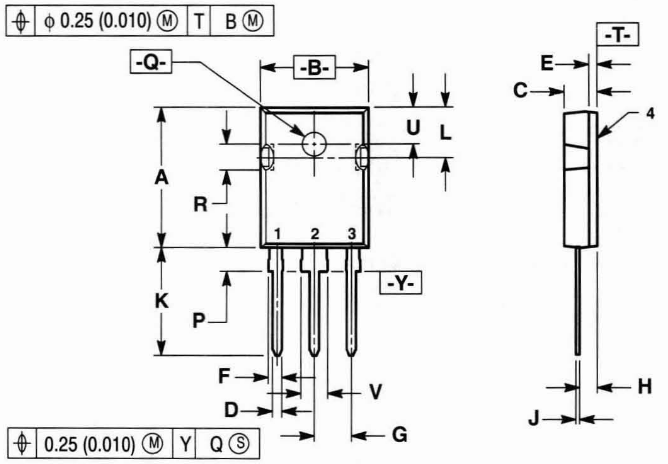

STYLE 2:
PIN 1. ANODE 1
2. CATHODE(S)
3. ANODE 2
4. CATHODE(S)

NOTES:
1. DIMENSIONING AND TOLERANCING PER ANSI Y14.5M, 1982.
2. CONTROLLING DIMENSION: MILLIMETER.
3. 340F-01 AND -02 OBSOLETE, NEW STANDARD 340F-03.

DIM	MILLIMETERS MIN	MILLIMETERS MAX	INCHES MIN	INCHES MAX
A	20.40	20.90	0.803	0.823
B	15.44	15.95	0.608	0.628
C	4.70	5.21	0.185	0.205
D	1.09	1.30	0.043	0.051
E	1.50	1.63	0.059	0.064
F	1.80	2.18	0.071	0.086
G	5.45 BSC		0.215 BSC	
H	2.56	2.87	0.101	0.113
J	0.48	0.68	0.019	0.027
K	15.57	16.08	0.613	0.633
L	7.26	7.50	0.286	0.295
P	3.10	3.38	0.122	0.133
Q	3.50	3.70	0.138	0.145
R	3.30	3.80	0.130	0.150
U	5.30 BSC		0.209 BSC	
V	3.05	3.40	0.120	0.134

CASE 340F-03

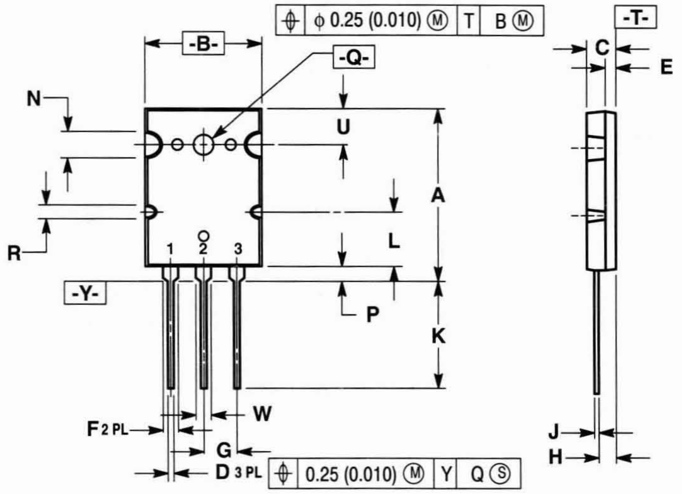

STYLE 2:
PIN 1. BASE
2. COLLECTOR
3. EMITTER

NOTES:
1. DIMENSIONING AND TOLERANCING PER ANSI Y14.5M, 1982
2. CONTROLLING DIMENSION: MILLIMETER.

DIM	MILLIMETERS MIN	MILLIMETERS MAX	INCHES MIN	INCHES MAX
A	25.5	26.5	1.003	1.043
B	19.5	20.5	0.768	0.807
C	4.6	5.2	0.181	0.205
D	0.75	1.30	0.030	0.051
E	1.8	2.0	0.071	0.079
F	2.3	2.7	0.090	0.106
G	5.45 BSC		0.215 BSC	
H	2.6	3.0	0.102	0.118
J	0.50	0.85	0.019	0.033
K	19.4	20.6	0.763	0.811
L	10.8	11.2	0.425	0.440
N	3.7	4.5	0.145	0.177
P	2.3	2.7	0.090	0.106
Q	3.1	3.5	0.122	0.137
R	1.9	2.1	0.074	0.082
U	5.8	6.2	0.228	0.244
W	2.8	3.2	0.110	0.125

CASE 340G-01

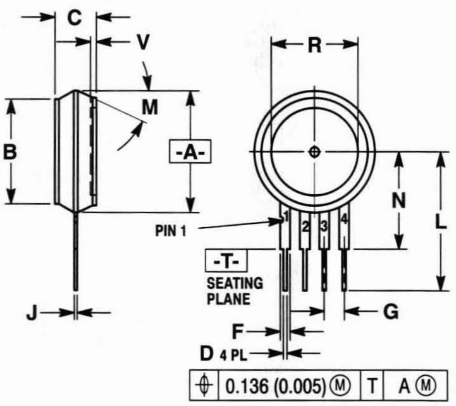

NOTES:
1. DIMENSIONING AND TOLERANCING PER ANSI Y14.5M, 1982.
2. CONTROLLING DIMENSION: INCH.
3. 344-01 THRU -04 OBSOLETE.
4. 344-05 THRU -07 OBSOLETE, NEW STANDARD 344-08.

	MILLIMETERS		INCHES	
DIM	MIN	MAX	MIN	MAX
A	14.99	15.62	0.590	0.615
B	12.83	13.34	0.505	0.525
C	4.95	5.72	0.195	0.225
D	0.41	0.51	0.016	0.020
F	1.22	1.32	0.048	0.052
G	2.54 BSC		0.100 BSC	
J	0.36	0.40	0.014	0.016
L	17.40	18.16	0.685	0.715
M	30° NOM		30° NOM	
N	12.19	12.70	0.480	0.500
R	10.67	11.43	0.420	0.450

CASE 344-08

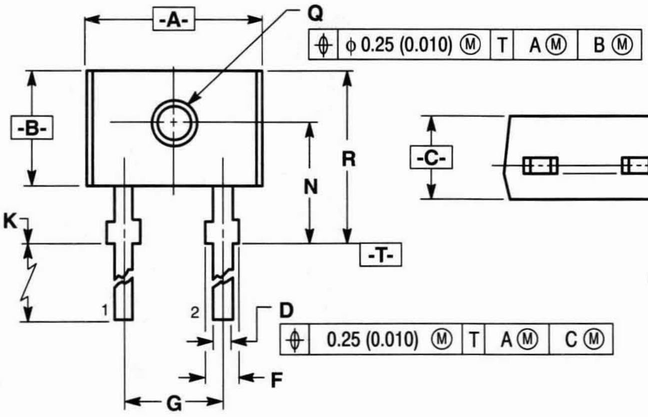

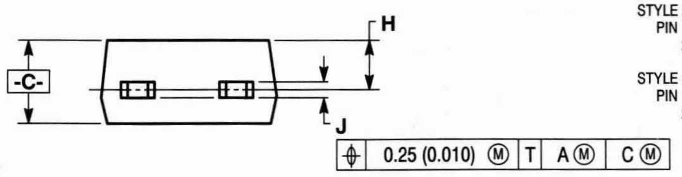

STYLE 1:
PIN 1. CATHODE
2. ANODE

STYLE 2:
PIN 1. EMITTER
2. COLLECTOR

STYLE 4:
PIN 1. ANODE
2. CATHODE

NOTES:
1. DIMENSIONING AND TOLERANCING PER ANSI Y14.5M, 1982.
2. CONTROLLING DIMENSION: INCH.
3. 349-01 AND 349-02 OBSOLETE, REPLACED BY NEW STANDARDS 349-03 AND 349-04.

	MILLIMETERS		INCHES	
DIM	MIN	MAX	MIN	MAX
A	3.43	4.69	0.135	0.185
B	2.80	3.30	0.110	0.130
C	2.04	3.17	0.080	0.125
D	0.44	0.60	0.017	0.024
F	1.14	1.39	0.045	0.055
G	2.54 BSC		0.100 BSC	
H	1.27 BSC		0.050 BSC	
J	0.23	0.55	0.009	0.022
K	12.83	13.58	0.505	0.535
N	3.05	3.30	0.120	0.130
Q	0.77	1.52	0.030	0.060
R	3.81	4.69	0.150	0.185

CASE 349-03

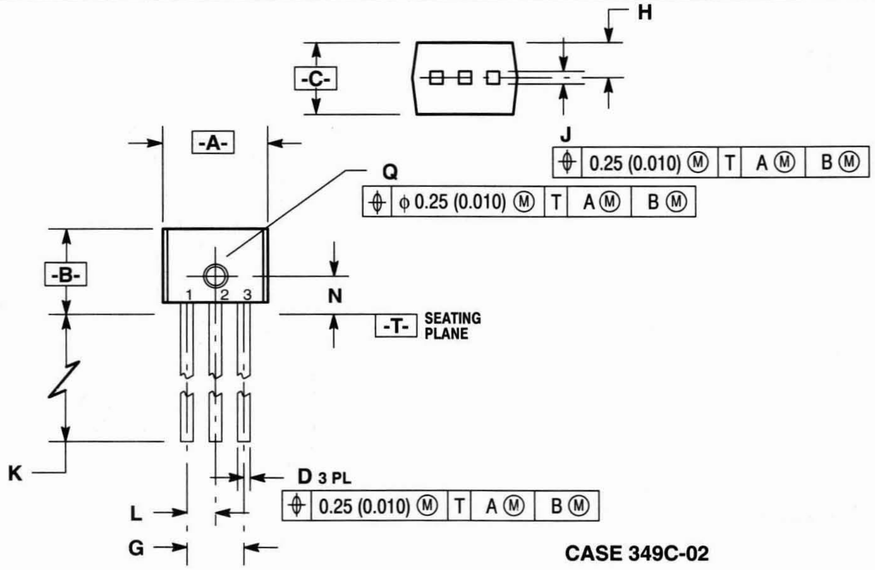

NOTES:
1. DIMENSIONING AND TOLERANCING PER ANSI Y14.5M, 1982.
2. CONTROLLING DIMENSION: INCH.
3. 349-01 IS OBSOLETE. REPLACED BY NEW STANDARD 349C-02.

	MILLIMETERS		INCHES	
DIM	MIN	MAX	MIN	MAX
A	3.43	4.69	0.135	0.185
B	2.80	3.30	0.110	0.130
C	2.04	3.17	0.080	0.125
D	0.44	0.55	0.017	0.022
G	2.54 BSC		0.100 BSC	
H	1.27 BSC		0.050 BSC	
J	0.23	0.55	0.009	0.022
K	12.70	----	0.500	----
L	1.27 BSC		0.050 BSC	
N	1.78 BSC		0.070 BSC	
Q	0.76	1.52	0.030	0.060

STYLE 3:
PIN 1. OUTPUT
2. GROUND
3. V_{CC}

CASE 349C-02

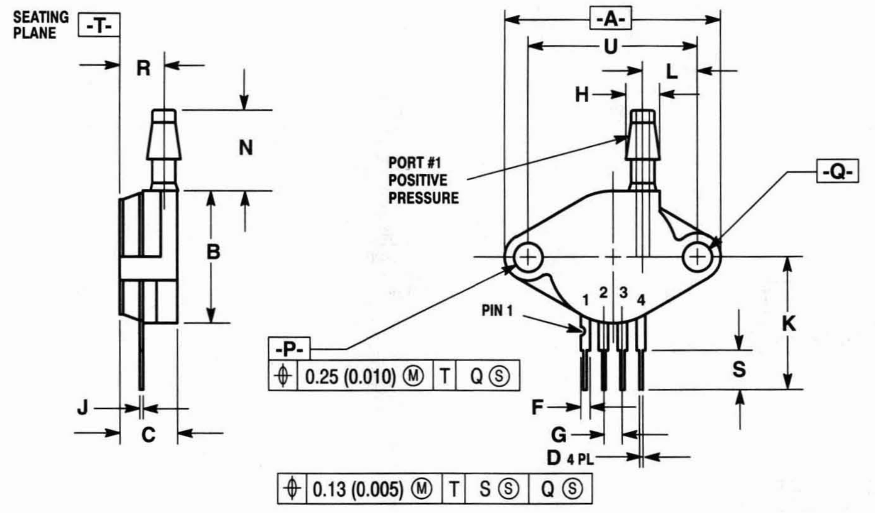

NOTES:
1. DIMENSIONING AND TOLERANCING PER ANSI Y14.5M, 1982
2. CONTROLLING DIMENSION: INCH.
3. 350-01 OBSOLETE, NEW STANDARD 350-03.

DIM	MILLIMETERS MIN	MILLIMETERS MAX	INCHES MIN	INCHES MAX
A	28.95	29.97	1.140	1.180
B	17.39	18.16	0.685	0.715
C	7.74	8.15	0.305	0.321
D	0.40	0.50	0.016	0.020
F	1.21	1.32	0.048	0.052
G	2.54 BSC		0.100 BSC	
H	4.62	4.92	0.182	0.194
J	0.35	0.40	0.014	0.016
K	17.39	18.16	0.685	0.715
L	7.34	7.62	0.290	0.300
N	10.67	11.12	0.420	0.440
P	3.88	4.01	0.153	0.158
Q	3.88	4.01	0.153	0.158
R	5.86	6.35	0.231	0.250
S	5.84 REF		0.230 REF	
U	23.11 BSC		0.910 BSC	

CASE 350-03

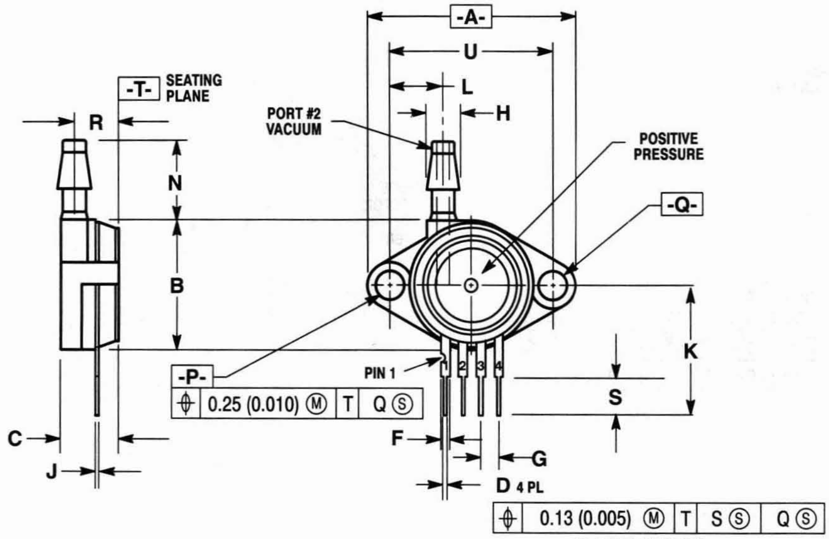

NOTES:
1. DIMENSIONING AND TOLERANCING PER ANSI Y14.5, 1982.
2. CONTROLLING DIMENSION: INCH.
2. 350-02 OBSOLETE, NEW STANDARD 350-04.

DIM	MILLIMETERS MIN	MILLIMETERS MAX	INCHES MIN	INCHES MAX
A	28.95	29.97	1.140	1.180
B	17.39	18.16	0.685	0.715
C	7.74	8.15	0.305	0.321
D	0.40	0.50	0.016	0.020
F	1.21	1.32	0.048	0.052
G	2.54 BSC		0.100 BSC	
H	4.62	4.92	0.182	0.194
J	0.35	0.40	0.014	0.016
K	17.39	18.16	0.685	0.715
L	7.34	7.62	0.290	0.300
N	10.67	10.92	0.420	0.430
P	3.88	4.01	0.153	0.158
Q	3.88	4.01	0.153	0.158
R	5.86	6.35	0.231	0.250
S	5.84 REF		0.230 REF	
U	23.11 BSC		0.910 BSC	

CASE 350-04

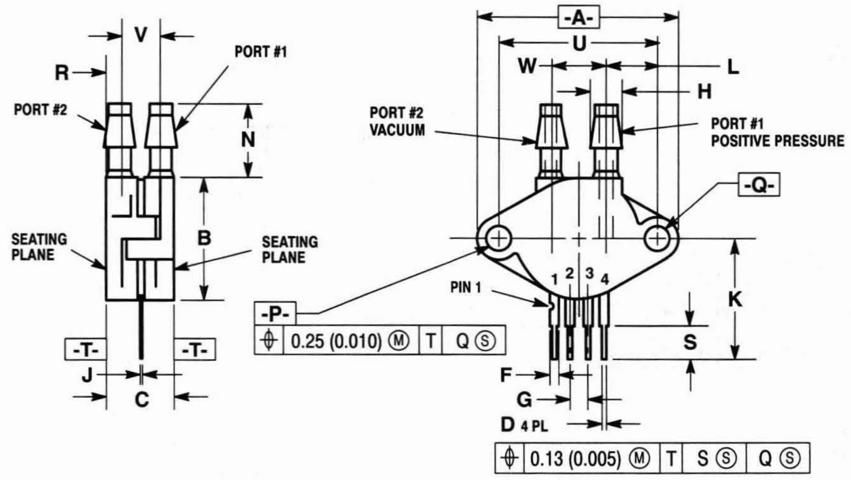

NOTES:
1. DIMENSIONING AND TOLERANCING PER ANSI Y14.5M, 1982.
2. CONTROLLING DIMENSION: INCH.
3. 352-01 OBSOLETE, NEW STANDARD 352-02.

DIM	MILLIMETERS MIN	MILLIMETERS MAX	INCHES MIN	INCHES MAX
A	28.95	29.97	1.140	1.180
B	17.39	18.16	0.685	0.715
C	9.65	10.66	0.380	0.420
D	0.40	0.50	0.016	0.020
F	1.21	1.32	0.048	0.052
G	2.54 BSC		0.100 BSC	
H	4.62	4.92	0.182	0.194
J	0.35	0.40	0.014	0.016
K	17.39	18.16	0.685	0.715
L	7.34	7.62	0.290	0.300
N	10.67	10.92	0.420	0.430
P	3.88	4.01	0.153	0.158
Q	3.88	4.01	0.153	0.158
R	1.60	2.10	0.063	0.083
S	5.84 REF		0.230 REF	
U	23.11 BSC		0.910 BSC	
V	6.17	6.93	0.243	0.273
W	7.87	8.38	0.310	0.330

CASE 352-02

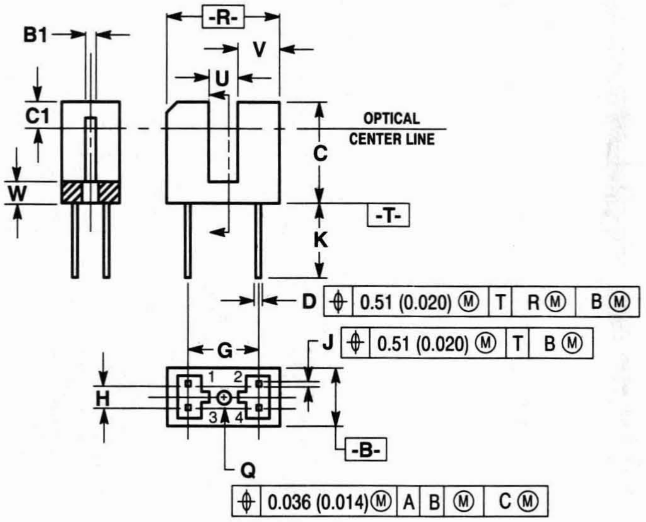

STYLE 1:
PIN 1. CATHODE
2. COLLECTOR
3. ANODE
4. EMITTER

NOTES:
1. DIMENSIONING AND TOLERANCING PER Y14.5, 1982.
2. 354-01 OBSOLETE, REPLACED BY NEW STANDARD 354-02.

	MILLIMETERS		INCHES	
DIM	MIN	MAX	MIN	MAX
B	6.19	6.50	0.244	0.256
C	10.64	10.94	0.419	0.431
D	0.35	0.55	0.014	0.022
G	7.36 BSC		0.290 BSC	
H	2.54 BSC		0.100 BSC	
J	0.43	0.55	0.017	0.022
K	7.36	—	0.290	—
Q	1.45	1.70	0.057	0.067
R	11.98	12.19	0.472	0.480
U	3.07	3.32	0.115	0.129
V	4.36	4.52	0.172	0.178
W	2.38	2.69	0.094	0.106
B1	0.88	1.14	0.035	0.045
C1	2.54 NOM		0.100 NOM	

CASE 354-02

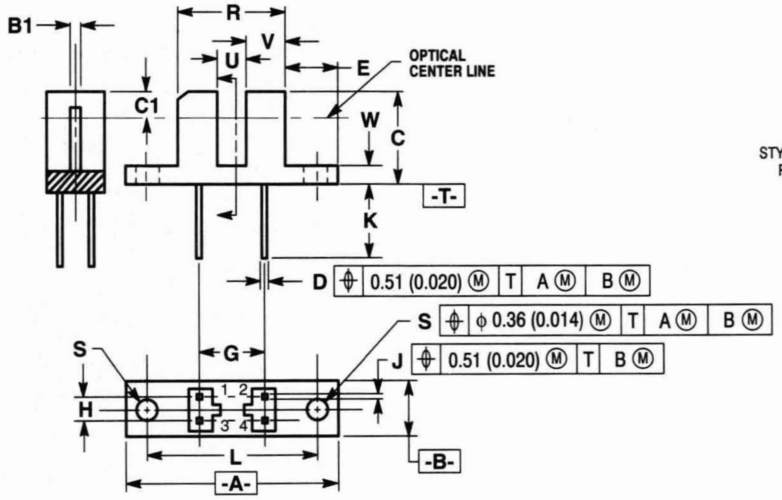

STYLE 1:
PIN 1. CATHODE
2. COLLECTOR
3. ANODE
4. EMITTER

NOTE:
1. DIMENSIONING AND TOLERANCING PER Y14.5, 1982.

	MILLIMETERS		INCHES	
DIM	MIN	MAX	MIN	MAX
A	24.13	25.01	0.950	0.985
B	6.19	6.50	0.244	0.256
C	10.64	10.94	0.419	0.431
D	0.35	0.55	0.014	0.022
E	6.24	6.55	0.246	0.258
G	7.36 BSC		0.290 BSC	
H	2.54 BSC		0.100 BSC	
J	0.43	0.55	0.017	0.022
K	7.36	—	0.290	—
L	19.05 BSC		0.750 BSC	
R	11.98	12.19	0.472	0.480
S	3.24	3.37	0.124	0.133
U	3.07	3.32	0.115	0.129
V	4.36	4.52	0.172	0.178
W	2.38	2.69	0.094	0.106
B1	0.88	1.14	0.035	0.045
C1	2.54 NOM		0.100 NOM	

CASE 354A-01

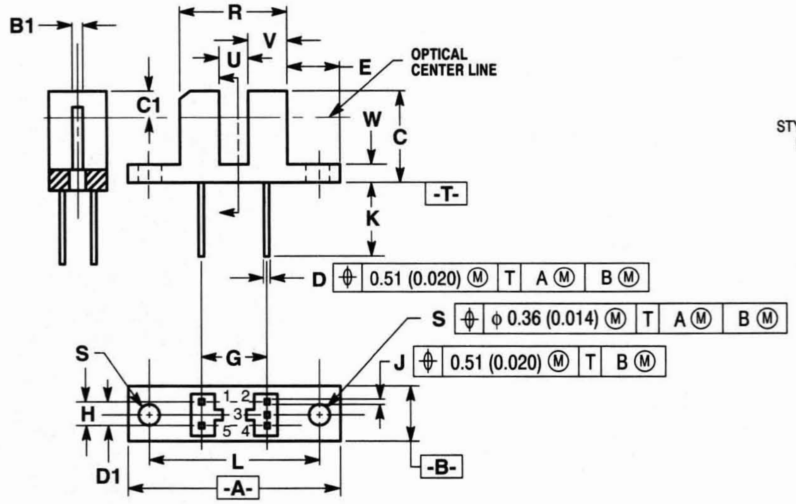

STYLE 1:
PIN 1. CATHODE
2. V_{CC}
3. GROUND
4. OUTPUT
5. ANODE

NOTE:
1. DIMENSIONING AND TOLERANCING PER Y14.5, 1982.

	MILLIMETERS		INCHES	
DIM	MIN	MAX	MIN	MAX
A	24.13	25.01	0.950	0.985
B	6.19	6.50	0.244	0.256
C	10.64	10.94	0.419	0.431
D	0.35	0.55	0.014	0.022
E	6.24	6.55	0.246	0.258
G	7.36 BSC		0.290 BSC	
H	2.54 BSC		0.100 BSC	
J	0.43	0.55	0.017	0.022
K	7.36	—	0.290	—
L	19.05 BSC		0.750 BSC	
R	11.98	12.19	0.472	0.480
S	3.24	3.37	0.124	0.133
U	3.07	3.32	0.115	0.129
V	4.36	4.52	0.172	0.178
W	2.38	2.69	0.094	0.106
B1	0.88	1.14	0.035	0.045
C1	2.54 NOM		0.100 NOM	
D1	1.27 BSC		0.050 BSC	

CASE 354C-01

PACKAGE OUTLINE DIMENSIONS AND FOOTPRINTS (continued)

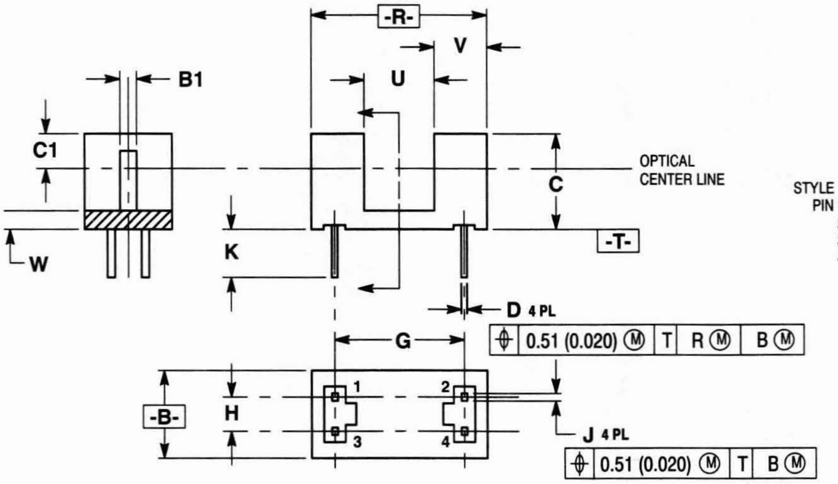

STYLE 1:
PIN 1. CATHODE
2. COLLECTOR
3. ANODE
4. EMITTER

NOTES:
1. DIMENSIONING AND TOLERANCING PER ANSI Y14.5M, 1982.
2. CONTROLLING DIMENSION: INCH.
3. 354E-01 OBSOLETE, NEW STANDARD 354E-02.

DIM	MILLIMETERS MIN	MILLIMETERS MAX	INCHES MIN	INCHES MAX
B	6.20	6.50	0.244	0.256
C	6.71	7.01	0.264	0.276
D	0.26	0.43	0.010	0.017
G	9.66 BSC		0.380 BSC	
H	2.54 BSC		0.100 BSC	
J	0.43	0.55	0.017	0.022
K	2.54	3.55	0.100	0.140
R	12.83	13.08	0.505	0.515
U	5.06	5.35	0.199	0.211
V	3.89	4.03	0.153	0.159
W	1.25	1.37	0.049	0.054
B1	1.14	1.40	0.045	0.055
C1	2.54 NOM		0.100 NOM	

CASE 354E-02

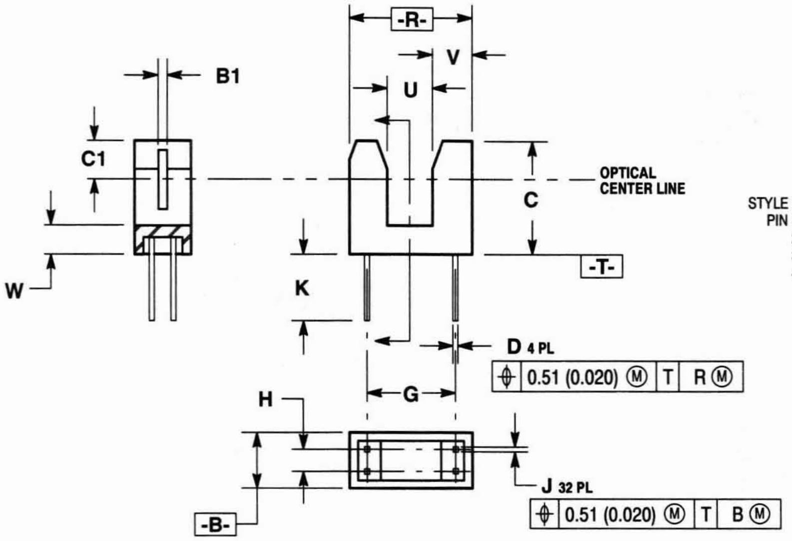

STYLE 1:
PIN 1. CATHODE
2. COLLECTOR
3. ANODE
4. EMITTER

NOTES:
1. DIMENSIONING AND TOLERANCING PER ANSI Y14.5M, 1982.
2. CONTROLLING DIMENSION: INCH.

DIM	MILLIMETERS MIN	MILLIMETERS MAX	INCHES MIN	INCHES MAX
B	6.18	6.32	0.243	0.249
C	12.58	12.82	0.495	0.505
D	0.36	0.55	0.014	0.022
G	10.16 BSC		0.400 BSC	
H	2.54 BSC		0.100 BSC	
J	0.43	0.55	0.017	0.022
K	7.37	----	0.290	----
R	13.69	13.94	0.539	0.549
U	4.83	5.08	0.190	0.200
V	4.38	4.51	0.172	0.177
W	3.05	3.30	0.120	0.130
B1	0.87	0.99	0.034	0.039
C1	4.32 NOM		0.170 NOM	

CASE 354G-01

PACKAGE OUTLINE DIMENSIONS AND FOOTPRINTS (continued)

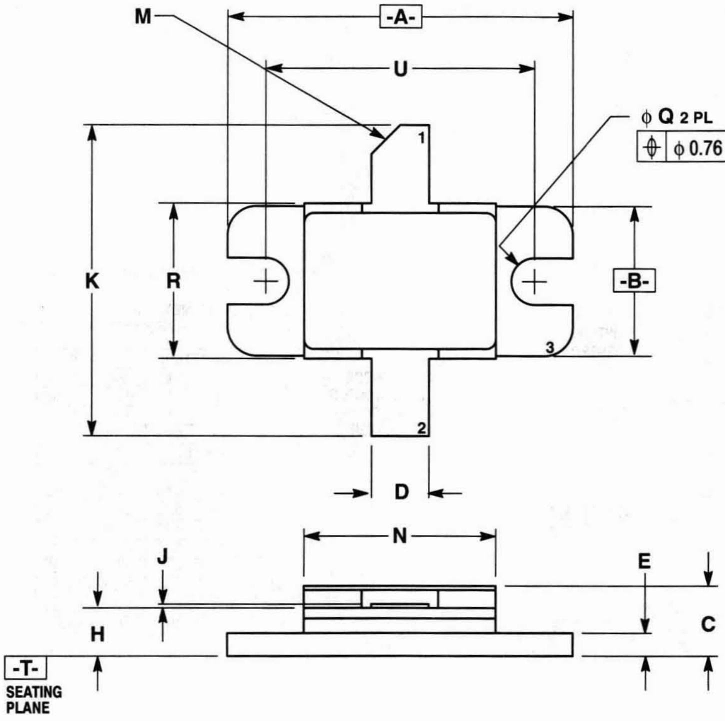

STYLE 1:
PIN 1. COLLECTOR
2. EMITTER
3. BASE

NOTES:
1. DIMENSIONING AND TOLERANCING PER ANSI Y14.5M, 1982.
2. CONTROLLING DIMENSION: INCH.
3. 355C-01 OBSOLETE, REPLACED BY NEW STANDARD 355C-02.

DIM	MILLIMETERS MIN	MILLIMETERS MAX	INCHES MIN	INCHES MAX
A	22.61	23.11	0.890	0.910
B	9.53	10.03	0.375	0.395
C	3.94	5.33	0.155	0.210
D	3.69	3.93	0.145	0.155
E	1.40	1.65	0.055	0.065
H	3.05	3.30	0.120	0.130
J	0.08	0.15	0.003	0.006
K	19.56	21.08	0.770	0.830
M	45° REF		45° REF	
N	12.45	12.95	0.490	0.510
Q	2.93	3.17	0.115	0.125
R	10.04	10.28	0.395	0.405
U	17.78 BSC		0.700 BSC	

CASE 355C-02

STYLE 1:
PIN 1. COLLECTOR
2. EMITTER
3. BASE

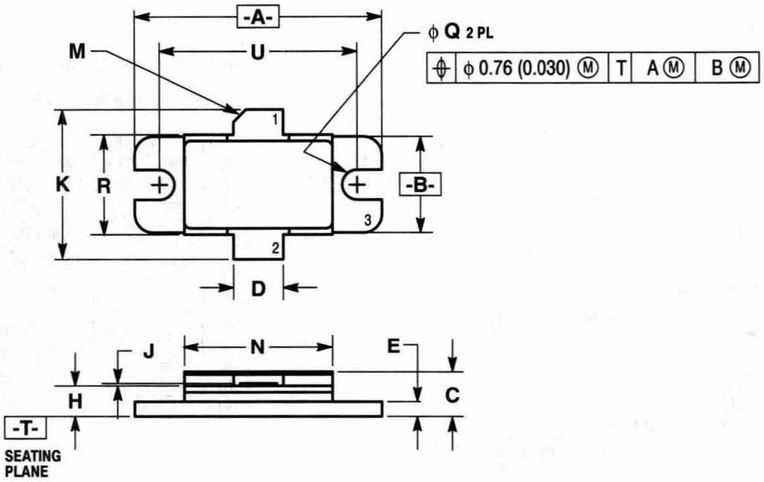

NOTES:
1. DIMENSIONING AND TOLERANCING PER ANSI Y14.5M, 1982.
2. CONTROLLING DIMENSION: INCH.
3. 355D-01 OBSOLETE, NEW STANDARD 355D-02.

DIM	MILLIMETERS MIN	MILLIMETERS MAX	INCHES MIN	INCHES MAX
A	25.15	25.65	0.990	1.010
B	9.53	10.03	0.375	0.395
C	3.81	4.19	0.150	0.165
D	4.95	5.21	0.195	0.205
E	1.40	1.65	0.055	0.065
H	3.05	3.30	0.120	0.130
J	0.08	0.15	0.003	0.006
K	14.48	16.00	0.570	0.630
M	45° REF		45° REF	
N	14.99	15.49	0.590	0.610
Q	2.92	3.18	0.115	0.125
R	10.03	10.29	0.395	0.405
U	20.32 BSC		0.800 BSC	

CASE 355D-02

PACKAGE OUTLINE DIMENSIONS AND FOOTPRINTS (continued)

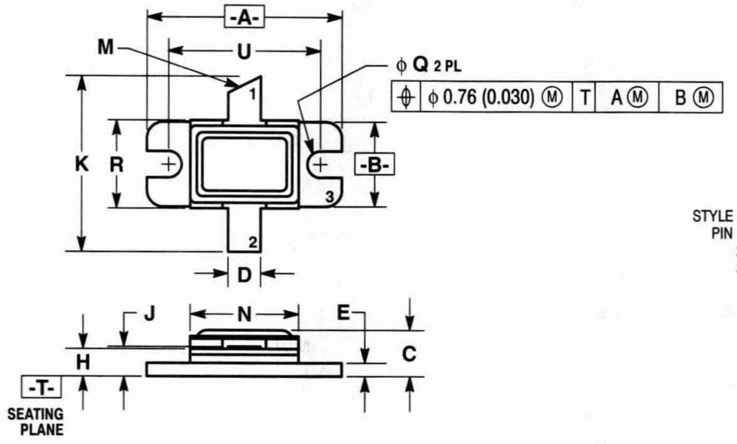

STYLE 1:
PIN 1. COLLECTOR
2. EMITTER
3. BASE

NOTES:
1. DIMENSIONING AND TOLERANCING PER ANSI Y14.5M, 1982.
2. CONTROLLING DIMENSION: INCH.

	MILLIMETERS		INCHES	
DIM	MIN	MAX	MIN	MAX
A	22.61	23.11	0.890	0.910
B	9.53	10.03	0.375	0.395
C	4.83	5.33	0.190	0.210
D	3.69	3.93	0.145	0.155
E	1.40	1.65	0.055	0.065
H	3.05	3.30	0.120	0.130
J	0.08	0.15	0.003	0.006
K	19.56	21.08	0.770	0.830
M	45° REF		45° REF	
N	12.45	12.95	0.490	0.510
Q	2.93	3.17	0.115	0.125
R	10.04	10.28	0.395	0.405
U	17.78 BSC		0.700 BSC	

CASE 355E-01

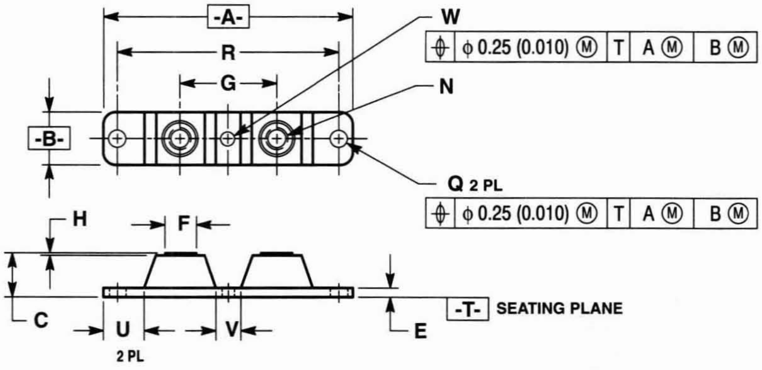

NOTES:
1. DIMENSIONING AND TOLERANCING PER ANSI Y14.5M, 1982.
2. CONTROLLING DIMENSION: INCH.
3. TERMINAL PENETRATION: 5.97(.235) MXIMUM.
4. 357C–01 AND –02 OBSOLETE. NEW STANDARD 357C–03.

	MILLIMETERS		INCHES	
DIM	MIN	MAX	MIN	MAX
A	87.63	92.20	3.450	3.635
B	17.78	20.57	0.700	0.810
C	15.63	16.26	0.615	0.640
E	3.05	3.30	0.120	0.130
F	11.05	11.30	0.435	0.445
G	34.80	35.05	1.370	1.380
H	0.18	0.68	0.007	0.030
N	1/4-20UNC-2B		1/4-20UNC-2B	
Q	6.86	7.23	0.270	0.285
R	80.01 BSC		3.150 BSC	
U	15.24	16.00	0.600	0.630
V	8.39	9.52	0.330	0.375
W	4.32	4.82	0.170	0.190

CASE 357C-03

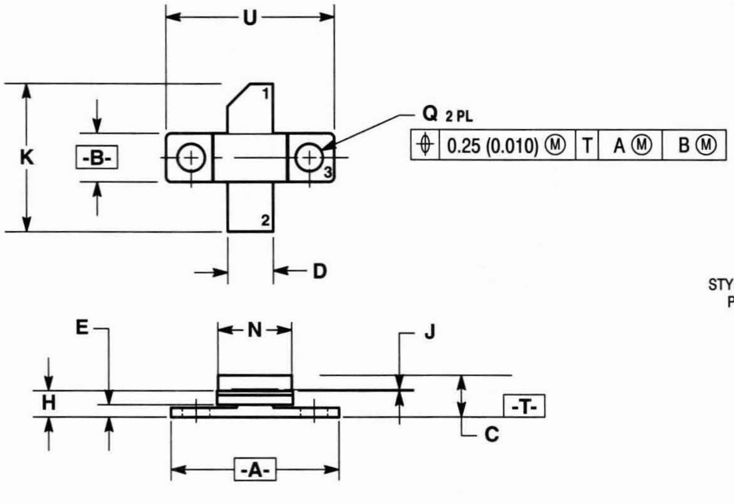

NOTES:
1. DIMENSIONING AND TOLERANCING PER ANSI Y14.5M, 1982.
2. CONTROLLING DIMENSION: INCH

STYLE 1:
PIN 1. COLLECTOR
2. EMITTER
3. BASE

	MILLIMETERS		INCHES	
DIM	MIN	MAX	MIN	MAX
A	20.19	20.45	0.795	0.805
B	5.71	5.97	0.225	0.235
C	4.67	5.49	0.184	0.216
D	5.33	5.59	0.210	0.220
E	1.40	1.65	0.055	0.065
H	2.92	3.43	0.115	0.135
J	0.10	0.15	0.004	0.006
K	17.02	18.54	0.670	0.730
N	8.76	9.02	0.345	0.355
Q	3.18	3.43	0.125	0.135
U	14.22 BSC		0.560 BSC	

CASE 360A-01

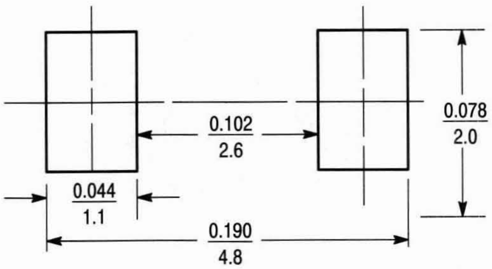

MLL34 FOOTPRINT

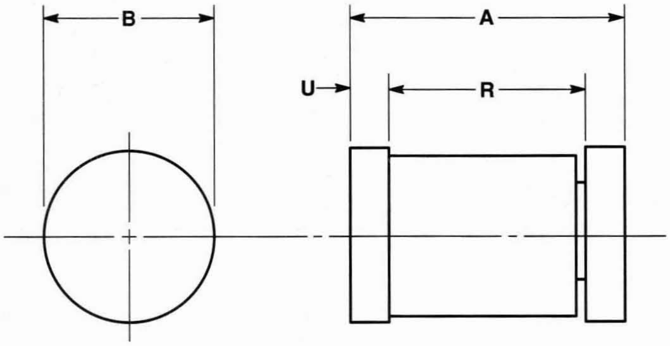

NOTES:
1. DIMENSIONING AND TOLERANCING PER ANSI Y14.5M, 1982.
2. CONTROLLING DIMENSION: INCH.
3. 362-01 OBSOLETE, NEW STANDARD 362-03.

DIM	MILLIMETERS MIN	MILLIMETERS MAX	INCHES MIN	INCHES MAX
A	3.30	3.70	0.130	0.146
B	1.60	1.73	0.063	0.068
R	2.49	—	0.098	—
U	0.41	0.55	0.016	0.022

CASE 362-03

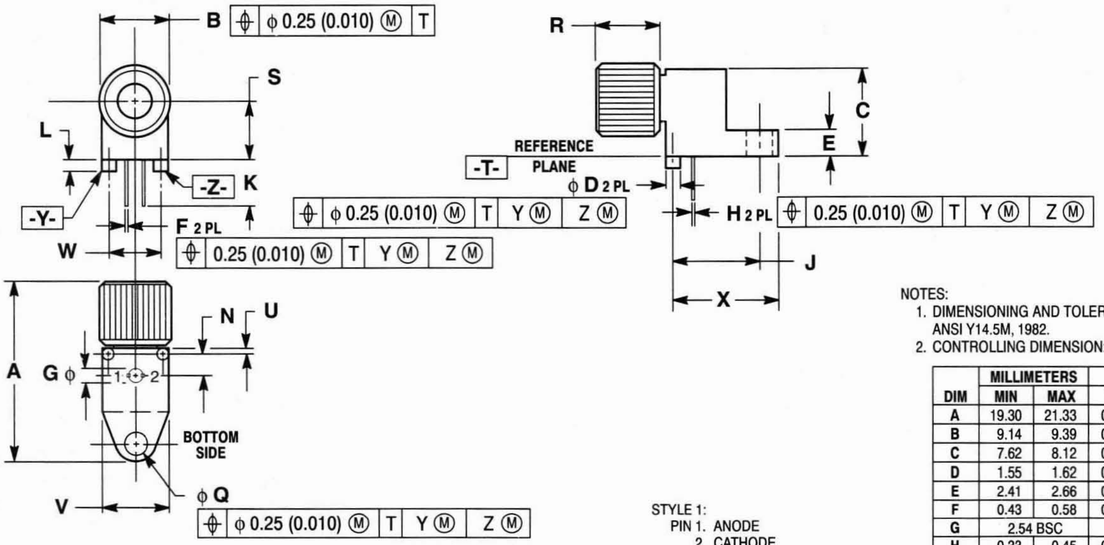

NOTES:
1. DIMENSIONING AND TOLERANCING PER ANSI Y14.5M, 1982.
2. CONTROLLING DIMENSION: INCH.

DIM	MILLIMETERS MIN	MILLIMETERS MAX	INCHES MIN	INCHES MAX
A	19.30	21.33	0.760	0.840
B	9.14	9.39	0.360	0.370
C	7.62	8.12	0.300	0.320
D	1.55	1.62	0.061	0.064
E	2.41	2.66	0.095	0.105
F	0.43	0.58	0.017	0.023
G	2.54 BSC		0.100 BSC	
H	0.33	0.45	0.013	0.018
J	7.62 BSC		0.300 BSC	
K	9.91	11.43	0.390	0.450
L	1.14	1.65	0.045	0.065
N	2.54 BSC		0.100 BSC	
Q	3.05	3.30	0.120	0.130
R	7.62	8.12	0.300	0.320
S	5.08 BSC		0.200 BSC	
U	0.66	0.91	0.026	0.036
V	6.86	7.11	0.270	0.280

STYLE 1:
PIN 1. ANODE
2. CATHODE

STYLE 2:
PIN 1. EMITTER
2. COLLECTOR

STYLE 3:
PIN 1. CATHODE
2. ANODE

CASE 363B-01

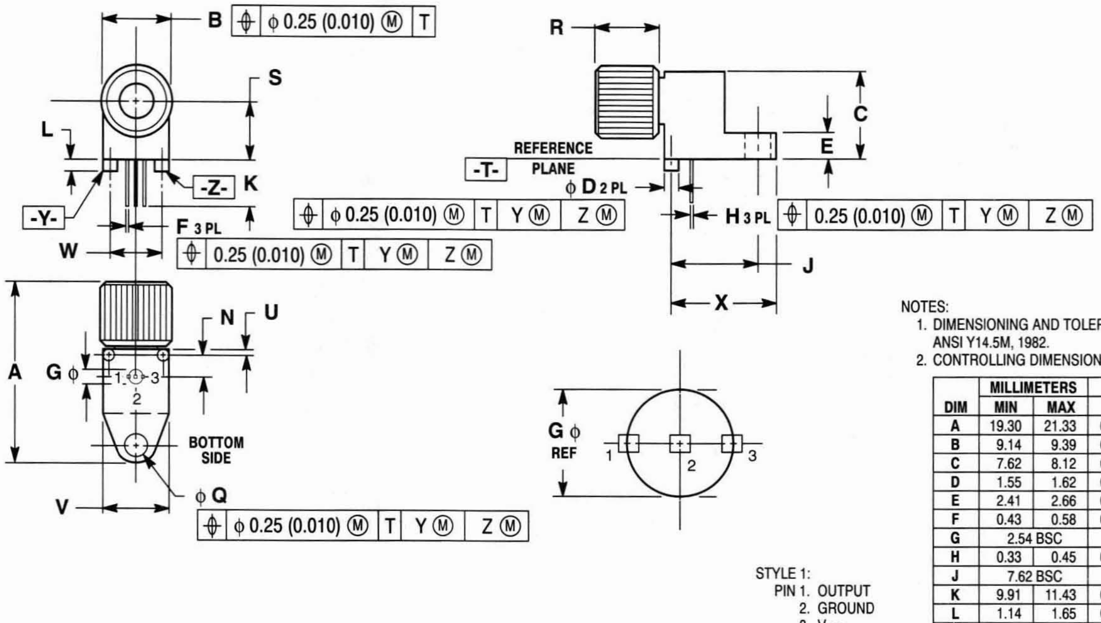

NOTES:
1. DIMENSIONING AND TOLERANCING PER ANSI Y14.5M, 1982.
2. CONTROLLING DIMENSION: INCH.

DIM	MILLIMETERS MIN	MILLIMETERS MAX	INCHES MIN	INCHES MAX
A	19.30	21.33	0.760	0.840
B	9.14	9.39	0.360	0.370
C	7.62	8.12	0.300	0.320
D	1.55	1.62	0.061	0.064
E	2.41	2.66	0.095	0.105
F	0.43	0.58	0.017	0.023
G	2.54 BSC		0.100 BSC	
H	0.33	0.45	0.013	0.018
J	7.62 BSC		0.300 BSC	
K	9.91	11.43	0.390	0.450
L	1.14	1.65	0.045	0.065
N	2.54 BSC		0.100 BSC	
Q	3.05	3.30	0.120	0.130
R	7.62	8.12	0.300	0.320
S	5.08 BSC		0.200 BSC	
U	0.66	0.91	0.026	0.036
V	6.86	7.11	0.270	0.280
W	5.08 BSC		0.200 BSC	
X	10.87	11.55	0.428	0.455

STYLE 1:
PIN 1. OUTPUT
2. GROUND
3. V_{CC}

CASE 363C-01

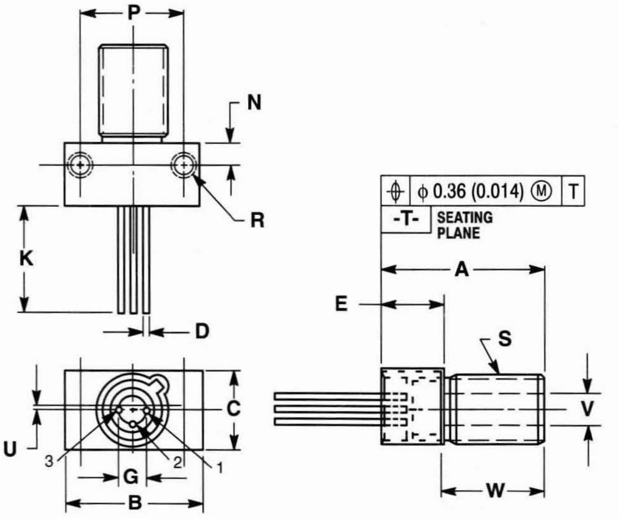

NOTES:
1. DIMENSIONING AND TOLERANCING PER ANSI Y14.5M, 1982.
2. CONTROLLING DIMENSION: INCH

DIM	MILLIMETERS MIN	MILLIMETERS MAX	INCHES MIN	INCHES MAX
A	14.99	15.36	0.590	0.605
B	12.52	12.87	0.493	0.507
C	6.93	7.28	0.273	0.287
D	0.41	0.48	0.016	0.019
E	5.84	6.09	0.230	0.240
G	2.54 BSC		0.100 BSC	
K	9.91	—	0.390	—
N	1.91 BSC		0.075 BSC	
P	9.25 BSC		0.375 BSC	
R	—	—	2.56 UNC 2B	
S	—	—	0.250-36 UNS 2A	
U	0.30 BSC		0.012 BSC	
V	3.175	3.187	0.1250	0.1255
W	9.80	9.85	0.386	0.388

CASE 364-01

PACKAGE OUTLINE DIMENSIONS AND FOOTPRINTS (continued)

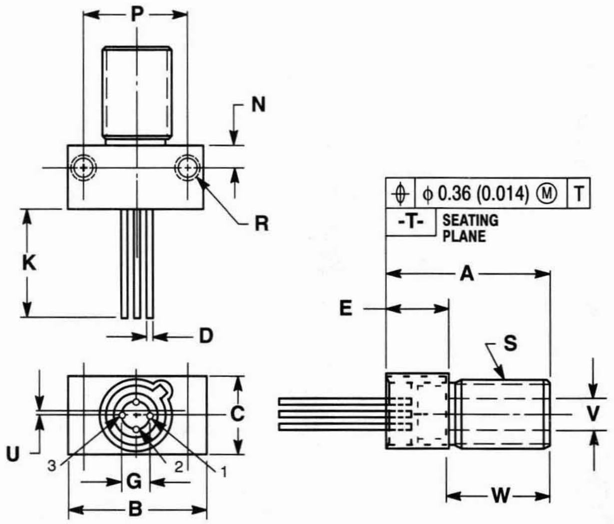

NOTES:
1. DIMENSIONING AND TOLERANCING PER ANSI Y14.5M, 1982.
2. CONTROLLING DIMENSION: INCH

DIM	MILLIMETERS MIN	MILLIMETERS MAX	INCHES MIN	INCHES MAX
A	14.99	15.36	0.590	0.605
B	12.52	12.87	0.493	0.507
C	6.93	7.28	0.273	0.287
D	0.41	0.48	0.016	0.019
E	5.84	6.09	0.230	0.240
G	2.54 BSC		0.100 BSC	
K	9.91	—	0.390	—
N	1.91 BSC		0.075 BSC	
P	9.25 BSC		0.375 BSC	
R	—	—	2.56 UNC 2B	
S	—	—	0.250-36 UNS 2A	
U	0.30 BSC		0.012 BSC	
V	3.175	3.187	0.1250	0.1255
W	9.80	9.85	0.386	0.388

CASE 364A-01

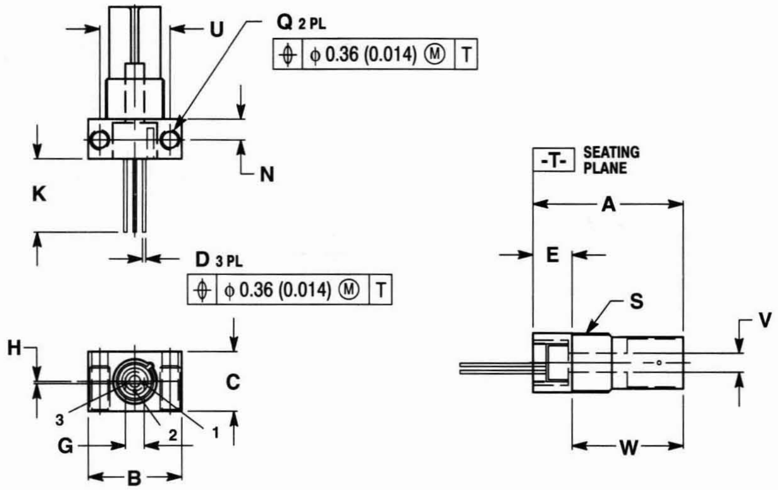

NOTES:
1. DIMENSIONING AND TOLERANCING PER ANSI Y14.5M, 1982.
2. CONTROLLING DIMENSION: INCH.

DIM	MILLIMETERS MIN	MILLIMETERS MAX	INCHES MIN	INCHES MAX
A	20.29	20.55	0.799	0.809
B	12.57	12.83	0.495	0.505
C	7.85	8.10	0.309	0.319
D	0.41	0.48	0.016	0.019
E	5.21	5.46	0.205	0.215
G	2.54 BSC		0.100 BSC	
H	0.30 BSC		0.012 BSC	
K	9.91	—	0.390	—
N	1.90 BSC		0.075 BSC	
Q	—		2.56UNC-2B	
S	—		.250-36UNS-2A	
U	9.52 BSC		0.375 BSC	
V	2.499	2.626	0.0984	0.1034
W	14.83	15.34	0.584	0.604

CASE 364B-01

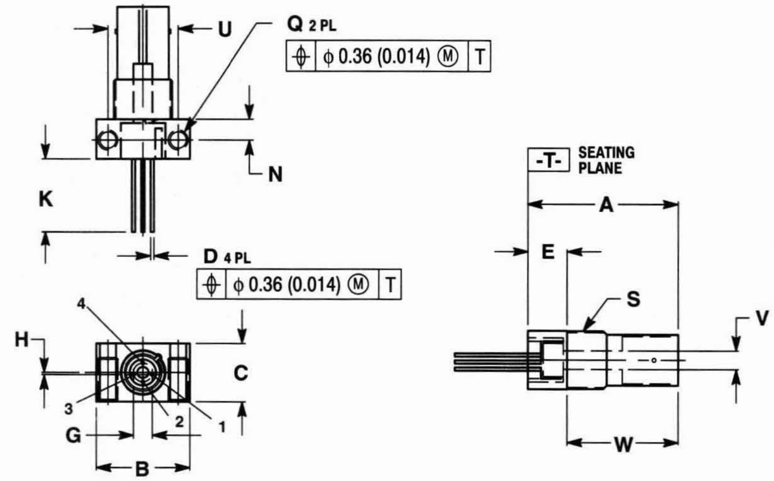

NOTES:
1. DIMENSIONING AND TOLERANCING PER ANSI Y14.5M, 1982.
2. CONTROLLING DIMENSION: INCH.

DIM	MILLIMETERS MIN	MILLIMETERS MAX	INCHES MIN	INCHES MAX
A	20.29	20.55	0.799	0.809
B	12.57	12.83	0.495	0.505
C	7.85	8.10	0.309	0.319
D	0.41	0.48	0.016	0.019
E	5.21	5.46	0.205	0.215
G	2.54 BSC		0.100 BSC	
H	0.30 BSC		0.012 BSC	
K	9.91	—	0.390	—
N	1.90 BSC		0.075 BSC	
Q	—		2.56UNC-2B	
S	—		.250-36UNS-2A	
U	9.52 BSC		0.375 BSC	
V	2.499	2.626	0.0984	0.1034
W	14.83	15.34	0.584	0.604

CASE 364C-01

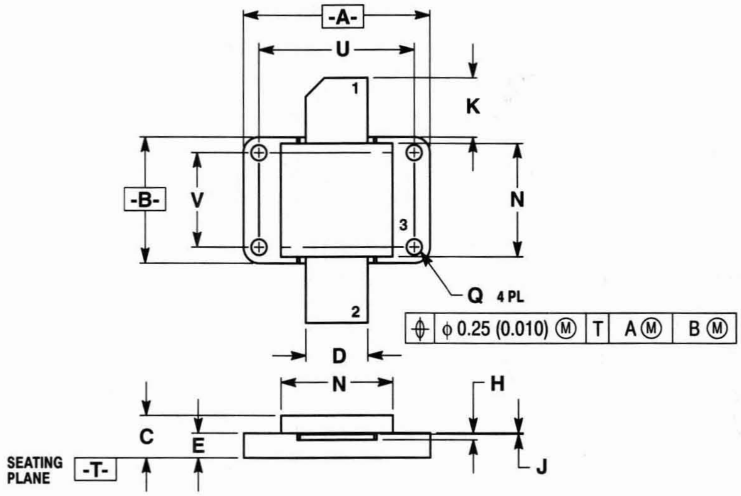

STYLE 1:
PIN 1. COLLECTOR
2. BASE
3. EMITTER

STYLE 2:
PIN 1. DRAIN
2. GATE
3. SOURCE

NOTES:
1. DIMENSIONING AND TOLERANCING PER ANSI Y14.5M, 1982.
2. CONTROLLING DIMENSION: INCH.
3. 368-01 OBSOLETE, NEW STANDARD 368-02.

DIM	MILLIMETERS		INCHES	
	MIN	MAX	MIN	MAX
A	37.85	38.35	1.490	1.510
B	25.15	25.65	0.990	1.010
C	8.38	8.89	0.330	0.350
D	12.45	12.95	0.490	0.510
E	4.95	5.21	0.195	0.205
H	1.14	1.39	0.045	0.055
J	0.10	0.15	0.004	0.006
K	10.80	12.70	0.425	0.500
N	22.87	23.11	0.890	0.910
Q	3.05	3.30	0.120	0.130
U	31.75 BSC		1.250 BSC	
V	19.05 BSC		0.750 BSC	

CASE 368-02

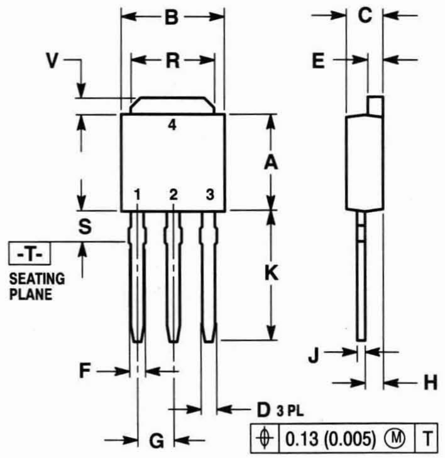

STYLE 1:
PIN 1. BASE
2. COLLECTOR
3. EMITTER
4. COLLECTOR

STYLE 2:
PIN 1. GATE
2. DRAIN
3. SOURCE
4. DRAIN

STYLE 5:
PIN 1. GATE
2. ANODE
3. CATHODE
4. ANODE

NOTES:
1. DIMENSIONING AND TOLERANCING PER ANSI Y14.5M, 1982.
2. CONTROLLING DIMENSION: INCH.
3. 369-01 THRU -05 OBSOLETE, NEW STANDARD 369-06.

DIM	MILLIMETERS		INCHES	
	MIN	MAX	MIN	MAX
A	5.97	6.22	0.235	0.245
B	6.35	6.73	0.250	0.265
C	2.19	2.38	0.086	0.094
D	0.69	0.88	0.027	0.035
E	0.84	1.01	0.033	0.040
F	0.94	1.19	0.037	0.047
G	2.29 BSC		0.090 BSC	
H	0.87	1.01	0.034	0.040
J	0.46	0.58	0.018	0.023
K	8.89	9.65	0.350	0.380
R	4.45	5.46	0.175	0.215
S	1.27	2.28	0.050	0.090
V	0.77	1.27	0.030	0.050

CASE 369-06

PACKAGE OUTLINE DIMENSIONS AND FOOTPRINTS (continued)

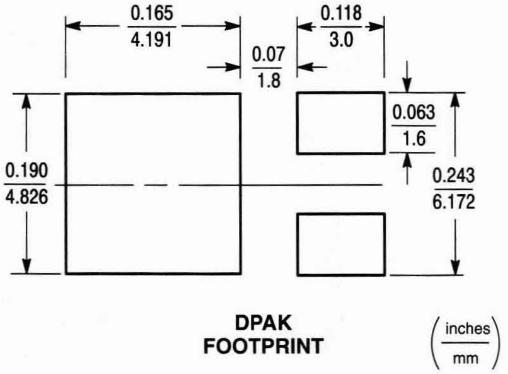

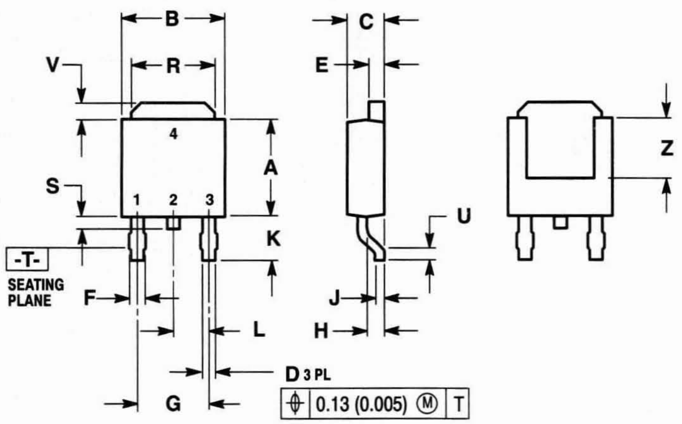

STYLE 1:
PIN 1. BASE
2. COLLECTOR
3. EMITTER
4. COLLECTOR

STYLE 2:
PIN 1. GATE
2. DRAIN
3. SOURCE
4. DRAIN

STYLE 3:
PIN 1. ANODE
2. CATHODE
3. ANODE
4. CATHODE

STYLE 5:
PIN 1. GATE
2. ANODE
3. CATHODE
4. ANODE

NOTES:
1. DIMENSIONING AND TOLERANCING PER ANSI Y14.5M, 1982.
2. CONTROLLING DIMENSION: INCH.
3. 369A-01 THRU -03 OBSOLETE.
4. 369A-04 THRU -09 OBSOLETE, NEW STANDARD 369A-10.

DIM	MILLIMETERS		INCHES	
	MIN	MAX	MIN	MAX
A	5.97	6.22	0.235	0.245
B	6.35	6.73	0.250	0.265
C	2.19	2.38	0.086	0.094
D	0.69	0.88	0.027	0.035
E	0.84	1.01	0.033	0.040
F	0.94	1.19	0.037	0.047
G	4.58 BSC		0.180 BSC	
H	0.87	1.01	0.034	0.040
J	0.46	0.58	0.018	0.023
K	2.60	2.89	0.102	0.114
L	2.29 BSC		0.090 BSC	
R	4.45	5.46	0.175	0.215
S	0.51	1.27	0.020	0.050
U	0.51	—	0.020	—
V	0.77	1.27	0.030	0.050
Z	3.51	—	0.138	—

CASE 369A-10

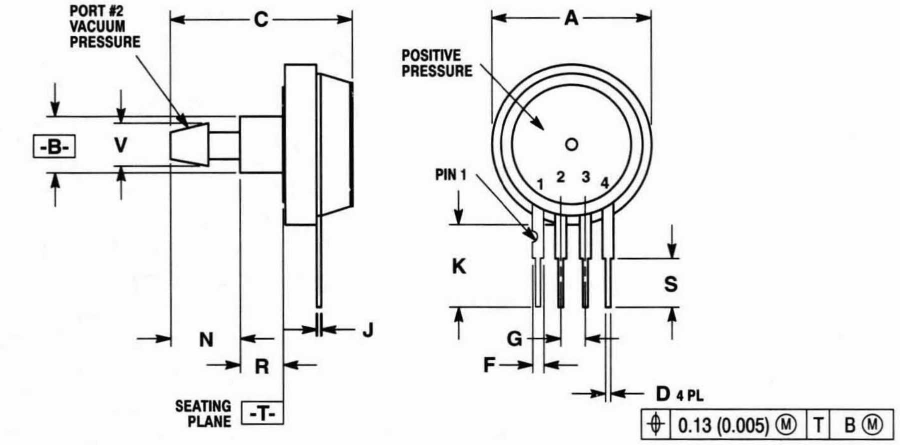

NOTES:
1. DIMENSIONING AND TOLERANCING PER ANSI Y14.5M, 1982.
2. CONTROLLING DIMENSION: INCH.
3. 371-01 AND -03 OBSOLETE, NEW STANDARD 371-05.

DIM	MILLIMETERS		INCHES	
	MIN	MAX	MIN	MAX
A	17.53	18.28	0.690	0.720
B	6.28	6.42	0.247	0.253
C	19.81	20.82	0.780	0.820
D	0.41	0.50	0.016	0.020
F	1.22	1.32	0.048	0.052
G	2.54 BSC		0.100 BSC	
J	0.36	0.40	0.014	0.016
K	8.51	9.27	0.335	0.365
N	7.75	8.00	0.305	0.315
R	4.53	4.69	0.178	0.185
S	5.84 REF		0.230 REF	
V	4.63	4.92	0.182	0.194

CASE 371-05

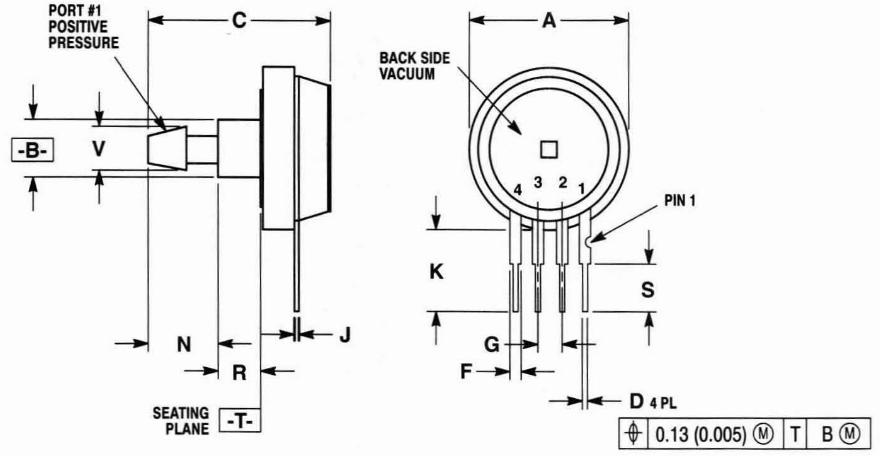

CASE 371-06

NOTES:
1. DIMENSIONING AND TOLERANCING PER ANSI Y14.5M, 1982.
2. CONTROLLING DIMENSION: INCH.
3. 371-02 AND -04 OBSOLETE, NEW STANDARD 371-06.

DIM	MILLIMETERS MIN	MILLIMETERS MAX	INCHES MIN	INCHES MAX
A	17.53	18.28	0.690	0.720
B	6.28	6.42	0.247	0.253
C	19.81	20.82	0.780	0.820
D	0.41	0.50	0.016	0.020
F	1.22	1.32	0.048	0.052
G	2.54 BSC		0.100 BSC	
J	0.36	0.40	0.014	0.016
K	8.51	9.27	0.335	0.365
N	7.75	8.00	0.305	0.315
R	4.53	4.69	0.178	0.185
S	5.84 REF		0.230 REF	
V	4.63	4.92	0.182	0.194

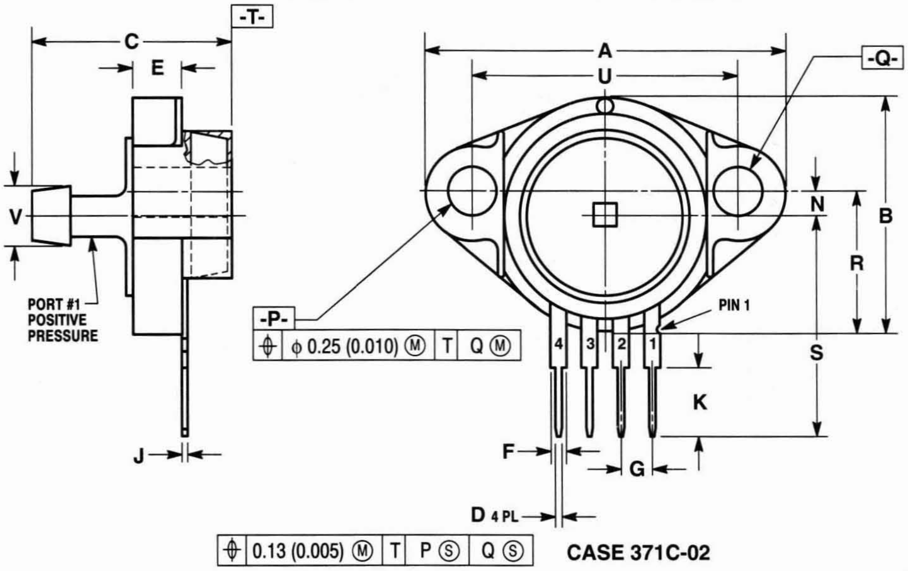

CASE 371C-02

NOTES:
1. DIMENSIONING AND TOLERANCING PER ANSI Y14.5M, 1982.
2. CONTROLLING DIMENSION: INCH.
3. 371C-01 OBSOLETE, NEW STANDARD 371C-02.

DIM	MILLIMETERS MIN	MILLIMETERS MAX	INCHES MIN	INCHES MAX
A	27.94	30.48	1.100	1.200
B	18.80	19.30	0.740	0.760
C	16.13	16.51	0.635	0.650
D	0.41	0.50	0.016	0.020
E	4.06	4.57	0.160	0.180
F	1.22	1.32	0.048	0.052
G	2.54 BSC		0.100 BSC	
J	0.36	0.40	0.014	0.016
K	5.84 REF		0.230 REF	
N	1.78	2.03	0.070	0.080
P	3.81	4.06	0.150	0.160
Q	3.81	4.06	0.150	0.160
R	11.30	11.68	0.445	0.460
S	17.40	18.16	0.685	0.715
U	21.33	21.84	0.840	0.860
V	4.69	4.95	0.185	0.195

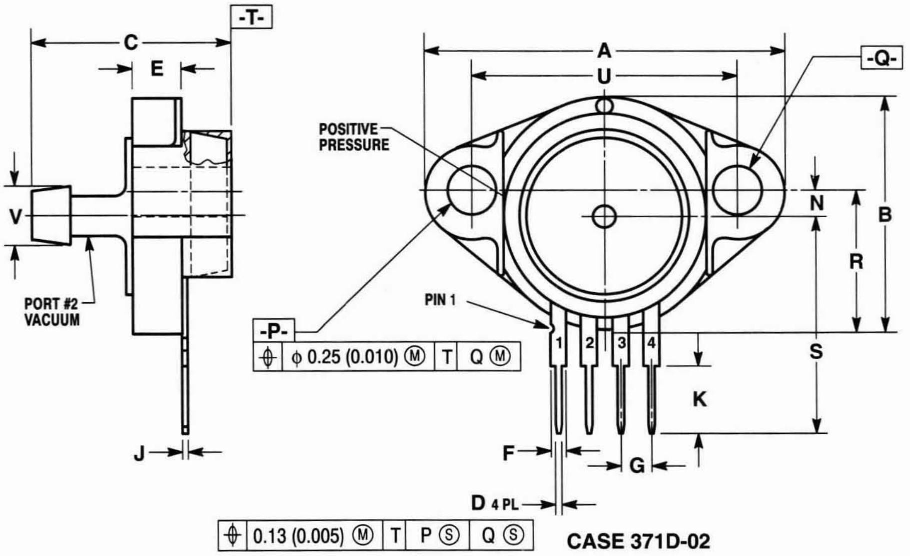

CASE 371D-02

NOTES:
1. DIMENSIONING AND TOLERANCING PER ANSI Y14.5M, 1982.
2. CONTROLLING DIMENSION: INCH.
3. 371D-01 OBSOLETE, NEW STANDARD 371D-02.

DIM	MILLIMETERS MIN	MILLIMETERS MAX	INCHES MIN	INCHES MAX
A	27.94	30.48	1.100	1.200
B	18.80	19.30	0.740	0.760
C	16.13	16.51	0.635	0.650
D	0.41	0.50	0.016	0.020
E	4.06	4.57	0.160	0.180
F	1.22	1.32	0.048	0.052
G	2.54 BSC		0.100 BSC	
J	0.36	0.40	0.014	0.016
K	5.84 REF		0.230 REF	
N	1.78	2.03	0.070	0.080
P	3.81	4.06	0.150	0.160
Q	3.81	4.06	0.150	0.160
R	11.30	11.68	0.445	0.460
S	17.40	18.16	0.685	0.715
U	21.33	21.84	0.840	0.860
V	4.69	4.95	0.185	0.195

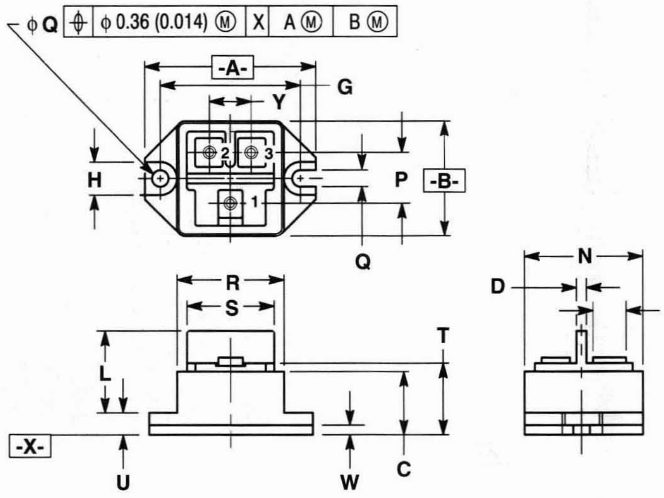

NOTES:
1. DIMENSIONING AND TOLERANCING PER ANSI Y14.5M, 1982.
2. CONTROLLING DIMENSION: MILLIMETER.
3. TERMINALS 1,2 AND 3 USE 3-M4 SCREW.

	MILLIMETERS		INCHES	
DIM	MIN	MAX	MIN	MAX
A	52.5	53.5	2.067	2.106
B	35.0	36.0	1.378	1.417
C	19.3	19.7	0.760	0.775
D	2.7	3.3	0.107	0.129
F	8.7	9.3	0.343	0.366
G	43.3 BSC		1.704 BSC	
H	9.8	10.8	0.386	0.425
L	31.0	33.0	1.221	1.299
N	28.5	29.5	1.122	1.161
P	15.0	16.0	0.591	0.629
Q	4.9	5.5	0.193	0.216
R	32.5	33.5	1.280	1.318
S	26.5	27.5	1.044	1.082
T	21.5	22.5	0.847	0.885
U	6.5	7.5	0.256	0.295
W	2.7	3.3	0.107	0.129
Y	12.5	13.5	0.493	0.531

CASE 373-01

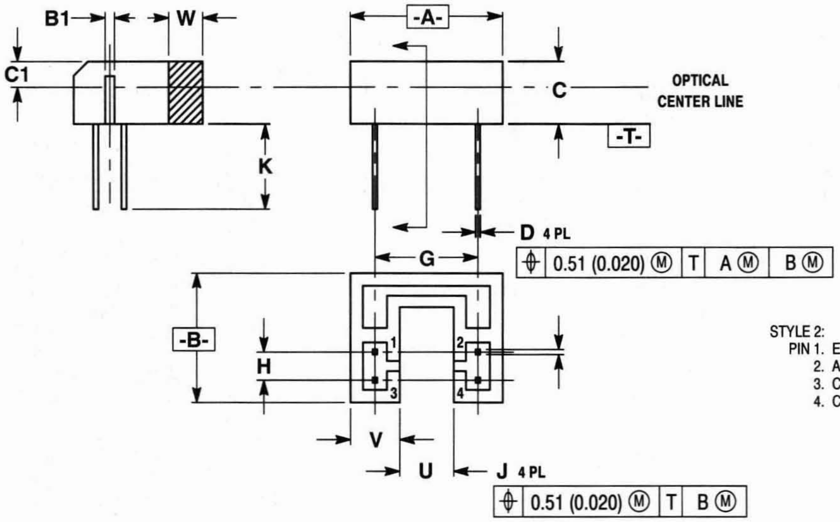

NOTES:
1. DIMENSIONING AND TOLERANCING PER ANSI Y14.5M, 1982.
2. CONTROLLING DIMENSION: INCH.

STYLE 2:
PIN 1. EMITTER
2. ANODE
3. COLLECTOR
4. CATHODE

	MILLIMETERS		INCHES	
DIM	MIN	MAX	MIN	MAX
A	13.72	13.84	0.540	0.545
B	11.59	11.70	0.456	0.461
C	5.57	5.71	0.219	0.225
D	0.35	0.55	0.014	0.022
G	9.30 BSC		0.366 BSC	
H	2.54 BSC		0.100 BSC	
J	0.43	0.55	0.017	0.022
K	7.37	7.87	0.290	0.310
U	4.80	4.92	0.189	0.194
V	4.42	4.57	0.174	0.180
W	3.00	3.14	0.118	0.124
B1	0.84	1.02	0.033	0.040
C1	2.41 NOM		0.095 NOM	

CASE 374-01

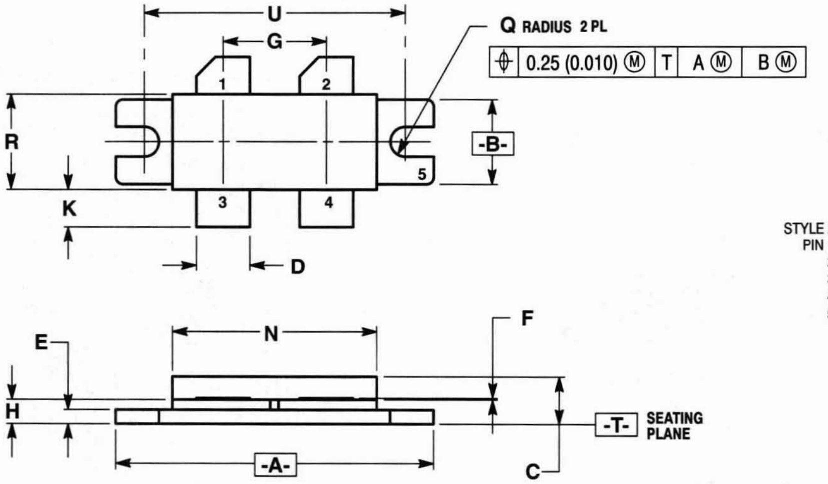

NOTES:
1. DIMENSIONING AND TOLERANCING PER ANSI Y14.5M, 1982.
2. CONTROLLING DIMENSION: INCH.
3. 375-01 AND -02 OBSOLETE, NEW STANDARD 375-03.

STYLE 2:
PIN 1. DRAIN
2. DRAIN
3. GATE
4. GATE
5. SOURCE

	MILLIMETERS		INCHES	
DIM	MIN	MAX	MIN	MAX
A	33.79	34.29	1.330	1.350
B	9.40	10.41	0.370	0.410
C	4.83	5.84	0.190	0.230
D	5.47	5.96	0.215	0.235
E	1.27	1.77	0.050	0.070
G	10.92	11.18	0.430	0.440
H	2.59	2.84	0.102	0.112
J	0.11	0.15	0.004	0.006
K	4.83	5.33	0.185	0.215
N	21.46	22.23	0.845	0.875
Q	1.35	1.87	0.053	0.074
R	9.91	10.41	0.390	0.410
U	27.94 BSC		1.100 BSC	

CASE 375-03

PACKAGE OUTLINE DIMENSIONS AND FOOTPRINTS (continued)

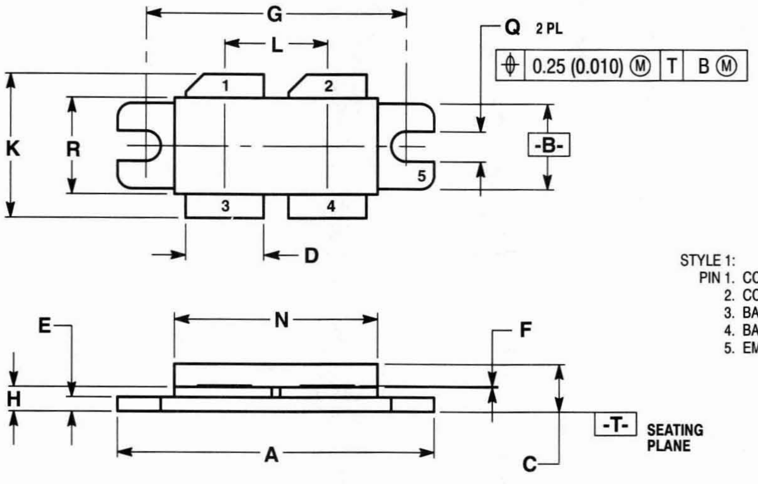

STYLE 1:
PIN 1. COLLECTOR
2. COLLECTOR
3. BASE
4. BASE
5. EMITTER

NOTES:
1. DIMENSIONING AND TOLERANCING PER ANSI Y14.5M, 1982.
2. CONTROLLING DIMENSION: INCH.

	MILLIMETERS		INCHES	
DIM	MIN	MAX	MIN	MAX
A	33.79	34.29	1.330	1.350
B	9.52	10.03	0.375	0.395
C	4.57	5.21	0.180	0.205
D	8.13	8.64	0.320	0.340
E	1.52	1.77	0.060	0.070
F	0.11	0.15	0.004	0.006
G	27.94 BSC		1.100 BSC	
H	2.08	2.46	0.082	0.097
K	14.73	15.75	0.580	0.620
L	11.05 BSC		0.435 BSC	
N	21.46	22.23	0.845	0.875
Q	3.00	3.30	0.118	0.130
R	9.91	10.41	0.390	0.410

CASE 375A-01

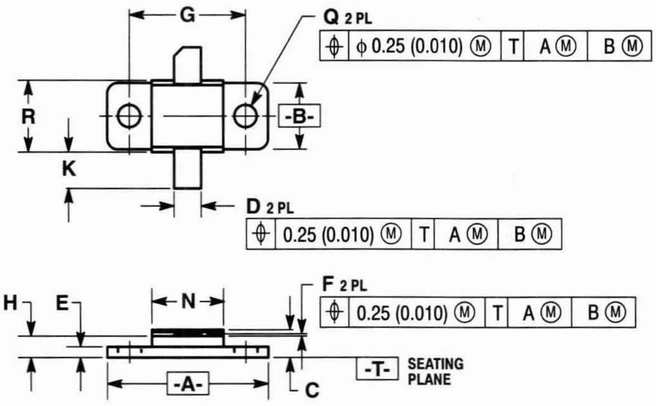

STYLE 1:
PIN 1. COLLECTOR
2. EMITTER
3. BASE

NOTES:
1. DIMENSIONING AND TOLERANCING PER ANSI Y14.5M, 1982.
2. CONTROLLING DIMENSION: INCH.
3. 376B-01 OBSOLETE, NEW STANDARD 376B-02.

	MILLIMETERS		INCHES	
DIM	MIN	MAX	MIN	MAX
A	22.61	23.11	0.890	0.910
B	9.40	10.16	0.370	0.400
C	3.69	4.06	0.145	0.160
D	3.56	4.06	0.140	0.160
E	1.40	1.65	0.055	0.065
F	0.08	0.15	0.003	0.006
G	16.51 BSC		0.650 BSC	
H	2.80	3.30	0.110	0.130
K	4.57	5.591	0.180	0.220
N	9.91	10.41	0.390	0.410
Q	2.93	3.42	0.115	0.135
R	9.91	10.41	0.390	0.410

CASE 376B-02

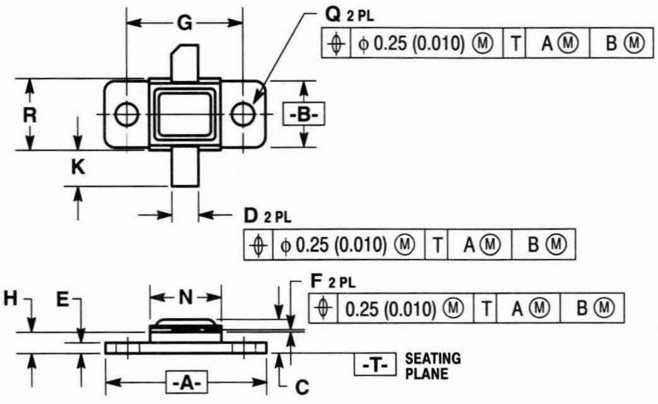

STYLE 1:
PIN 1. COLLECTOR
2. EMITTER
3. BASE

NOTES:
1. DIMENSIONING AND TOLERANCING PER ANSI Y14.5M, 1982.
2. CONTROLLING DIMENSION: INCH.

	MILLIMETERS		INCHES	
DIM	MIN	MAX	MIN	MAX
A	22.61	23.11	0.890	0.910
B	9.40	10.16	0.370	0.400
C	4.83	5.33	0.190	0.210
D	3.56	4.06	0.140	0.160
E	1.40	1.65	0.055	0.065
F	0.08	0.15	0.003	0.006
G	16.51 BSC		0.650 BSC	
H	2.80	3.30	0.110	0.130
K	4.57	5.59	0.180	0.220
N	9.91	10.41	0.390	0.410
Q	2.93	3.42	0.115	0.135
R	9.91	10.41	0.390	0.410

CASE 376C-01

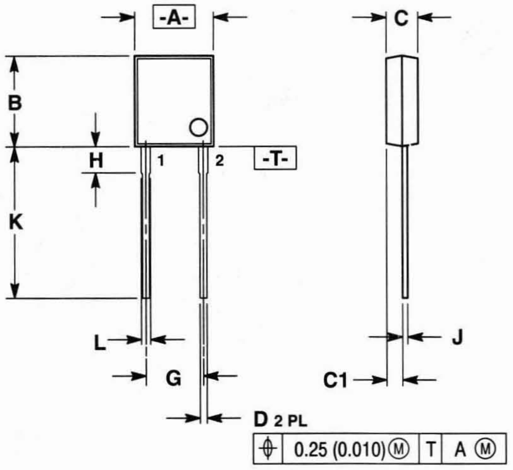

STYLE 1:
PIN 1. ANODE
2. CATHODE

NOTES:
1. DIMENSIONING AND TOLERANCING PER ANSI Y14.5M, 1982.
2. CONTROLLING DIMENSION: INCH.

DIM	MILLIMETERS MIN	MILLIMETERS MAX	INCHES MIN	INCHES MAX
A	6.81	7.21	0.268	0.284
B	7.80	8.20	0.307	0.323
C	2.59	2.99	0.102	0.118
D	0.51	0.76	0.020	0.030
G	5.28 BSC		0.208 BSC	
H	2.19	2.43	0.086	0.096
J	0.036	0.045	0.014	0.018
K	11.99	13.99	0.472	0.551
L	0.64	0.88	0.025	0.035
C1	1.30	1.49	0.051	0.059

CASE 381-01

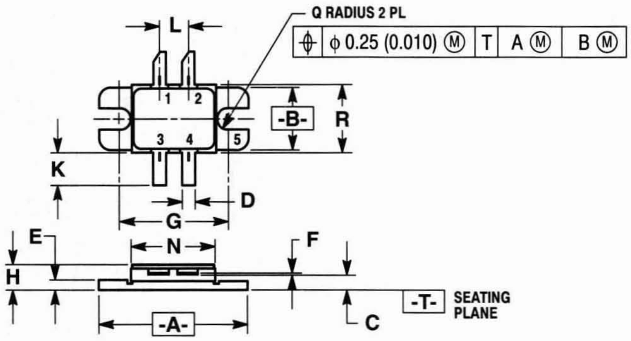

STYLE 1:
PIN 1. COLLECTOR
2. COLLECTOR
3. BASE
4. BASE
5. EMITTER

NOTES:
1. DIMENSIONING AND TOLERANCING PER ANSI Y14.5M, 1982
2. CONTROLLING DIMENSION: INCH.

DIM	MILLIMETERS MIN	MILLIMETERS MAX	INCHES MIN	INCHES MAX
A	22.61	23.11	0.890	0.910
B	9.40	10.16	0.370	0.400
C	2.67	3.42	0.105	0.135
D	1.66	2.15	0.065	0.085
E	1.40	1.65	0.055	0.065
F	0.08	0.15	0.003	0.006
G	16.51 BSC		0.650 BSC	
H	3.81	4.44	0.150	0.175
K	4.83	5.33	0.190	0.210
L	3.94	4.82	0.155	0.190
N	12.45	12.95	0.490	0.510
Q	1.53	1.77	0.060	0.070
R	9.91	10.41	0.390	0.410

CASE 382-01

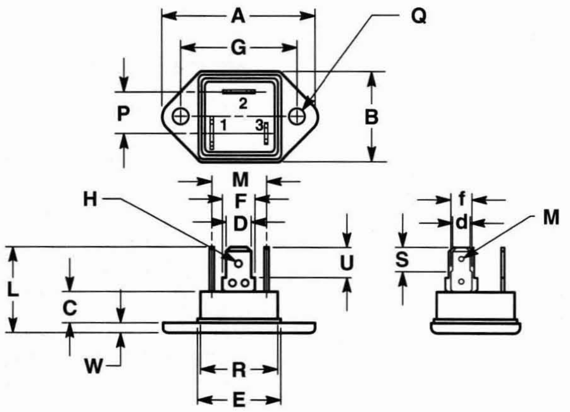

STYLE 1:
PIN 1. MT1
2. MT2
3. GATE

NOTES:
1. DIMENSIONING AND TOLERANCING PER ANSI Y14.5M, 1982.
2. CONTROLLING DIMENSION: MILLIMETER

DIM	MILLIMETERS MIN	MILLIMETERS MAX	INCHES MIN	INCHES MAX
A	—	39.20	—	1.543
B	—	23.00	—	0.905
C	—	8.20	—	0.322
D	5.55	7.15	0.219	0.281
E	—	21.60	—	0.850
F	7.45	9.05	0.294	0.356
G	29.90	30.10	1.178	1.185
H	1.65	2.20	0.065	0.086
L	—	22.50	—	0.885
M	1.30	1.57	0.052	0.061
N	13.85	14.15	0.546	0.557
P	10.55	10.85	0.416	0.427
Q	4.10	4.30	0.162	0.169
R	—	20.10	—	0.791
S	6.20	6.50	0.244	0.255
U	7.80	8.10	0.307	0.318
W	2.30	2.90	0.091	0.114
d	4.58	5.08	0.180	0.200
f	5.34	5.58	0.210	0.220

CASE 383-01

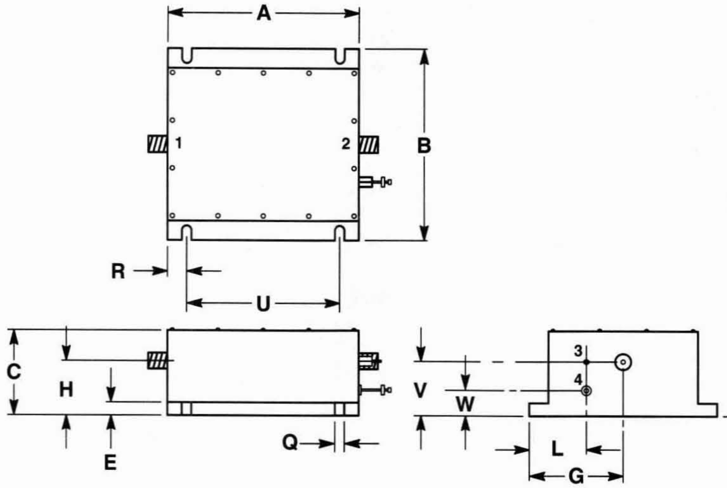

STYLE 1:
PIN 1. RF INPUT
2. RF OUTPUT
3. +28V
4. GROUND

NOTES:
1. DIMENSIONING AND TOLERANCING PER ANSI Y14.5M, 1982.
2. CONTROLLING DIMENSION: INCH.

DIM	MILLIMETERS MIN	MILLIMETERS MAX	INCHES MIN	INCHES MAX
A	75.82	76.58	2.985	3.015
B	74.55	75.31	2.935	2.965
C	33.28	34.03	1.310	1.340
E	4.83	5.33	0.190	0.210
G	37.22	37.72	1.465	1.485
H	20.83	21.33	0.820	0.840
L	22.61	23.11	0.890	0.910
Q	3.56	4.06	0.140	0.160
R	7.37	7.87	0.290	0.310
U	60.58	61.34	2.385	2.415
V	21.34	21.84	0.840	0.860
W	9.91	10.41	0.390	0.410

CASE 389-01

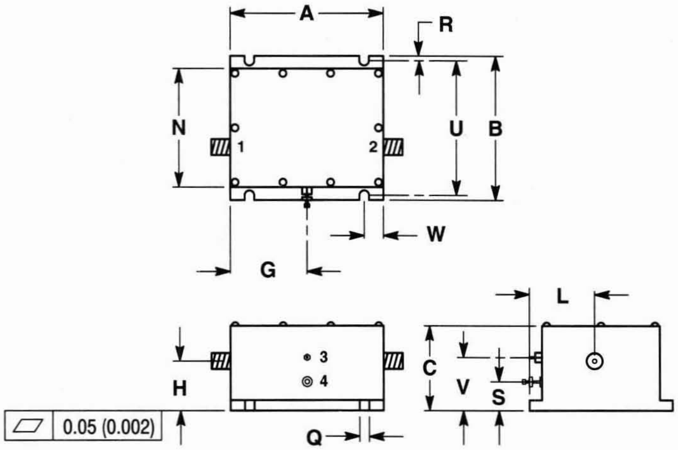

STYLE 1:
PIN 1. RF INPUT
2. RF OUTPUT
3. +28V
4. GROUND

NOTES:
1. DIMENSIONING AND TOLERANCING PER ANSI Y14.5M, 1982.
2. CONTROLLING DIMENSION: INCH.

DIM	MILLIMETERS MIN	MILLIMETERS MAX	INCHES MIN	INCHES MAX
A	60.71	61.21	2.390	2.410
B	56.90	57.40	2.240	2.260
C	33.41	33.90	1.315	1.335
G	30.23	30.73	1.190	1.210
H	19.56	19.68	0.770	0.775
L	20.71	21.20	0.815	0.835
N	41.53	42.29	1.635	1.665
Q	3.56	4.06	0.140	0.160
R	3.56	4.06	0.140	0.160
S	11.18	11.68	0.440	0.460
U	49.15	49.91	1.935	1.965
V	20.83	21.33	0.820	0.840
W	7.37	7.87	0.290	0.310

CASE 389A-01

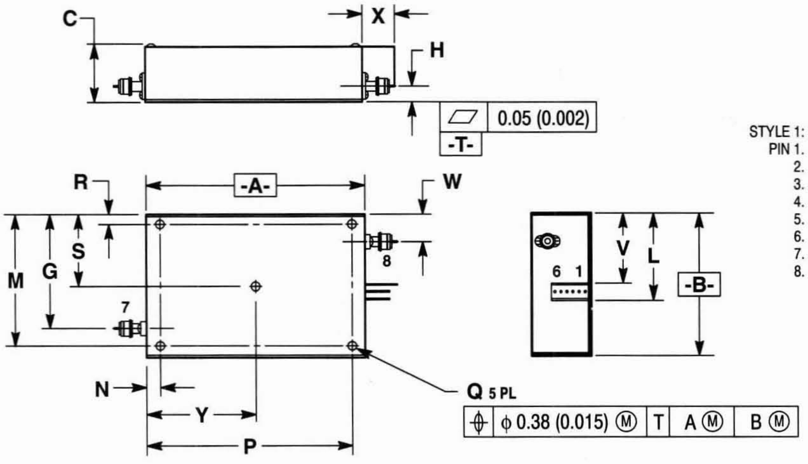

STYLE 1:
PIN 1. +V SUPPLY 26.5V
2. DO NOT USE
3. GROUND
4. TEST POINT (Ic1)
5. TEST POINT (Ic2)
6. OPTION
7. RF INPUT
8. RF OUTPUT

NOTES:
1. DIMENSIONING AND TOLERANCING PER ANSI Y14.5M, 1982.
2. CONTROLLING DIMENSION: MILLIMETERS.
3. 389B-01 OBSOLETE, NEW STANDARD 389B-02.

DIM	MILLIMETERS MIN	MILLIMETERS MAX	INCHES MIN	INCHES MAX
A	133.7	134.2	5.26	5.28
B	—	86.0	—	3.38
C	—	36.2	—	1.42
G	68.1	68.3	2.68	2.70
H	9.1	9.7	0.36	0.38
L	51.2	51.5	2.02	2.03
M	79.6 BSC		3.13 BSC	
N	8.5 BSC		0.33 BSC	
P	125.5 BSC		4.94 BSC	
Q	4.4	4.6	0.17	0.18
R	6.2 BSC		0.24 BSC	
S	35.2 BSC		1.38 BSC	
V	42.1	42.6	1.66	1.68
W	17.5	17.9	0.69	0.70
X	—	13.5	—	0.53
Y	67.0 BSC		2.64 BSC	

CASE 389B-02

PACKAGE OUTLINE DIMENSIONS AND FOOTPRINTS (continued)

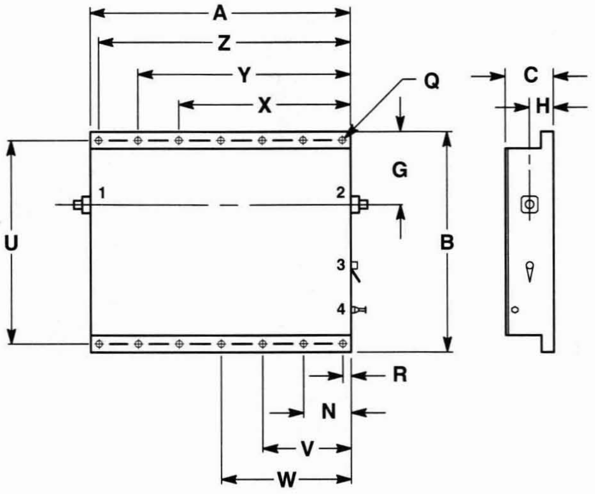

STYLE 1:
PIN 1. RF OUTPUT
2. RF INPUT
3. GROUND
4. DC POWER

NOTES:
1. DIMENSIONING AND TOLERANCING PER ANSI Y14.5M, 1982.
2. CONTROLLING DIMENSION: INCH.

DIM	MILLIMETERS		INCHES	
	MIN	MAX	MIN	MAX
A	159.01	159.51	6.260	6.280
B	134.37	134.87	5.290	5.310
C	29.04	30.04	1.143	1.183
G	34.04	34.54	1.340	1.360
H	14.61	15.11	0.575	0.595
N	28.96	29.46	1.140	1.160
Q	3.92	4.16	0.154	0.164
R	4.96	5.20	0.195	0.205
U	124.21	124.71	4.890	4.910
V	53.85	54.35	2.120	2.140
W	79.38	79.88	3.125	3.145
X	104.91	105.41	4.130	4.150
Y	129.80	130.30	5.110	5.130
Z	153.93	154.43	6.060	6.080

CASE 389C-01

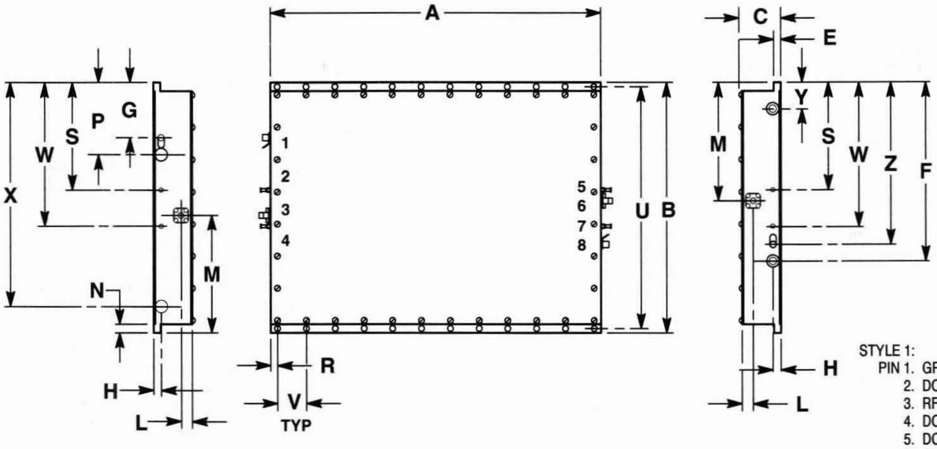

NOTES:
1. DIMENSIONING AND TOLERANCING PER ANSI Y14.5M, 1982.
2. CONTROLLING DIMENSION: INCH.

DIM	MILLIMETERS		INCHES	
	MIN	MAX	MIN	MAX
A	291.3	291.84	11.470	11.49
B	4	220.21	8.650	0
C	219.7	37.08	1.440	8.670
E	1	6.60	0.240	1.460
F	36.58	157.09	6.165	0.260
G	6.10	48.51	1.890	6.185
H	156.6	7.36	0.270	1.910
L	0	10.03	0.375	0.290
M	48.01	103.88	4.070	0.395
N	[illegible]	7.87	0.290	4.090
P	[illegible]	63.37	2.475	0.310
R	[illegible]	6.35	0.230	2.495
S	[illegible]	94.23	3.690	[illegible]
U	212.09	212.59	8.350	8.730
V	25.15	25.65	0.990	1.010
W	125.73	126.23	4.950	4.970
X	196.47	196.97	7.735	7.755
Y	22.99	23.49	0.905	0.925
Z	141.99	142.49	5.590	5.610

STYLE 1:
PIN 1. GROUND
2. DC IN
3. RF OUT
4. DC IN
5. DC IN
6. RF IN
7. DC IN
8. GROUND

CASE 389D-01

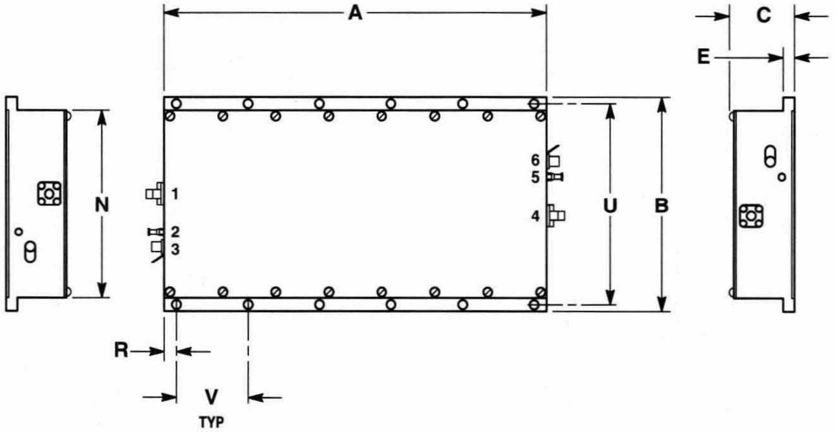

NOTES:
1. DIMENSIONING AND TOLERANCING PER ANSI Y14.5M, 1982.
2. CONTROLLING DIMENSION: INCH.

DIM	MILLIMETERS		INCHES	
	MIN	MAX	MIN	MAX
A	216.92	217.42	8.540	8.560
B	121.67	122.17	4.790	4.810
C	36.58	37.08	1.440	1.460
E	6.10	6.60	0.240	0.260
N	106.43	106.93	4.190	4.210
R	6.74	7.23	0.265	0.285
U	114.05	114.55	4.490	4.510
V	40.39	40.89	1.590	1.610

STYLE 1:
PIN 1. RF IN
2. VDC
3. GROUND
4. RF OUT
5. VDC
6. GROUND

CASE 389E-01

PACKAGE OUTLINE DIMENSIONS AND FOOTPRINTS (continued)

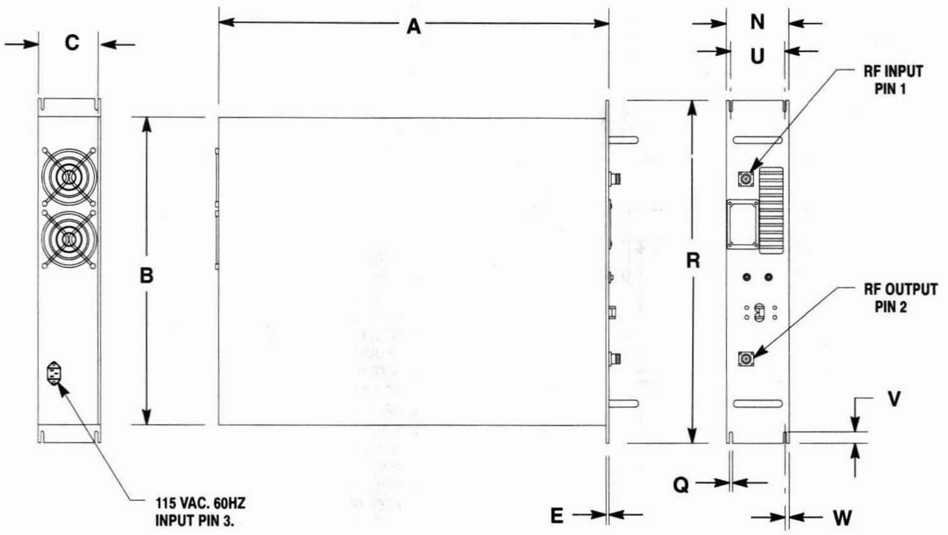

NOTES:
1. DIMENSIONING AND TOLERANCING PER ANSI Y14.5M, 1982.
2. CONTROLLING DIMENSION: INCH.

DIM	MILLIMETERS MIN	MILLIMETERS MAX	INCHES MIN	INCHES MAX
A	461.40	462.15	18.165	18.195
B	431.42	432.18	16.985	17.015
C	86.75	87.50	3.415	3.445
E	2.67	3.42	0.105	0.135
N	87.76	88.51	3.455	3.485
Q	6.23	6.98	0.245	0.275
R	482.22	482.98	18.985	19.015
U	75.82	76.58	2.985	3.015
V	14.86	15.62	0.585	0.615
W	5.47	6.22	0.215	0.245

STYLE 1:
PIN 1. RF INPUT
2. RF OUTPUT
3. AC INPUT

CASE 389F-01

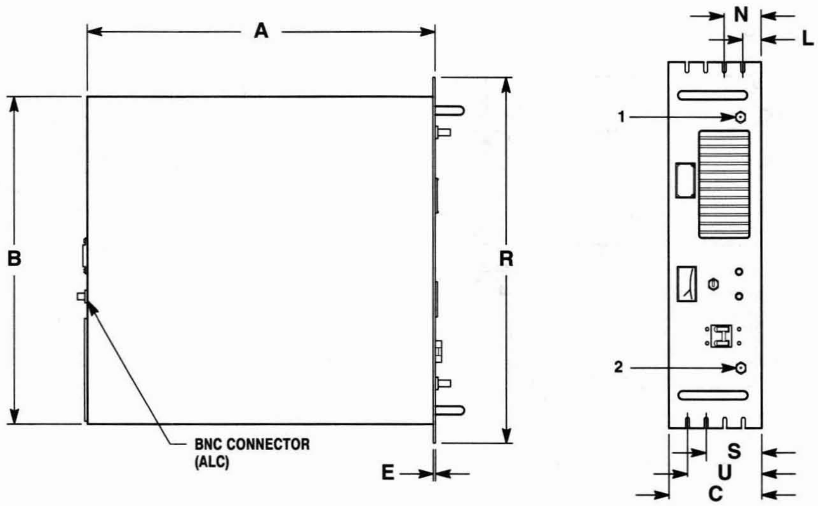

NOTES:
1. DIMENSIONING AND TOLERANCING PER ANSI Y14.5M, 1982.
2. CONTROLLING DIMENSION: INCH.

DIM	MILLIMETERS MIN	MILLIMETERS MAX	INCHES MIN	INCHES MAX
A	521.72	524.76	20.54	20.66
B	549.91	552.45	21.65	21.75
C	220.22	221.48	8.67	8.77
E	2.80	5.33	0.11	0.21
L	36.33	38.86	1.43	1.53
N	80.78	83.31	3.18	3.28
R	608.33	610.87	23.95	24.05
S	137.93	140.46	5.43	5.53
U	182.38	184.91	7.18	7.28

STYLE 1:
PIN 1. RF INPUT
2. RF OUTPUT

CASE 389G-01

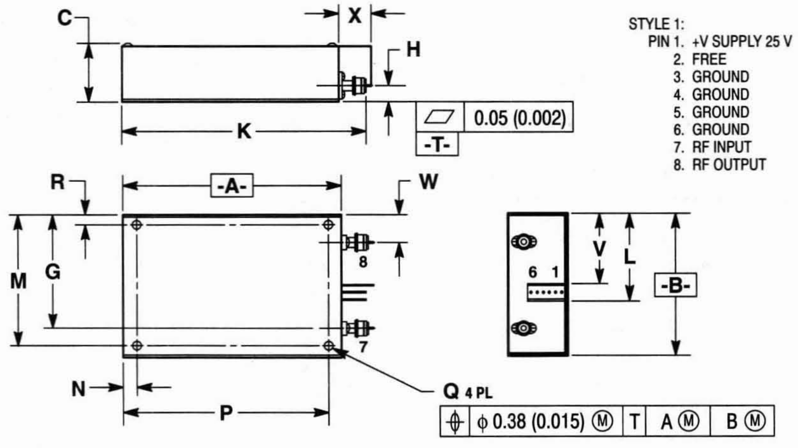

STYLE 1:
PIN 1. +V SUPPLY 25 V
2. FREE
3. GROUND
4. GROUND
5. GROUND
6. GROUND
7. RF INPUT
8. RF OUTPUT

NOTES:
1. DIMENSIONING AND TOLERANCING PER ANSI Y14.5M, 1982.
2. CONTROLLING DIMENSION: MILLIMETERS.
3. 389J-01 OBSOLETE, NEW STANDARD 389J-02.

DIM	MILLIMETERS MIN	MILLIMETERS MAX	INCHES MIN	INCHES MAX
A	133.7	134.2	5.26	5.28
B	—	86.0	—	3.38
C	—	36.2	—	1.42
G	67.9	68.2	2.67	2.68
H	9.1	9.7	0.36	0.38
K	—	146.5	—	5.77
L	53.5	54.3	2.11	2.14
M	79.6 BSC		3.13 BSC	
N	8.5 BSC		0.33 BSC	
P	125.5 BSC		4.94 BSC	
Q	4.4	4.6	0.17	0.18
R	6.2 BSC		0.24 BSC	
V	42.7	43.1	1.68	1.70
W	17.5	17.9	0.69	0.70
X	—	13.5	—	0.53

CASE 389J-02

PACKAGE OUTLINE DIMENSIONS AND FOOTPRINTS (continued)

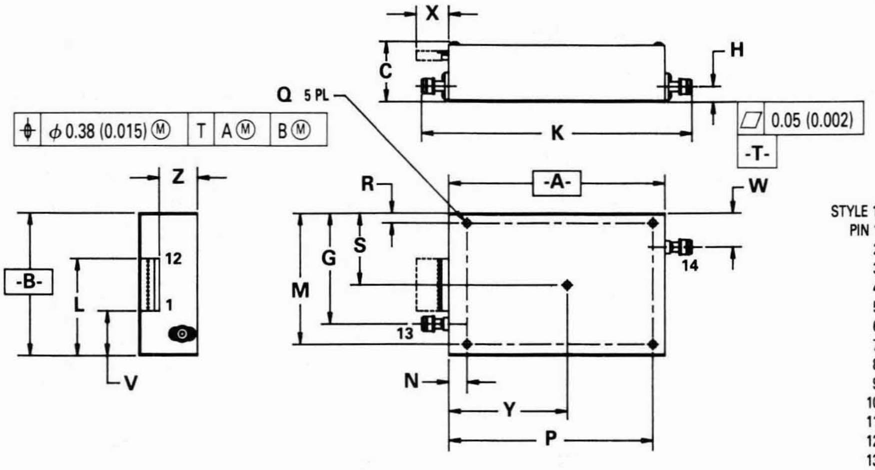

NOTES:
1. DIMENSIONING AND TOLERANCING PER ANSI Y14.5M, 1982.
2. CONTROLLING DIMENSION: MILLIMETERS.

STYLE 1:
PIN 1. $+V_{CC}$ 2
2. $+V_{CC}$ 2
3. $+V_{CC}$ 2
4. GROUND
5. GROUND
6. GROUND
7. GROUND
8. GROUND
9. GROUND
10. $+V_{CC}$ 1
11. $+V_{CC}$ 1
12. $+V_{CC}$ 1
13. RF INPUT
14. RF OUTPUT

	MILLIMETERS		INCHES	
DIM	MIN	MAX	MIN	MAX
A	133.7	134.2	5.26	5.28
B	—	86.0	—	3.38
C	—	36.2	—	1.42
G	66.0	66.6	2.60	2.62
H	9.1	9.7	0.36	0.38
K	—	155.0	—	6.10
L	58.6	59.0	2.30	2.32
M	79.6 BSC		3.13 BSC	
N	20.5 BSC		0.81 BSC	
P	125.5 BSC		4.94 BSC	
Q	4.4	4.6	0.17	0.18
R	6.2 BSC		0.24 BSC	
S	42.9 BSC		1.69 BSC	
V	27.0	27.6	1.06	1.09
W	19.0	19.8	0.75	0.78
X	—	11.0	—	0.43
Y	73.3 BSC		2.88 BSC	
Z	25.8	26.6	1.02	1.05

CASE 389M-01

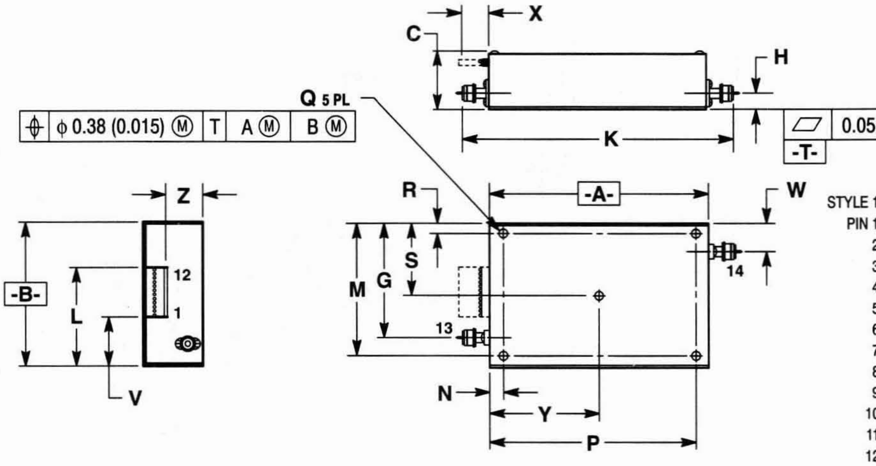

NOTES:
1. DIMENSIONING AND TOLERANCING PER ANSI Y14.5M, 1982.
2. CONTROLLING DIMENSION: MILLIMETERS.

STYLE 1:
PIN 1. $+V_{CC}$ 2
2. $+V_{CC}$ 2
3. $+V_{CC}$ 2
4. GROUND
5. GROUND
6. DETECTION –
7. DETECTION +
8. GROUND
9. GROUND
10. $+V_{CC}$ 1
11. $+V_{CC}$ 1
12. $+V_{CC}$ 1
13. RF INPUT
14. RF OUTPUT

	MILLIMETERS		INCHES	
DIM	MIN	MAX	MIN	MAX
A	133.7	134.2	5.26	5.28
B	—	86.0	—	3.38
C	—	36.2	—	1.42
G	73.0	73.5	2.87	2.89
H	9.1	9.7	0.36	0.38
K	—	155.0	—	6.10
L	58.6	59.0	2.30	2.32
M	79.6 BSC		3.13 BSC	
N	20.5 BSC		0.81 BSC	
P	125.5 BSC		4.94 BSC	
Q	4.4	4.6	0.17	0.18
R	6.2 BSC		0.24 BSC	
S	42.9 BSC		1.69 BSC	
V	27.0	27.6	1.06	1.09
W	12.1	12.5	0.48	0.49
X	—	11.0	—	0.43
Y	62.0 BSC		2.44 BSC	
Z	25.8	26.6	1.02	1.05

CASE 389N-01

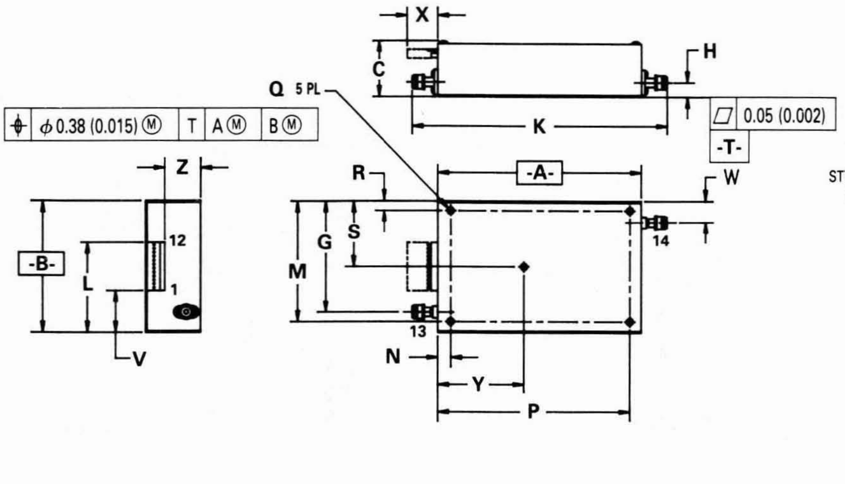

NOTES:
1. DIMENSIONING AND TOLERANCING PER ANSI Y14.5M, 1982.
2. CONTROLLING DIMENSION: MILLIMETERS.

STYLE 1:
PIN 1. $+V_{CC}$ 2
2. $+V_{CC}$ 2
3. $+V_{CC}$ 2
4. GROUND
5. GROUND
6. DETECTION –
7. DETECTION +
8. GROUND
9. GROUND
10. $+V_{CC}$ 1
11. $+V_{CC}$ 1
12. $+V_{CC}$ 1
13. RF INPUT
14. RF OUTPUT

	MILLIMETERS		INCHES	
DIM	MIN	MAX	MIN	MAX
A	133.7	134.2	5.26	5.28
B	—	86.0	—	3.38
C	—	36.2	—	1.42
G	72.2	72.7	2.84	2.86
H	9.1	9.7	0.36	0.38
K	—	155.0	—	6.10
L	58.6	59.0	2.30	2.32
M	79.6 BSC		3.13 BSC	
N	15.5 BSC		0.61 BSC	
P	125.5 BSC		4.94 BSC	
Q	4.4	4.6	0.17	0.18
R	6.2 BSC		0.24 BSC	
S	42.9 BSC		1.69 BSC	
V	27.0	27.6	1.06	1.09
W	13.2	13.6	0.52	0.54
X	—	11.0	—	0.43
Y	56.5 BSC		2.22 BSC	
Z	25.8	26.6	1.02	1.05

CASE 389P-01

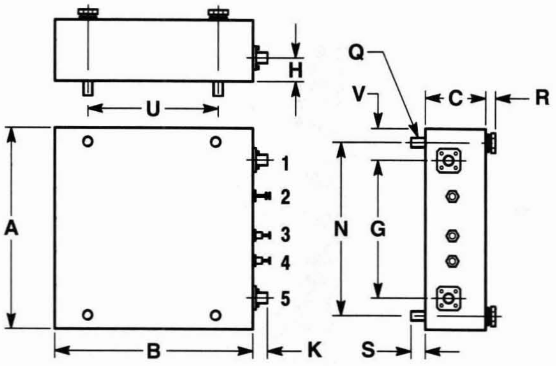

NOTES:
1. DIMENSIONING AND TOLERANCING PER ANSI Y14.5M, 1982.
2. CONTROLLING DIMENSION: INCH.

STYLE 1:
PIN 1. RF IN
2. GROUND
3. V_{CC}
4. DET. OUT
5. RF OUT

DIM	MILLIMETERS		INCHES	
	MIN	MAX	MIN	MAX
A	128.0	131.1	5.04	5.16
B	112.8	115.8	4.44	4.56
C	37.8	40.9	1.49	1.61
G	87.4	90.4	3.44	3.56
H	13.7	16.8	0.54	0.66
K	7.9	10.9	0.31	0.43
N	110.2	113.3	4.34	4.46
R	4.8	7.9	0.19	0.31
S	7.9	10.9	0.31	0.43
U	84.8	87.9	3.34	3.46
V	18.8	21.8	0.74	0.86

CASE 389S-01

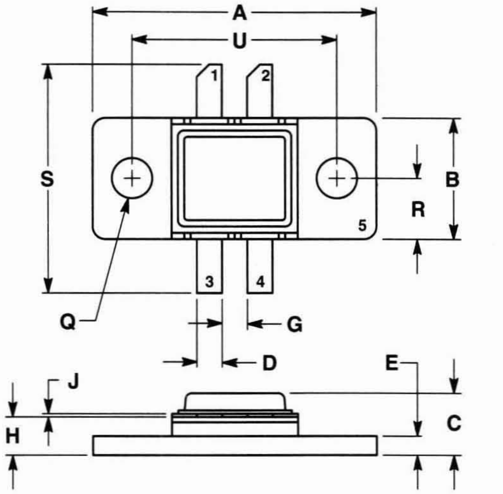

NOTES:
1. DIMENSIONING AND TOLERANCING PER ANSI Y14.5M, 1982.
2. CONTROLLING DIMENSION: INCH.
3. 391-01 OBSOLETE, NEW STANDARD 391-02.

STYLE 1:
PIN 1. COLLECTOR
2. COLLECTOR
3. BASE
4. BASE
5. EMITTER

DIM	MILLIMETERS		INCHES	
	MIN	MAX	MIN	MAX
A	22.73	22.99	0.895	0.905
B	9.98	10.24	0.393	0.403
C	4.37	5.28	0.172	0.208
D	1.91	2.16	0.075	0.085
E	1.39	1.65	0.057	0.063
G	1.91	2.16	0.075	0.085
H	2.79	3.30	0.110	0.130
J	0.08	0.15	0.003	0.006
Q	3.13	3.38	0.123	0.133
R	4.57	5.21	0.180	0.205
S	17.91	18.92	0.705	0.745
U	16.26	16.76	0.640	0.660

CASE 391-02

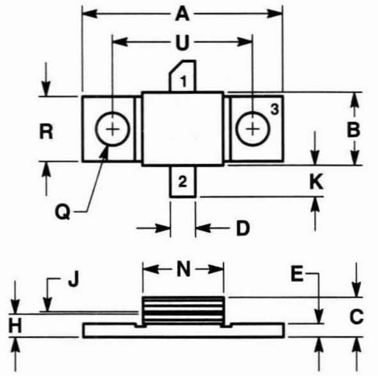

NOTES:
1. DIMENSIONING AND TOLERANCING PER ANSI Y14.5M, 1982.
2. CONTROLLING DIMENSION: INCH.
3. 393-01 OBSOLETE, NEW STANDARD 393-02.

STYLE 1:
PIN 1. COLLECTOR
2. EMITTER
3. BASE

DIM	MILLIMETERS		INCHES	
	MIN	MAX	MIN	MAX
A	20.19	20.45	0.795	0.805
B	7.24	7.49	0.285	0.295
C	3.23	4.62	0.127	0.175
D	2.41	2.67	0.095	0.105
E	1.40	1.65	0.047	0.063
H	2.29	2.84	0.090	0.112
J	0.08	0.12	0.003	0.005
K	3.56	4.06	0.140	0.160
N	8.00	8.26	0.315	0.325
Q	3.18	3.42	0.125	0.135
R	6.48	6.73	0.255	0.265
U	14.03	14.52	0.552	0.572

CASE 393-02

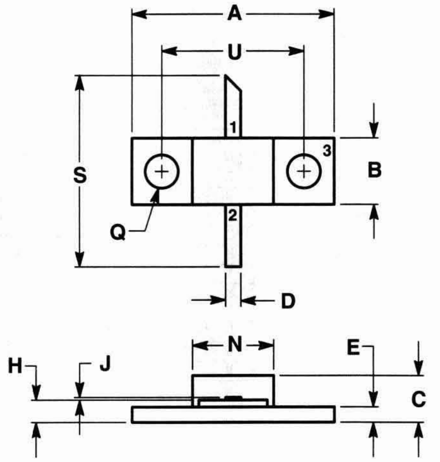

STYLE 1:
PIN 1. COLLECTOR
2. EMITTER
3. BASE

NOTES:
1. DIMENSIONING AND TOLERANCING PER ANSI Y14.5M, 1982.
2. CONTROLLING DIMENSION: INCH.
3. 394-01 OBSOLETE, NEW STANDARD 394-02.

	MILLIMETERS		INCHES	
DIM	MIN	MAX	MIN	MAX
A	20.19	20.45	0.795	0.805
B	6.48	6.73	0.255	0.265
C	3.96	4.47	0.156	0.176
D	1.40	1.65	0.055	0.065
E	1.45	1.60	0.057	0.063
H	1.98	2.34	0.081	0.089
J	0.05	0.10	0.002	0.004
N	8.03	8.28	0.316	0.326
Q	3.18	3.43	0.125	0.135
S	15.75	17.27	0.620	0.680
U	14.02	14.53	0.552	0.572

CASE 394-02

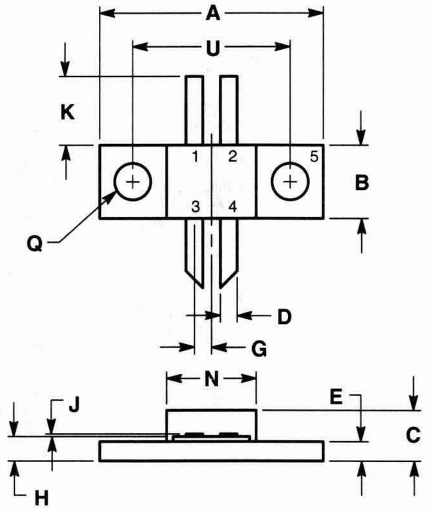

STYLE 1:
PIN 1. BASE
2. BASE
3. COLLECTOR
4. COLLECTOR
5. EMITTER

NOTES:
1. DIMENSIONING AND TOLERANCING PER ANSI Y14.5M, 1982.
2. CONTROLLING DIMENSION: INCH.

	MILLIMETERS		INCHES	
DIM	MIN	MAX	MIN	MAX
A	20.07	20.57	0.790	0.810
B	6.35	6.85	0.250	0.270
C	4.20	5.02	0.165	0.198
D	1.40	1.65	0.055	0.065
E	1.40	1.65	0.055	0.065
G	1.27	1.77	0.060	0.070
H	1.94	2.43	0.076	0.096
J	0.08	0.12	0.003	0.005
K	4.83	5.33	0.190	0.210
N	6.56	6.80	0.258	0.268
Q	3.18	3.42	0.125	0.135
U	14.03	14.52	0.552	0.572

CASE 395-01

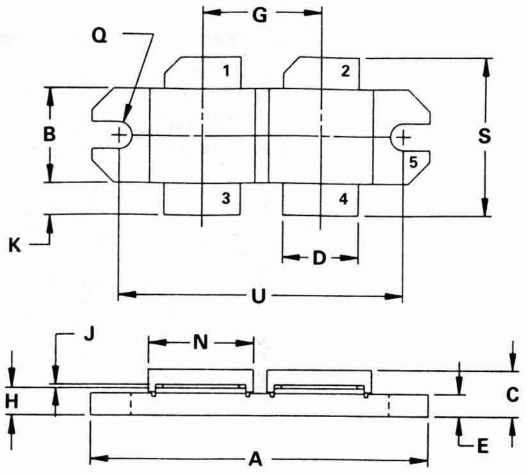

STYLE 1:
PIN 1. COLLECTOR
2. COLLECTOR
3. BASE
4. BASE
5. EMITTER

NOTES:
1. DIMENSIONING AND TOLERANCING PER ANSI Y14.5M, 1982.
2. CONTROLLING DIMENSION: INCH.

	MILLIMETERS		INCHES	
DIM	MIN	MAX	MIN	MAX
A	42.30	42.69	1.665	1.681
B	11.51	11.70	0.453	0.461
C	5.57	5.81	0.219	0.229
D	9.48	9.72	0.373	0.383
E	2.75	2.84	0.108	0.112
G	14.79	15.03	0.582	0.592
H	3.33	3.58	0.131	0.141
J	0.11	0.15	0.004	0.006
K	3.84	4.08	0.151	0.161
N	13.09	13.33	0.515	0.525
Q	3.18	3.42	0.125	0.135
S	19.28	19.53	0.759	0.769
U	35.69	35.89	1.405	1.413

CASE 397-01

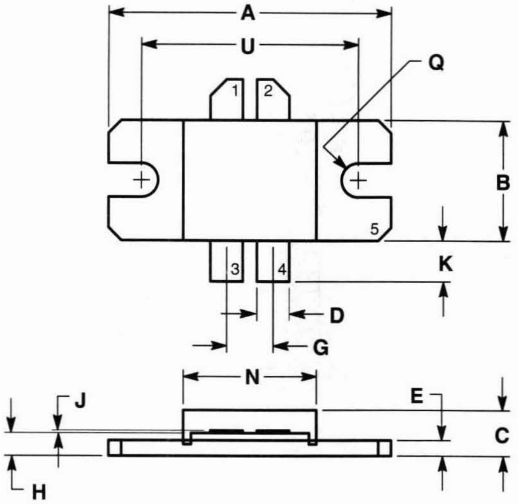

STYLE 1:
PIN 1. COLLECTOR
2. COLLECTOR
3. BASE
4. BASE
5. EMITTER

NOTES:
1. DIMENSIONIONING AND TOLERANCING PER ANSI Y14.5M, 1982.
2. CONTROLLING DIMENSION: INCH.

DIM	MILLIMETERS MIN	MILLIMETERS MAX	INCHES MIN	INCHES MAX
A	27.79	28.19	1.094	1.110
B	11.61	11.81	0.457	0.465
C	4.37	4.62	0.172	0.182
D	3.08	3.32	0.121	0.131
E	1.40	1.65	0.055	0.065
G	4.50	4.69	0.177	0.185
H	2.11	2.36	0.083	0.093
J	0.06	0.10	0.002	0.004
K	3.94	4.03	0.155	0.159
N	13.11	13.30	0.516	0.524
Q	3.18	3.42	0.125	0.135
U	21.37	21.61	0.841	0.851

CASE 398-01

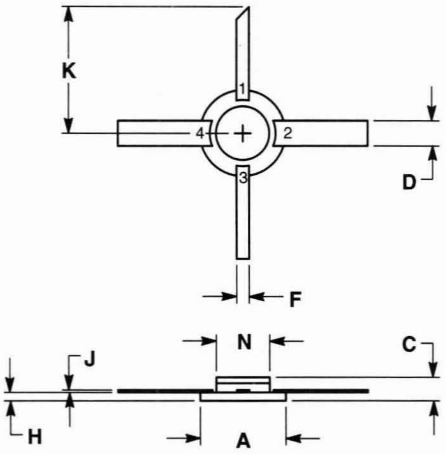

STYLE 1:
PIN 1. COLLECTOR
2. EMITTER
3. BASE
4. EMITTER

NOTES:
1. DIMENSIONING AND TOLERANCING PER ANSI Y14.5M, 1982.
2. CONTROLLING DIMENSION: INCH

DIM	MILLIMETERS MIN	MILLIMETERS MAX	INCHES MIN	INCHES MAX
A	5.16	5.25	0.203	0.207
C	1.25	1.65	0.049	0.065
D	1.40	1.65	0.055	0.065
F	0.64	0.88	0.025	0.035
H	0.44	0.58	0.017	0.023
J	0.06	0.10	0.002	0.004
K	7.12	8.12	0.280	0.320
N	3.13	3.37	0.123	0.133

CASE 400-01

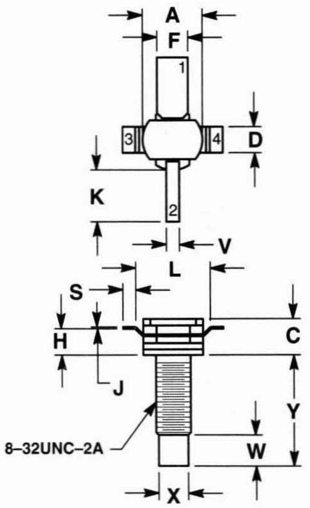

STYLE 1:
PIN 1. BASE
2. COLLECTOR
3. EMITTER
4. EMITTER

NOTES:
1. DIMENSIONING AND TOLERANCING PER ANSI Y14.5M, 1982.
2. CONTROLLING DIMENSION: INCH.

DIM	MILLIMETERS MIN	MILLIMETERS MAX	INCHES MIN	INCHES MAX
A	5.72	6.09	0.225	0.240
C	—	4.44	—	0.175
D	2.42	2.66	0.095	0.105
F	2.93	3.17	0.115	0.125
H	2.93	3.42	0.115	0.135
J	0.08	0.17	0.003	0.007
K	5.08	—	0.200	—
L	7.12	7.62	0.280	0.300
S	1.27	—	0.050	—
V	1.15	1.39	0.045	0.055
W	2.80	3.30	0.110	0.130
X	2.80	3.04	0.110	0.120
Y	10.67	11.68	0.420	0.460

CASE 401-01

PACKAGE OUTLINE DIMENSIONS AND FOOTPRINTS (continued)

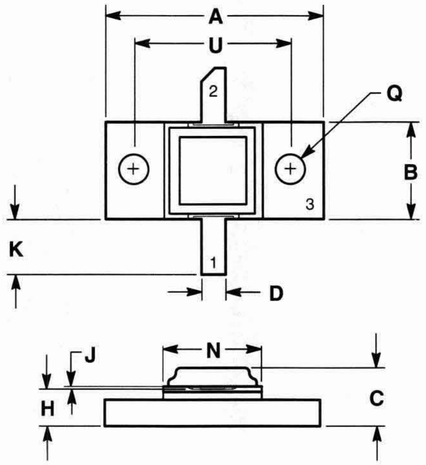

STYLE 1:
PIN 1. EMITTER
2. COLLECTOR
3. BASE

NOTES:
1. DIMENSIONING AND TOLERANCING PER ANSI Y14.5M, 1982
2. CONTROLLING DIMENSION: INCH

DIM	MILLIMETERS		INCHES	
	MIN	MAX	MIN	MAX
A	22.84	23.24	0.885	0.915
B	10.04	10.41	0.395	0.410
C	—	6.24	—	0.246
D	2.42	2.66	0.095	0.105
H	4.07	4.31	0.160	0.170
J	0.08	0.12	0.003	0.005
K	5.59	5.84	0.220	0.230
N	10.04	10.28	0.395	0.405
Q	3.23	3.37	0.127	0.133
U	16.26	16.51	0.640	0.650

CASE 402-01

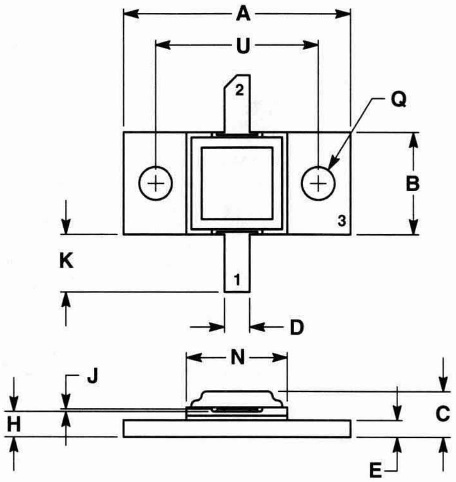

STYLE 1:
PIN 1. BASE
2. COLLECTOR
3. EMITTER

NOTES:
1. DIMENSIONING AND TOLERANCING PER ANSI Y14.5M, 1982.
2. CONTROLLING DIMENSION: INCH.
3. 402A-01 OBSOLETE, NEW STANDARD 402A-02.

DIM	MILLIMETERS		INCHES	
	MIN	MAX	MIN	MAX
A	22.66	23.06	0.892	0.908
B	10.16	10.29	0.400	0.405
C	4.14	5.11	0.163	0.201
D	2.41	2.67	0.095	0.105
E	1.45	1.70	0.059	0.065
H	2.69	3.25	0.106	0.128
J	0.05	0.10	0.002	0.004
K	5.08	6.99	0.200	0.275
N	10.03	10.29	0.395	0.405
Q	3.18	3.43	0.125	0.135
U	16.26	16.76	0.640	0.660

CASE 402A-02

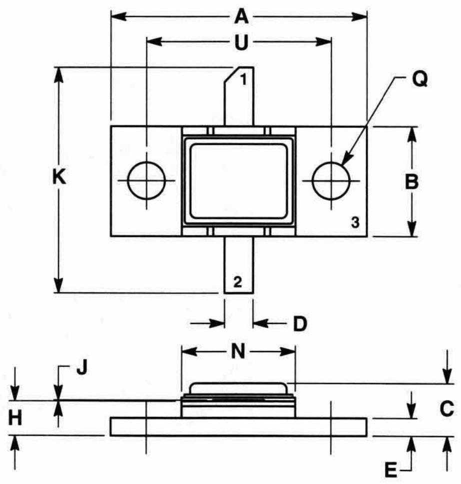

STYLE 1:
PIN 1. COLLECTOR
2. EMITTER
3. BASE

NOTES:
1. DIMENSIONING AND TOLERANCING PER ANSI Y14.5M, 1982.
2. CONTROLLING DIMENSION: INCH.

DIM	MILLIMETERS		INCHES	
	MIN	MAX	MIN	MAX
A	22.66	23.06	0.892	0.908
B	9.65	9.91	0.380	0.390
C	4.27	5.08	0.168	0.200
D	2.41	2.67	0.095	0.105
E	1.52	1.62	0.060	0.064
H	2.79	3.30	0.110	0.130
J	0.08	0.12	0.003	0.005
K	19.56	21.08	0.770	0.830
N	10.03	10.29	0.395	0.405
Q	3.22	3.38	0.127	0.133
U	16.26	16.76	0.640	0.660

CASE 402B-01

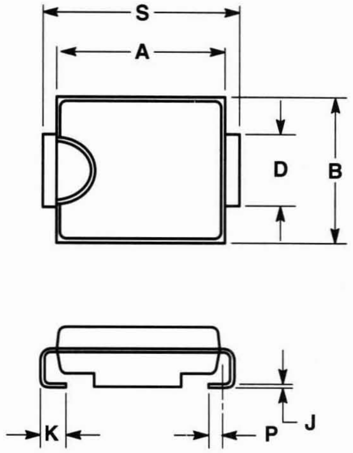

NOTES:
1. DIMENSIONING AND TOLERANCING PER ANSI Y14.5M, 1982.
2. CONTROLLING DIMENSION: INCH.
3. D DIMENSION SHALL BE MEASURED WITHIN DIMENSION P.
4. 403-01 AND -02 OBSOLETE, NEW STANDARD 403-03.

DIM	MILLIMETERS MIN	MILLIMETERS MAX	INCHES MIN	INCHES MAX
A	6.60	7.11	0.260	0.280
B	5.59	6.10	0.220	0.240
C	1.90	2.41	0.075	0.095
D	2.92	3.07	0.115	0.121
H	0.051	0.152	0.0020	0.0060
J	0.15	0.30	0.006	0.012
K	0.76	1.27	0.030	0.050
P	0.51 REF		0.020 REF	
S	7.75	8.13	0.305	0.320

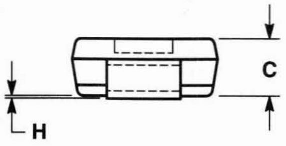

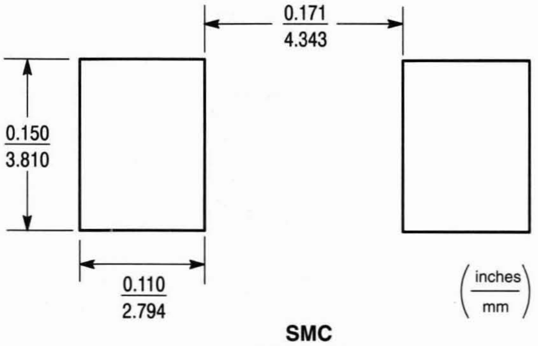

SMC FOOTPRINT

CASE 403-03

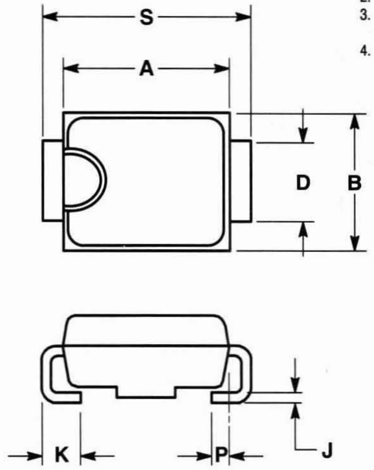

NOTES:
1. DIMENSIONING AND TOLERANCING PER ANSI Y14.5M, 1982.
2. CONTROLLING DIMENSION: INCH.
3. D DIMENSION SHALL BE MEASURED WITHIN DIMENSION P.
4. 403A-01 AND -02 OBSOLETE, NEW STANDARD 403A-03.

DIM	MILLIMETERS MIN	MILLIMETERS MAX	INCHES MIN	INCHES MAX
A	4.06	4.57	0.160	0.180
B	3.30	3.81	0.130	0.150
C	1.90	2.41	0.075	0.095
D	1.96	2.11	0.077	0.083
H	0.051	0.152	0.0020	0.0060
J	0.15	0.30	0.006	0.012
K	0.76	1.27	0.030	0.050
P	0.51 REF		0.020 REF	
S	5.21	5.59	0.205	0.220

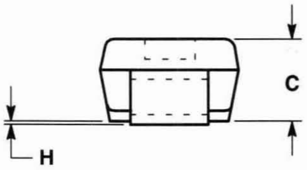

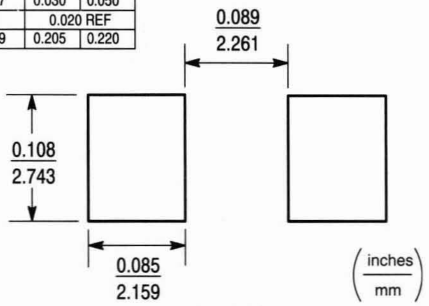

SMB FOOTPRINT

CASE 403A-03

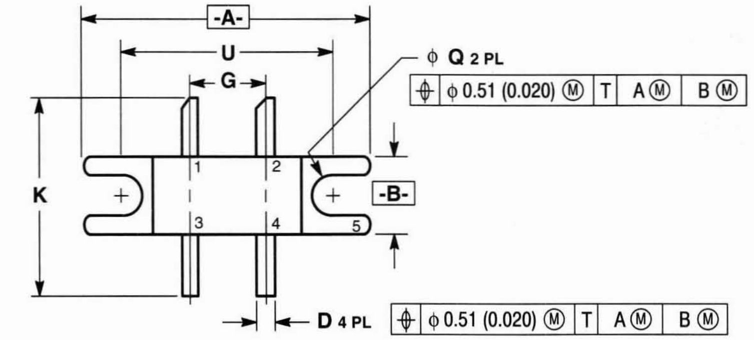

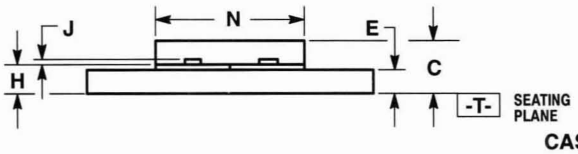

STYLE 1:
PIN 1. DRAIN
2. DRAIN
3. GATE
4. GATE
5. SOURCE

NOTES:
1. DIMENSIONING AND TOLERANCING PER ANSI Y14.5M, 1982.
2. CONTROLLING DIMENSION: INCH.

DIM	MILLIMETERS MIN	MILLIMETERS MAX	INCHES MIN	INCHES MAX
A	24.52	25.01	0.965	0.985
B	6.23	6.73	0.245	0.265
C	4.20	4.69	0.165	0.185
D	1.27	1.77	0.050	0.070
E	1.78	2.03	0.070	0.080
G	6.45 BSC		0.254 BSC	
H	2.42	2.66	0.095	0.105
J	0.08	0.15	0.003	0.006
K	15.88	17.14	0.625	0.675
N	12.58	13.20	0.495	0.520
Q	3.05	3.55	0.120	0.140
U	18.42 BSC		0.725 BSC	

CASE 412-01

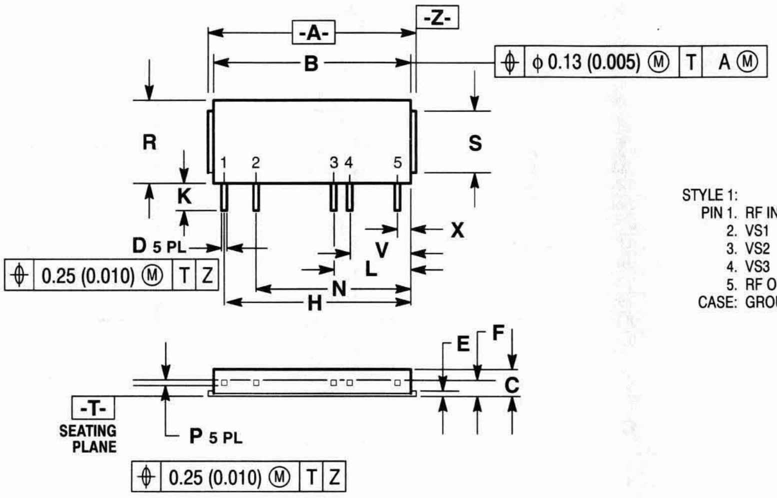

STYLE 1:
PIN 1. RF INPUT/V CONT
2. VS1
3. VS2
4. VS3
5. RF OUTPUT
CASE: GROUND

NOTES:
1. DIMENSIONING AND TOLERANCING PER ANSI Y14.5M, 1982.
2. CONTROLLING DIMENSION: INCH.
3. DIMENSION F TO CENTER OF LEADS.
4. 413-01 OBSOLETE, REPLACED BY NEW STANDARD 413-02.

DIM	MILLIMETERS MIN	MILLIMETERS MAX	INCHES MIN	INCHES MAX
A	32.77	33.14	1.290	1.305
B	32.01	32.38	1.260	1.275
C	4.45	4.57	0.175	0.180
D	0.46	0.55	0.018	0.022
E	1.02	1.14	0.040	0.045
F	1.96	2.41	0.077	0.095
H	30.61 BSC		1.205 BSC	
K	2.54	—	0.100	—
L	12.83 BSC		0.505 BSC	
N	25.53 BSC		1.005 BSC	
P	0.21	0.30	0.008	0.012
R	13.85	14.22	0.545	0.560
S	9.53	9.90	0.375	0.390
V	10.29 BSC		0.405 BSC	
X	2.67 BSC		0.105 BSC	

CASE 413-02

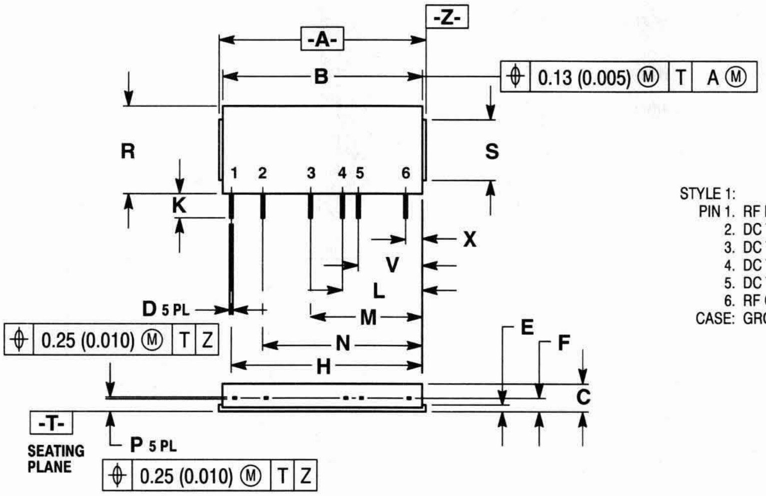

STYLE 1:
PIN 1. RF INPUT/V CONT
2. DC TERMINAL, VS1
3. DC TERMINAL, VB
4. DC TERMINAL, VS2
5. DC TERMINAL, VS3
6. RF OUTPUT
CASE: GROUND

NOTES:
1. DIMENSIONING AND TOLERANCING PER ANSI Y14.5M, 1982.
2. CONTROLLING DIMENSION: INCH.
3. DIMENSION F TO CENTER OF LEADS.

DIM	MILLIMETERS MIN	MILLIMETERS MAX	INCHES MIN	INCHES MAX
A	32.77	33.14	1.290	1.305
B	32.01	32.38	1.260	1.275
C	4.45	4.57	0.175	0.180
D	0.46	0.55	0.018	0.022
E	1.02	1.14	0.040	0.045
F	1.96	2.41	0.077	0.095
H	30.61 BSC		1.205 BSC	
K	2.54	—	0.100	—
L	12.83 BSC		0.505 BSC	
M	17.91 BSC		0.705 BSC	
N	25.53 BSC		1.005 BSC	
P	0.21	0.30	0.008	0.012
R	13.85	14.22	0.545	0.560
S	9.53	9.90	0.375	0.390
V	10.29 BSC		0.405 BSC	
X	2.67 BSC		0.105 BSC	

CASE 413A-01

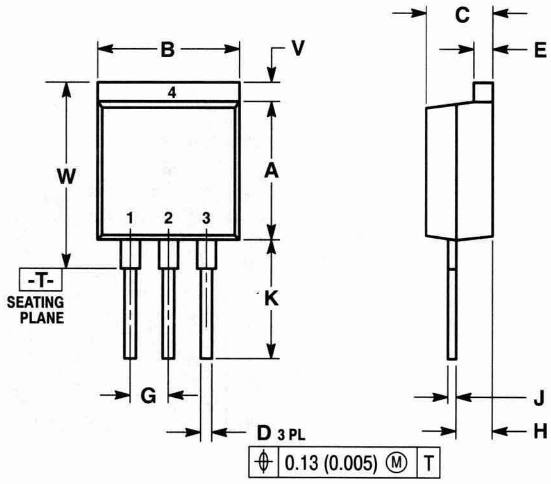

STYLE 2:
PIN 1. GATE
2. DRAIN
3. SOURCE
4. DRAIN

NOTES:
1. DIMENSIONING AND TOLERANCING PER ANSI Y14.5M, 1982.
2. CONTROLLING DIMENSION: INCH.

DIM	MILLIMETERS MIN	MILLIMETERS MAX	INCHES MIN	INCHES MAX
A	8.64	9.65	0.340	0.380
B	9.65	10.29	0.380	0.405
C	4.06	4.83	0.160	0.190
D	0.51	0.89	0.020	0.035
E	1.14	1.40	0.045	0.055
G	2.54 BSC		0.100 BSC	
H	2.03	2.79	0.080	0.110
J	0.46	0.64	0.018	0.025
K	7.11	9.14	0.280	0.360
V	1.14	1.40	0.045	0.055
W	11.81	12.57	0.465	0.495

CASE 418-01

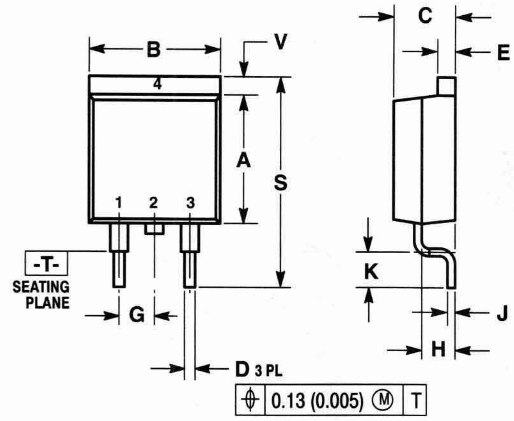

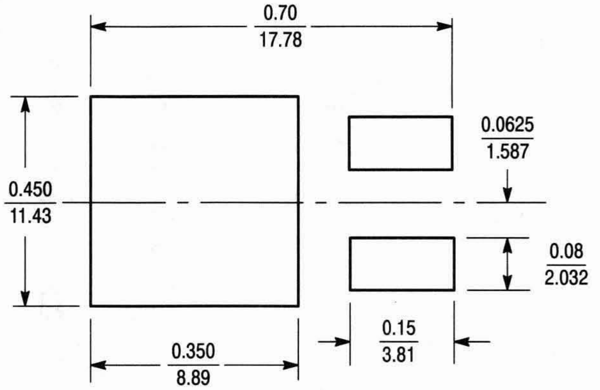

D^2PAK FOOTPRINT

(inches / mm)

STYLE 2:
PIN 1. GATE
2. DRAIN
3. SOURCE
4. DRAIN

NOTES:
1. DIMENSIONING AND TOLERANCING PER ANSI Y14.5M, 1982.
2. CONTROLLING DIMENSION: INCH.

DIM	MILLIMETERS		INCHES	
	MIN	MAX	MIN	MAX
A	8.64	9.65	0.340	0.380
B	9.65	10.29	0.380	0.405
C	4.06	4.83	0.160	0.190
D	0.51	0.89	0.020	0.035
E	1.14	1.40	0.045	0.055
G	2.54 BSC		0.100 BSC	
H	2.03	2.79	0.080	0.110
J	0.46	0.64	0.018	0.025
K	2.29	2.79	0.090	0.110
S	14.60	15.88	0.575	0.625
V	1.14	1.40	0.045	0.055

CASE 418B-01

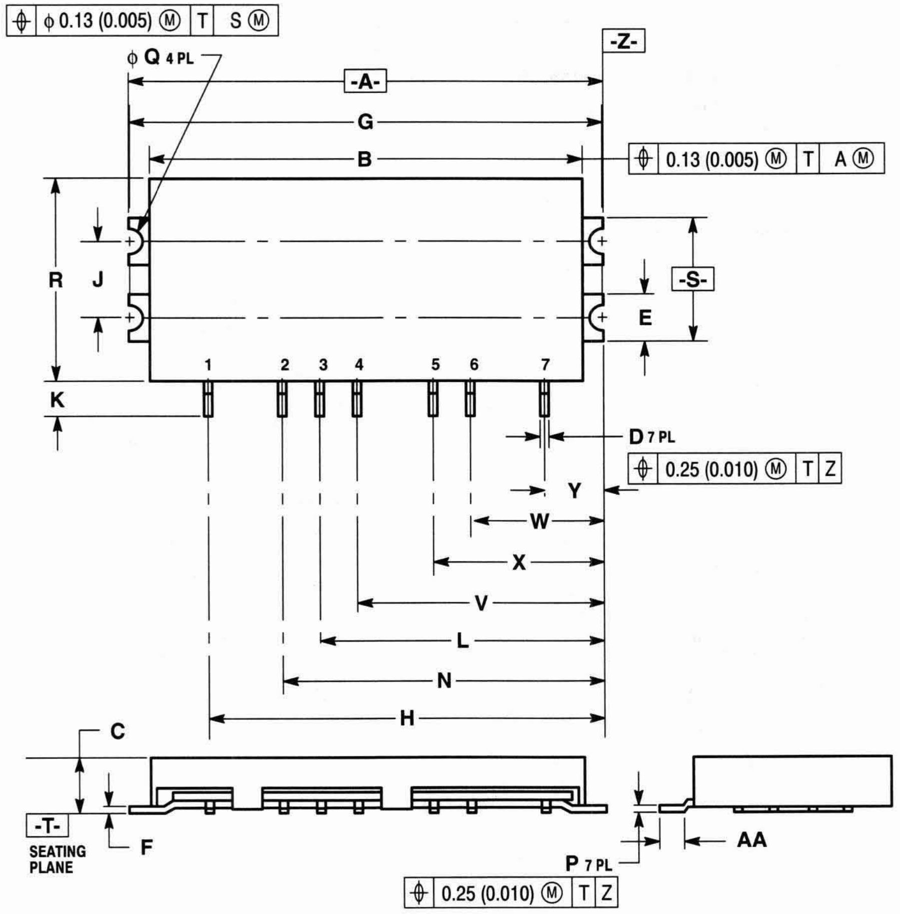

CASE 420-01

NOTES:
1. DIMENSIONING AND TOLERANCING PER ANSI Y14.5M, 1982.
2. CONTROLLING DIMENSION: MILLIMETER.

DIM	MILLIMETERS		INCHES	
	MIN	MAX	MIN	MAX
A	31.74	32.00	1.250	1.260
B	28.80	29.20	1.134	1.150
C	3.64	4.00	0.143	0.157
D	0.46	0.55	0.018	0.022
E	2.80	3.20	0.110	0.126
F	0.17	0.43	0.007	0.017
G	31.50 BSC		1.240 BSC	
H	26.50 BSC		1.043 BSC	
J	5.00 BSC		0.197 BSC	
K	2.20	2.48	0.087	0.097
L	19.00 BSC		0.748 BSC	
N	21.50 BSC		0.846 BSC	
P	0.21	0.30	0.008	0.012
Q	1.37	1.63	0.054	0.064
R	13.17	13.43	0.519	0.529
S	7.80	8.20	0.307	0.323
V	16.50 BSC		0.650 BSC	
W	9.00 BSC		0.354 BSC	
X	11.50 BSC		0.453 BSC	
Y	4.00 BSC		0.157 BSC	
AA	1.37	1.63	0.054	0.064

STYLE 1:
PIN 1. P IN
2. VDD1
3. VGG2
4. VDD2
5. VGG3
6. VDD3
7. P OUT

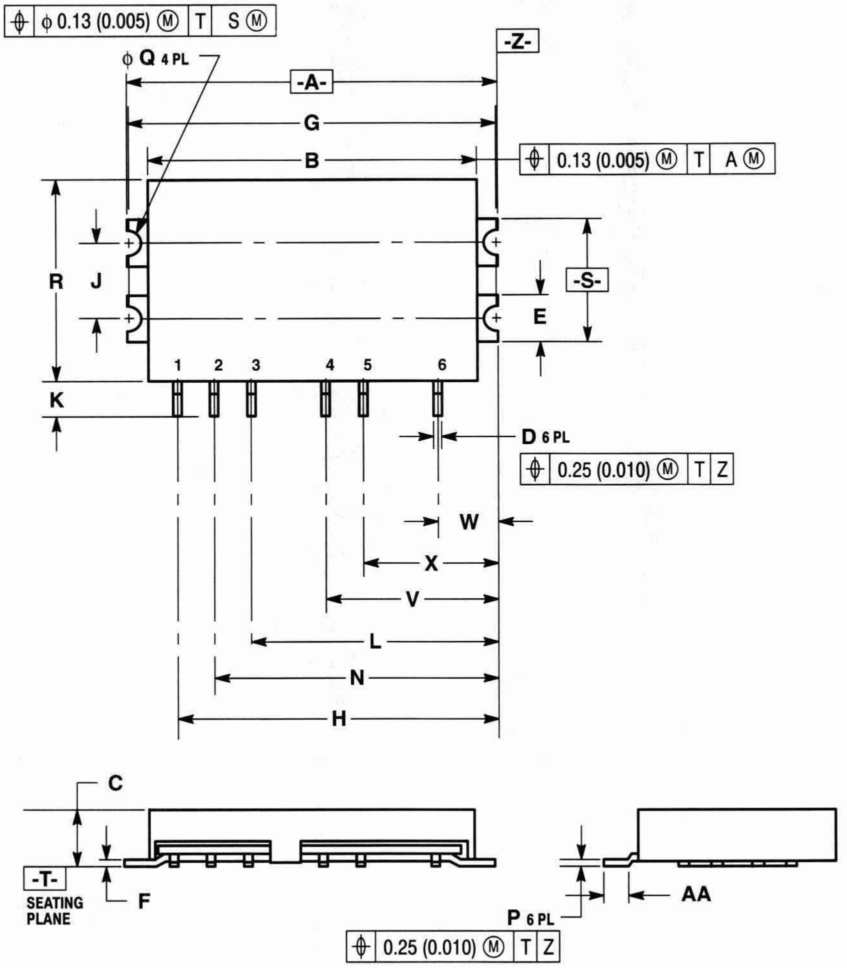

NOTES:
1. DIMENSIONING AND TOLERANCING PER ANSI Y14.5M, 1982.
2. CONTROLLING DIMENSION: MILLIMETER.

DIM	MILLIMETERS MIN	MILLIMETERS MAX	INCHES MIN	INCHES MAX
A	24.74	25.00	0.974	0.984
B	21.80	22.20	0.858	0.874
C	3.64	4.00	0.143	0.157
D	0.46	0.55	0.018	0.022
E	2.80	3.20	0.110	0.126
F	0.17	0.43	0.007	0.017
G	24.50 BSC		0.965 BSC	
H	21.50 BSC		0.846 BSC	
J	5.00 BSC		0.197 BSC	
K	2.20	2.48	0.087	0.097
L	16.50 BSC		0.650 BSC	
N	19.00 BSC		0.748 BSC	
P	0.21	0.30	0.008	0.12
Q	1.37	1.63	0.054	0.064
R	13.17	13.43	0.519	0.529
S	7.80	8.20	0.307	0.323
V	11.50 BSC		0.453 BSC	
W	4.00 BSC		0.157 BSC	
X	9.00 BSC		0.354 BSC	
AA	1.37	1.63	0.054	0.064

STYLE 1:
PIN 1. P IN
2. VGG1
3. VDD1
4. VGG2
5. VDD2
6. P OUT

CASE 420A-01

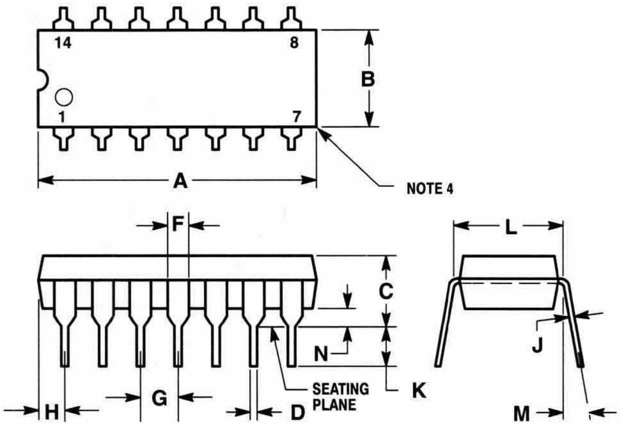

STYLE 1:
PIN 1. COLLECTOR
2. BASE
3. EMITTER
4. NO CONNECTION
5. EMITTER
6. BASE
7. COLLECTOR
8. COLLECTOR
9. BASE
10. EMITTER
11. NO CONNECTION
12. EMITTER
13. BASE
14. COLLECTOR

STYLE 5:
PIN 1. GATE
2. DRAIN
3. SOURCE
4. NO CONNECTION
5. SOURCE
6. DRAIN
7. GATE
8. GATE
9. DRAIN
10. SOURCE
11. NO CONNECTION
12. SOURCE
13. DRAIN
14. GATE

NOTES:
1. LEADS WITHIN 0.13 mm (0.005) RADIUS OF TRUE POSITION AT SEATING PLANE AT MAXIMUM MATERIAL CONDITION.
2. DIMENSION "L" TO CENTER OF LEADS WHEN FORMED PARALLEL.
3. DIMENSION "B" DOES NOT INCLUDE MOLD FLASH.
4. ROUNDED CORNERS OPTIONAL.
5. 646-05 OBSOLETE, NEW STANDARD 646-06.

DIM	MILLIMETERS MIN	MILLIMETERS MAX	INCHES MIN	INCHES MAX
A	18.16	19.56	0.715	0.770
B	6.10	6.60	0.240	0.260
C	3.69	4.69	0.145	0.185
D	0.38	0.53	0.015	0.021
F	1.02	1.78	0.040	0.070
G	2.54 BSC		0.100 BSC	
H	1.32	2.41	0.052	0.095
J	0.20	0.38	0.008	0.015
K	2.92	3.43	0.115	0.135
L	7.62 BSC		0.300 BSC	
M	0°	10°	0°	10°
N	0.39	1.01	0.015	0.039

CASE 646-06

PACKAGE OUTLINE DIMENSIONS AND FOOTPRINTS (continued)

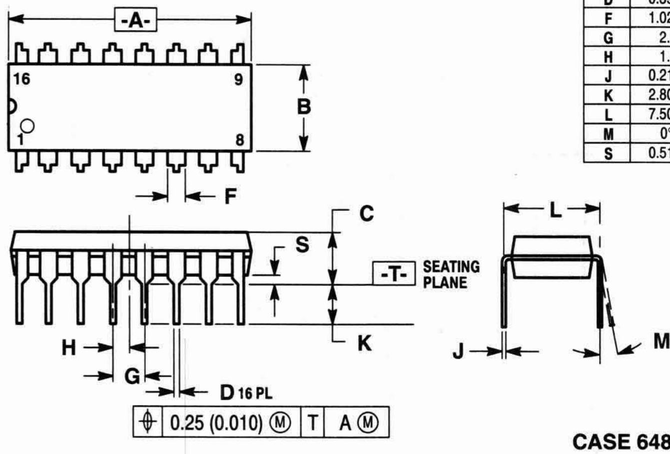

	MILLIMETERS		INCHES	
DIM	MIN	MAX	MIN	MAX
A	18.80	19.55	0.740	0.770
B	6.35	6.85	0.250	0.270
C	3.69	4.44	0.145	0.175
D	0.39	0.53	0.015	0.021
F	1.02	1.77	0.040	0.070
G	2.54 BSC		0.100 BSC	
H	1.27 BSC		0.050 BSC	
J	0.21	0.38	0.008	0.015
K	2.80	3.30	0.110	0.130
L	7.50	7.74	0.295	0.305
M	0°	10°	0°	10°
S	0.51	1.01	0.020	0.040

NOTES:
1. DIMENSIONING AND TOLERANCING PER ANSI Y14.5M, 1982.
2. CONTROLLING DIMENSION: INCH.
3. DIMENSION "L" TO CENTER OF LEADS WHEN FORMED PARALLEL.
4. DIMENSION "B" DOES NOT INCLUDE MOLD FLASH.
5. ROUNDED CORNERS OPTIONAL.
6. 648-01 THRU -07 OBSOLETE, NEW STANDARD 648-08.

STYLE 1:
PIN 1. CATHODE
2. CATHODE
3. CATHODE
4. CATHODE
5. CATHODE
6. CATHODE
7. CATHODE
8. CATHODE
9. ANODE
10. ANODE
11. ANODE
12. ANODE
13. ANODE
14. ANODE
15. ANODE
16. ANODE

STYLE 2:
PIN 1. COMMON DRAIN
2. COMMON DRAIN
3. COMMON DRAIN
4. COMMON DRAIN
5. COMMON DRAIN
6. COMMON DRAIN
7. COMMON DRAIN
8. COMMON DRAIN
9. GATE
10. SOURCE
11. GATE
12. SOURCE
13. GATE
14. SOURCE
15. GATE
16. SOURCE

CASE 648-08

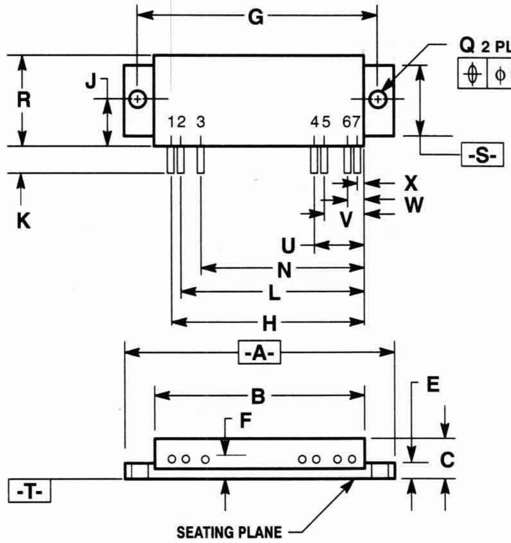

NOTES:
1. CONTROLLING DIM: INCH.
2. DIMENSIONING AND TOLERANCING PER ANSI Y14.5M, 1982.
3. 700-03 OBSOLETE, REPLACED BY NEW STANDARD 700-04.

STYLE 1:
PIN 1. RF OUTPUT
2. GROUND
3. D.C. TERMINAL
4. GROUND
5. D.C. GAIN
6. GROUND
7. RF INPUT

	MILLIMETERS		INCHES	
DIM	MIN	MAX	MIN	MAX
A	67.06	67.56	2.640	2.660
B	51.82	52.95	2.040	2.085
C	8.51	9.14	0.335	0.360
E	2.54	2.92	0.100	0.115
F	2.16	2.92	0.085	0.115
G	61.09 BSC		2.405 BSC	
H	47.88	48.64	1.885	1.915
J	10.16	11.18	0.400	0.440
K	5.85	7.62	0.230	0.300
L	45.34	46.10	1.785	1.815
N	40.26	41.02	1.585	1.615
Q	3.46	3.70	0.136	0.146
R	20.32	20.82	0.800	0.820
S	17.02	17.52	0.670	0.690
U	12.32	13.08	0.485	0.515
V	9.78	10.54	0.385	0.415
W	4.70	5.46	0.185	0.215
X	2.16	2.92	0.085	0.115

CASE 700-04

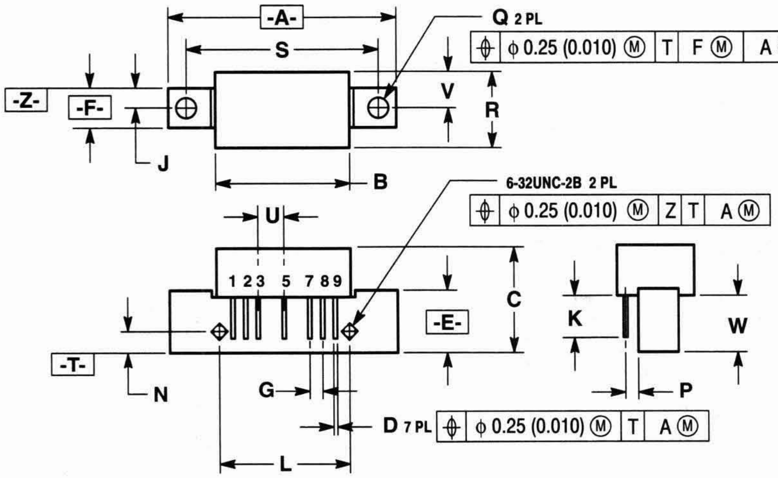

NOTES:
1. DIMENSIONING AND TOLERANCING PER ANSI Y14.5M, 1982.
2. CONTROLLING DIMENSION: INCH.

STYLE 1:
PIN 1. RF INPUT
2. GROUND
3. GROUND
4. DELETED
5. VDC
6. DELETED
7. GROUND
8. GROUND
9. RF OUTPUT

	MILLIMETERS		INCHES	
DIM	MIN	MAX	MIN	MAX
A	—	45.08	—	1.775
B	26.42	26.92	1.040	1.060
C	20.57	21.34	0.810	0.840
D	0.46	0.56	0.018	0.022
E	11.81	12.95	0.465	0.510
F	7.62	8.25	0.300	0.325
G	2.54 BSC		0.100 BSC	
J	3.96 BSC		0.156 BSC	
K	8.00	8.50	0.315	0.355
L	25.40 BSC		1.00 BSC	
N	4.19 BSC		0.165 BSC	
P	2.54 BSC		0.100 BSC	
Q	3.76	4.27	0.148	0.168
R	—	15.11	—	0.595
S	38.10 BSC		1.500 BSC	
U	5.08 BSC		0.200 BSC	
V	7.11 BSC		0.280 BSC	
W	11.05	11.43	0.435	0.450

CASE 714-04

PACKAGE OUTLINE DIMENSIONS AND FOOTPRINTS (continued)

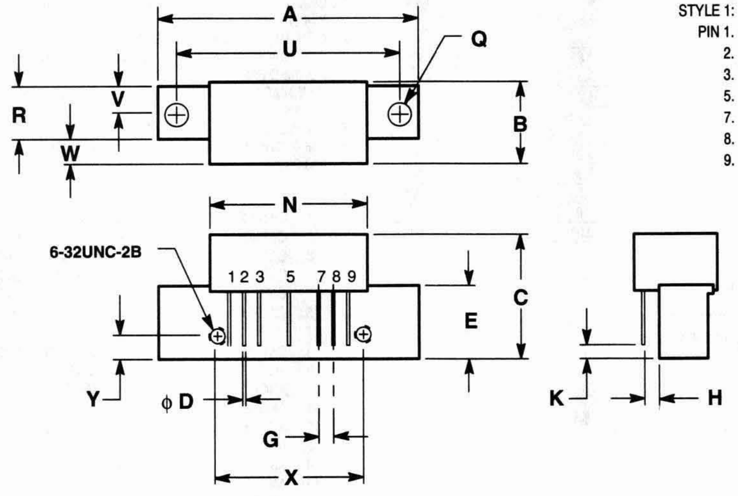

STYLE 1:
PIN 1. RF INPUT
2. GROUND
3. GROUND
5. + V_{CC}
7. GROUND
8. GROUND
9. RF OUTPUT

NOTES:
1. DIMENSIONING AND TOLERANCING PER ANSI Y14.5M, 1982.
2. CONTROLLING DIMENSION: INCH.

DIM	MILLIMETERS		INCHES	
	MIN	MAX	MIN	MAX
A	44.33	44.57	1.745	1.775
B	—	14.85	—	0.585
C	—	22.09	—	0.870
D	0.49	0.55	0.019	0.022
E	12.45	12.95	0.490	0.510
G	2.42	2.66	0.095	0.105
H	2.42	2.66	0.095	0.105
K	1.78	2.79	0.070	0.110
N	26.80	27.55	1.055	1.085
Q	3.76	5.33	0.148	0.210
R	7.75	8.25	0.305	0.325
U	37.85	38.35	1.490	1.510
V	3.87	4.14	0.152	0.163
W	4.20	4.44	0.165	0.175
X	25.15	25.65	0.990	1.010
Y	4.07	4.31	0.160	0.170

CASE 714F-01

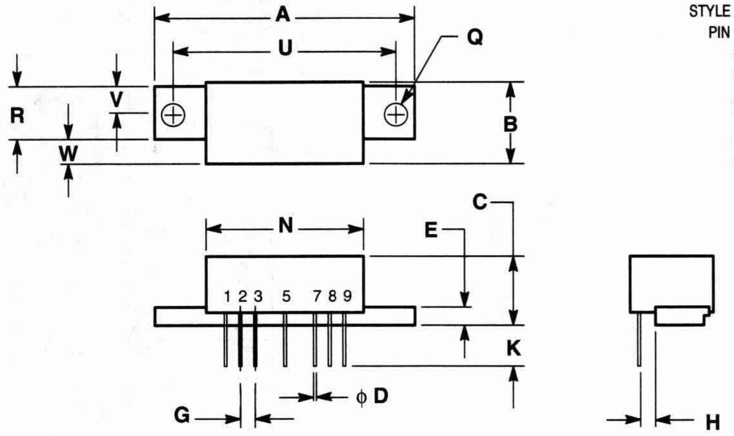

STYLE 1:
PIN 1. RF INPUT
2. GROUND
3. GROUND
5. + V_{CC}
7. GROUND
8. GROUND
9. RF OUTPUT

NOTES:
1. DIMENSIONING AND TOLERANCING PER ANSI Y14.5M, 1982.
2. CONTROLLING DIMENSION: INCH.

DIM	MILLIMETERS		INCHES	
	MIN	MAX	MIN	MAX
A	44.33	44.57	1.745	1.755
B	13.97	14.47	0.550	0.570
C	10.93	11.93	0.430	0.470
D	0.44	0.50	0.017	0.020
E	3.05	3.30	0.205	0.130
G	2.42	2.66	0.095	0.105
H	2.42	2.66	0.095	0.105
K	6.48	7.74	0.225	0.305
N	26.67	27.17	1.050	1.060
Q	3.81	4.06	0.150	0.160
R	7.88	8.12	0.310	0.320
U	37.85	38.35	1.490	1.510
V	3.94	4.06	0.155	0.160
W	4.07	4.57	0.160	0.180

CASE 714G–01

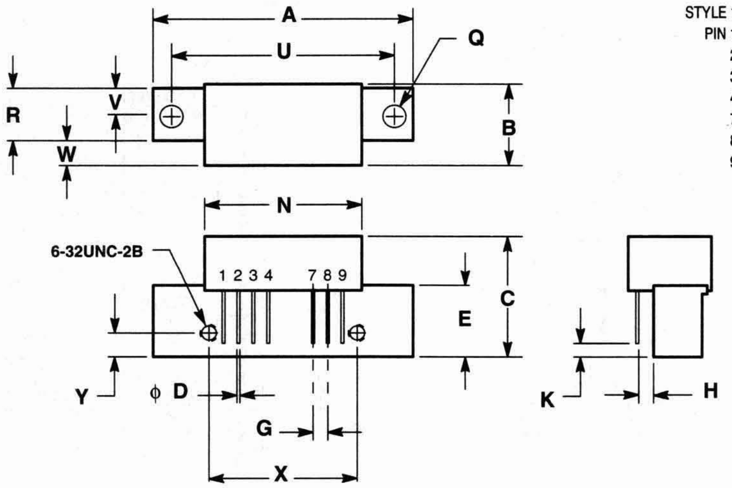

STYLE 1:
PIN 1. RF INPUT
2. GROUND
3. GROUND
4. $-V_{CC}$
7. GROUND
8. GROUND
9. RF OUTPUT

NOTES:
1. DIMENSIONING AND TOLERANCING PER ANSI Y14.5M, 1982.
2. CONTROLLING DIMENSION: INCH.

DIM	MILLIMETERS		INCHES	
	MIN	MAX	MIN	MAX
A	44.33	44.57	1.745	1.755
B	—	14.85	—	0.585
C	—	22.09	—	0.870
D	0.49	0.55	0.019	0.022
E	12.45	12.95	0.490	0.510
G	2.42	2.66	0.095	0.105
H	2.42	2.66	0.095	0.105
K	1.78	2.79	0.070	0.110
N	26.80	27.55	1.055	1.085
Q	3.76	5.33	0.148	0.210
R	7.75	8.25	0.305	0.325
U	37.85	38.35	1.490	1.510
V	3.87	4.14	0.152	0.163
W	4.20	4.44	0.165	0.175
X	25.15	25.65	0.990	1.010
Y	4.07	4.31	0.160	0.170

CASE 714H-01

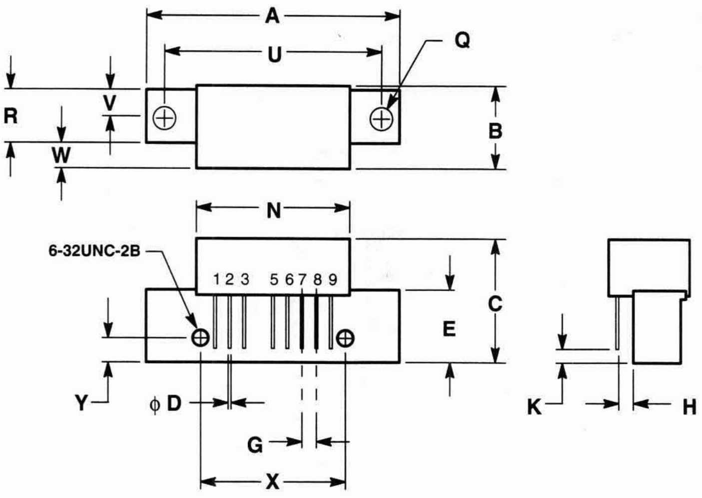

STYLE 1:
PIN 1. RF INPUT
2. GROUND
3. GROUND
5. V_{CC} 1
6. V_{CC} 2
7. GROUND
8. GROUND
9. RF OUTPUT

STYLE 2:
PIN 1. RF INPUT
2. GROUND
3. GROUND
5. V_{CC} 1
6. V_{CC} 2
7. GROUND
8. GROUND
9. RF OUTPUT, V_{CC} 3

NOTES:
1. DIMENSIONING AND TOLERANCING PER ANSI Y14.5M, 1982.
2. CONTROLLING DIMENSION: INCH.

DIM	MILLIMETERS MIN	MILLIMETERS MAX	INCHES MIN	INCHES MAX
A	44.33	44.57	1.745	1.755
B	—	14.85	—	0.585
C	—	22.09	—	0.870
D	0.49	0.55	0.019	0.022
E	12.45	12.95	0.490	0.510
G	2.42	2.66	0.095	0.105
H	2.42	2.66	0.095	0.105
K	1.78	2.79	0.070	0.110
N	26.80	27.55	1.055	1.085
Q	3.76	5.33	0.148	0.210
R	7.75	8.25	0.305	0.325
U	37.85	38.35	1.490	1.510
V	3.87	4.14	0.152	0.163
W	4.20	4.44	0.165	0.175
X	25.15	25.65	0.990	1.010
Y	4.07	4.31	0.160	0.170

CASE 714M-01

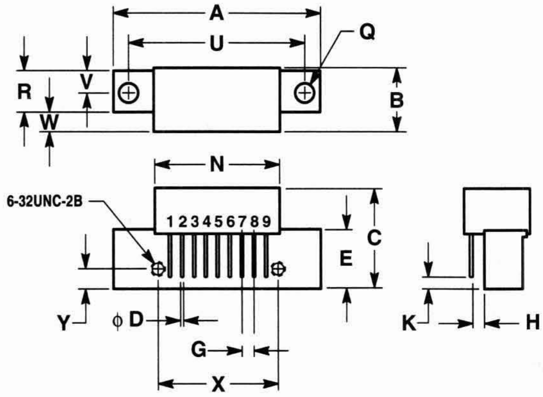

STYLE 2:
PIN 1. RF INPUT
2. GROUND
3. GROUND
4. RESISTOR-GROUND
5. GROUND
6. GROUND
7. GROUND
8. V_{CC} 1
9. RF OUTPUT

STYLE 3:
PIN 1. RF INPUT
2. GROUND
3. GROUND
4. V_{CC} 1
5. GROUND
6. GROUND
7. GROUND
8. V_{CC} 2
9. RF OUTPUT

NOTES:
1. DIMENSIONING AND TOLERANCING PER ANSI Y14.5M, 1982
2. CONTROLLING DIMENSION: INCH.

DIM	MILLIMETERS MIN	MILLIMETERS MAX	INCHES MIN	INCHES MAX
A	44.33	44.57	1.745	1.755
B	—	14.85	—	0.585
C	—	22.09	—	0.870
D	0.49	0.55	0.019	0.022
E	12.45	12.95	0.490	0.510
G	2.42	2.66	0.095	0.105
H	2.42	2.66	0.095	0.105
K	1.78	2.79	0.070	0.110
N	26.80	27.55	1.055	1.085
Q	3.76	5.33	0.148	0.210
R	7.75	8.25	0.305	0.325
U	37.85	38.35	1.490	1.510
V	3.87	4.14	0.152	0.163
W	4.20	4.44	0.165	0.175
X	25.15	25.65	0.990	1.010
Y	4.07	4.31	0.160	0.170

CASE 714P-01

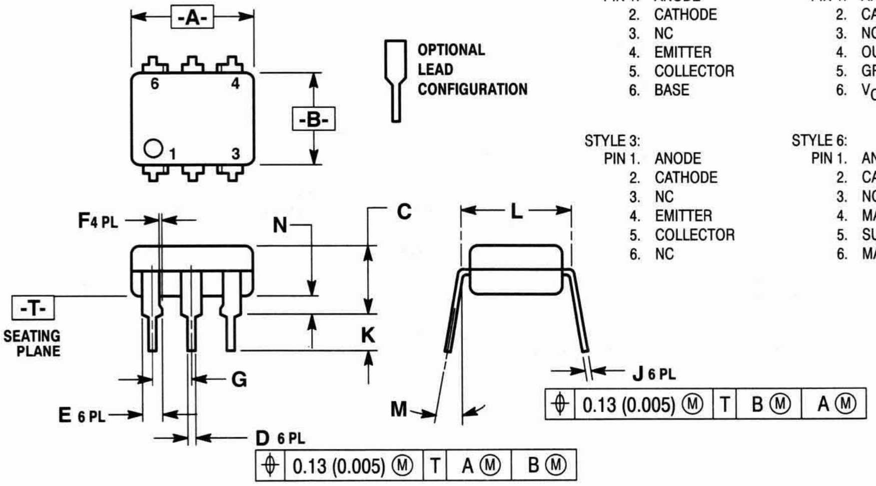

STYLE 1:
PIN 1. ANODE
2. CATHODE
3. NC
4. EMITTER
5. COLLECTOR
6. BASE

STYLE 3:
PIN 1. ANODE
2. CATHODE
3. NC
4. EMITTER
5. COLLECTOR
6. NC

STYLE 5:
PIN 1. ANODE
2. CATHODE
3. NC
4. OUTPUT
5. GROUND
6. V_{CC}

STYLE 6:
PIN 1. ANODE
2. CATHODE
3. NC
4. MAIN TERMINAL
5. SUBSTRATE
6. MAIN TERMINAL

STYLE 8:
PIN 1. LED 1 ANODE/LED 2 CATHODE
2. LED 1 CATHODE/LED 2 ANODE
3. NC
4. EMITTER
5. COLLECTOR
6. BASE

NOTES:
1. DIMENSIONING AND TOLERANCING PER ANSI Y14.5M, 1982.
2. CONTROLLING DIMENSION: INCH.
3. DIM L TO CENTER OF LEAD WHEN FORMED PARALLEL.
4. 730A-01 AND -02 OBSOLETE, NEW STANDARD 730A-03.

DIM	MILLIMETERS MIN	MILLIMETERS MAX	INCHES MIN	INCHES MAX
A	8.13	8.89	0.320	0.350
B	6.10	6.60	0.240	0.260
C	2.93	5.08	0.115	0.200
D	0.41	0.50	0.016	0.020
E	1.02	1.77	0.040	0.070
F	0.25	0.36	0.010	0.014
G	2.54 BSC		0.100 BSC	
J	0.21	0.30	0.008	0.012
K	2.54	3.81	0.100	0.150
L	7.62 BSC		0.300 BSC	
M	0°	15°	0°	15°
N	0.38	2.54	0.015	0.100

CASE 730A-03

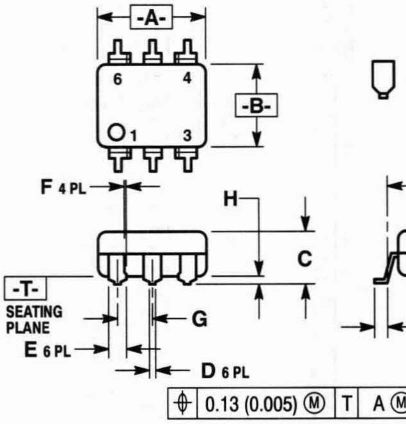

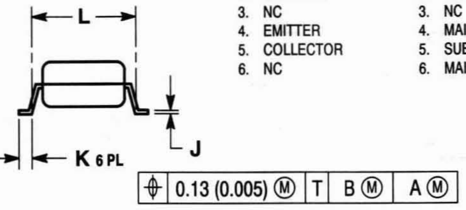

STYLE 1:
PIN 1. ANODE
2. CATHODE
3. NC
4. EMITTER
5. COLLECTOR
6. BASE

STYLE 3:
PIN 1. ANODE
2. CATHODE
3. NC
4. EMITTER
5. COLLECTOR
6. NC

STYLE 5:
PIN 1. ANODE
2. CATHODE
3. NC
4. OUTPUT
5. GROUND
6. V_{CC}

STYLE 6:
PIN 1. ANODE
2. CATHODE
3. NC
4. MAIN TERMINAL
5. SUBSTRATE
6. MAIN TERMINAL

STYLE 8:
PIN 1. LED 1 ANODE/LED 2 CATHODE
2. LED 1 CATHODE/LED 2 ANODE
3. NC
4. EMITTER
5. COLLECTOR
6. BASE

NOTES:
1. DIMENSIONING AND TOLERANCING PER ANSI Y14.5M, 1982.
2. CONTROLLING DIMENSION: INCH.
3. 730C-01 AND -02 OBSOLETE, NEW STANDARD 730C-03.

	MILLIMETERS		INCHES	
DIM	MIN	MAX	MIN	MAX
A	8.13	8.89	0.320	0.350
B	6.10	6.60	0.240	0.260
C	2.93	5.08	0.115	0.200
D	0.41	0.50	0.016	0.020
E	1.02	1.77	0.040	0.070
F	0.25	0.36	0.010	0.014
G	2.54 BSC		0.100 BSC	
H	0.51	0.63	0.020	0.025
J	0.20	0.30	0.008	0.012
K	0.16	0.88	0.006	0.035
L	8.13 BSC		0.320 BSC	

CASE 730C-03

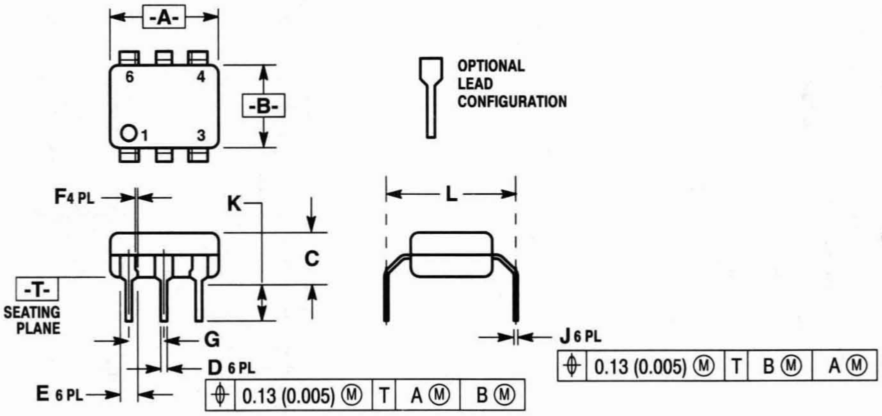

NOTES:
1. DIMENSIONING AND TOLERANCING PER ANSI Y14.5M, 1982.
2. CONTROLLING DIMENSION: INCH.
3. DIM L TO CENTER OF LEAD WHEN FORMED PARALLEL.
4. 730D-01 AND -02 OBSOLETE, NEW STANDARD 730D-03.

	MILLIMETERS		INCHES	
DIM	MIN	MAX	MIN	MAX
A	8.13	8.89	0.320	0.350
B	6.10	6.60	0.240	0.260
C	2.42	4.44	0.095	0.175
D	0.41	0.50	0.016	0.020
E	1.02	1.77	0.040	0.070
F	0.25	0.36	0.010	0.014
G	2.54 BSC		0.100 BSC	
J	0.20	0.30	0.008	0.012
K	3.38	—	0.133	—
L	10.16 BSC		0.400 BSC	

CASE 730D-03

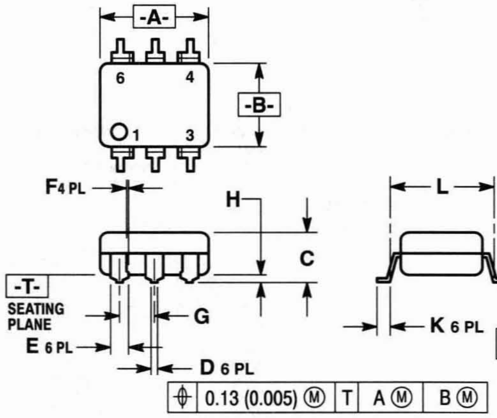

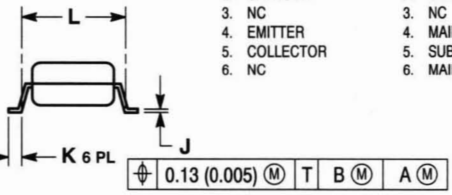

STYLE 1:
PIN 1. ANODE
2. CATHODE
3. NC
4. EMITTER
5. COLLECTOR
6. BASE

STYLE 3:
PIN 1. ANODE
2. CATHODE
3. NC
4. EMITTER
5. COLLECTOR
6. NC

STYLE 5:
PIN 1. ANODE
2. CATHODE
3. NC
4. OUTPUT
5. GROUND
6. V_{CC}

STYLE 6:
PIN 1. ANODE
2. CATHODE
3. NC
4. MAIN TERMINAL
5. SUBSTRATE
6. MAIN TERMINAL

STYLE 8:
PIN 1. LED 1 ANODE/LED 2 CATHODE
2. LED 1 CATHODE/LED 2 ANODE
3. NC
4. EMITTER
5. COLLECTOR
6. BASE

NOTES:
1. DIMENSIONING AND TOLERANCING PER ANSI Y14.5M, 1982.
2. CONTROLLING DIMENSION: INCH.
3. 730F-01 OBSOLETE, NEW STANDARD 730F-02.

	MILLIMETERS		INCHES	
DIM	MIN	MAX	MIN	MAX
A	8.13	8.89	0.320	0.350
B	6.10	6.60	0.240	0.260
C	2.93	4.65	0.095	0.183
D	0.41	0.50	0.016	0.020
E	1.02	1.77	0.040	0.070
F	0.25	0.36	0.010	0.014
G	2.54 BSC		0.100 BSC	
H	0.00	0.20	0.000	0.008
J	0.20	0.30	0.008	0.012
K	0.16	0.88	0.006	0.035
L	8.13 BSC		0.320 BSC	

CASE 730F-02

PACKAGE OUTLINE DIMENSIONS AND FOOTPRINTS (continued)

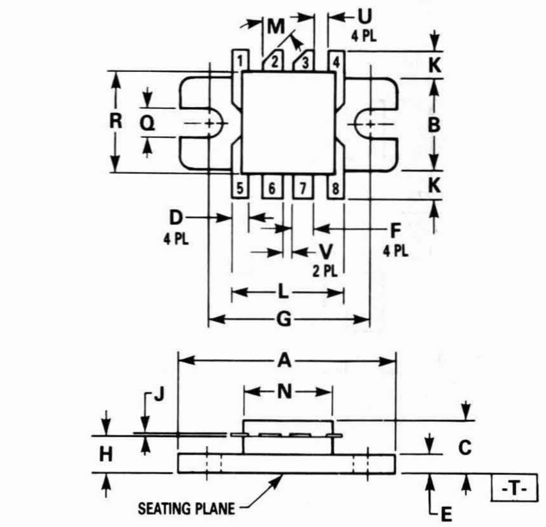

STYLE 1:
PIN 1. EMITTER (COMMON)
2. COLLECTOR
3. COLLECTOR
4. EMITTER (COMMON)
5. EMITTER (COMMON)
6. BASE
7. BASE
8. EMITTER (COMMON)

NOTES:
1. DIMENSIONS A AND B ARE DATUMS AND T IS A DATUM SURFACE.
2. POSITIONAL TOLERANCE FOR SLOTS: ⌖ φ 0.76 (0.030) Ⓜ | A Ⓜ | B Ⓜ
3. DIMENSIONING AND TOLERANCING PER ANSI Y14.5, 1973.

DIM	MILLIMETERS MIN	MILLIMETERS MAX	INCHES MIN	INCHES MAX
A	22.60	23.11	0.890	0.910
B	9.52	10.03	0.375	0.395
C	6.65	7.16	0.262	0.282
D	1.60	1.95	0.063	0.077
E	2.94	3.40	0.116	0.134
F	2.87	3.22	0.113	0.127
G	16.51 BSC		0.650 BSC	
H	4.01	4.36	0.158	0.172
J	0.07	0.15	0.003	0.006
K	4.34	4.90	0.171	0.193
L	12.44	12.95	0.490	0.510
M	45° NOM		45° NOM	
N	10.51	11.02	0.414	0.434
Q	3.04	3.35	0.120	0.132
R	9.90	10.41	0.390	0.410
U	1.02	1.27	0.040	0.050
V	0.64	0.89	0.025	0.035

CASE 744A-01

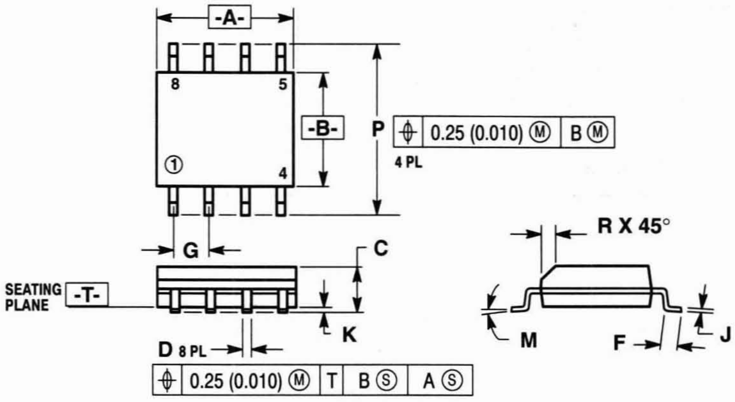

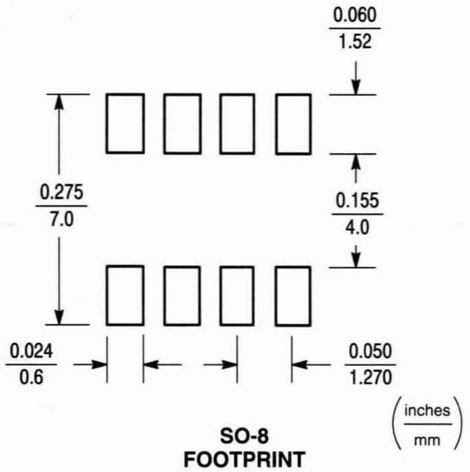

SO-8 FOOTPRINT

STYLE 1:
PIN 1. EMITTER
2. COLLECTOR
3. COLLECTOR
4. EMITTER
5. EMITTER
8. EMITTER

STYLE 11:
PIN 1. SOURCE (DIE 1)
2. GATE (DIE 1)
3. SOURCE (DIE 2)
4. GATE (DIE 2)
5. DRAIN (DIE 2)
6. DRAIN (DIE 2)
7. DRAIN (DIE 1)
8. DRAIN (DIE 1)

NOTES:
1. DIMENSIONS "A" AND "B" ARE DATUMS AND "T" IS A DATUM SURFACE.
2. DIMENSIONING AND TOLERANCING PER ANSI Y14.5M, 1982.
3. CONTROLLING DIM: MILLIMETER.
4. DIMENSION "A" AND "B" DO NOT INCLUDE MOLD PROTRUSION.
5. MAXIMUM MOLD PROTRUSION 0.15 (0.006) PER SIDE.
6. 751-01 AND -02 OBSOLETE, NEW STANDARD 751-03.

DIM	MILLIMETERS MIN	MILLIMETERS MAX	INCHES MIN	INCHES MAX
A	4.80	5.00	0.189	0.196
B	3.80	4.00	0.150	0.157
C	1.35	1.75	0.054	0.068
D	0.35	0.49	0.014	0.019
F	0.40	1.25	0.016	0.049
G	1.27 BSC		0.050 BSC	
J	0.18	0.25	0.007	0.009
K	0.10	0.25	0.004	0.009
M	0°	7°	0°	7°
P	5.80	6.20	0.229	0.244
R	0.25	0.50	0.010	0.019

CASE 751-03

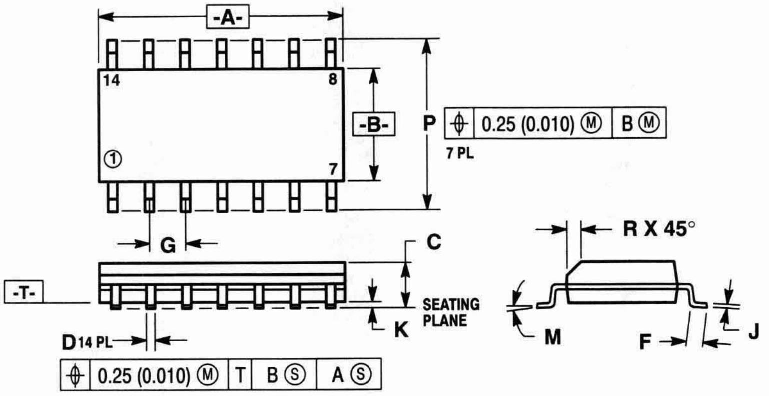

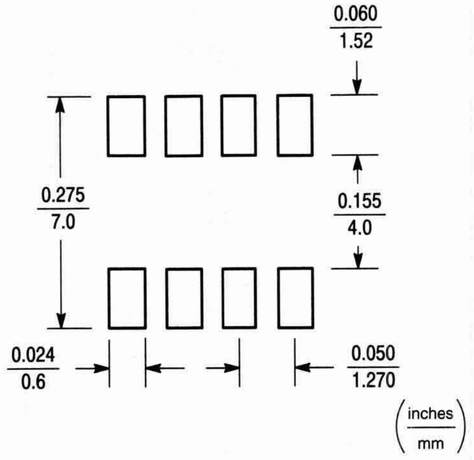

SO-14 FOOTPRINT

NOTES:
1. DIMENSIONS "A" AND "B" ARE DATUMS AND "T" IS A DATUM SURFACE.
2. DIMENSIONING AND TOLERANCING PER ANSI Y14.5M, 1982.
3. CONTROLLING DIMENSION: MILLIMETER.
4. DIMENSION A AND B DO NOT INCLUDE MOLD PROTRUSION.
5. MAXIMUM MOLD PROTRUSION 0.15 (0.006) PER SIDE.
6. 751A-01 IS OBSOLETE, NEW STANDARD 751A-02.

	MILLIMETERS		INCHES	
DIM	MIN	MAX	MIN	MAX
A	8.55	8.75	0.337	0.344
B	3.80	4.00	0.150	0.157
C	1.35	1.75	0.054	0.068
D	0.35	0.49	0.014	0.019
F	0.40	1.25	0.016	0.049
G	1.27 BSC		0.050 BSC	
J	0.19	0.25	0.008	0.009
K	0.10	0.25	0.004	0.009
M	0°	7°	0°	7°
P	5.80	6.20	0.229	0.244
R	0.25	0.50	0.010	0.019

CASE 751A-02

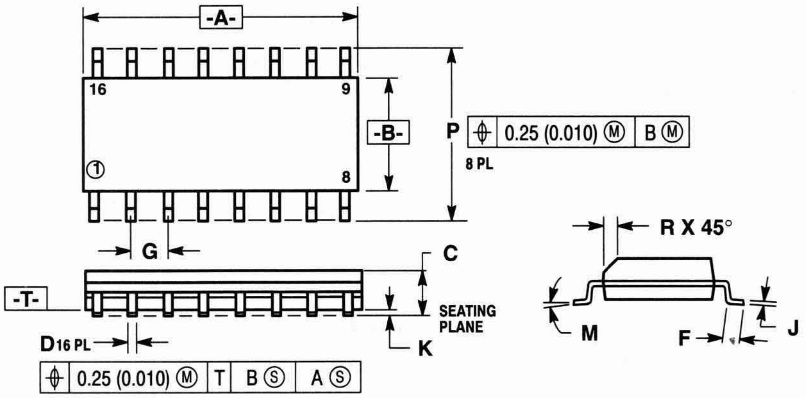

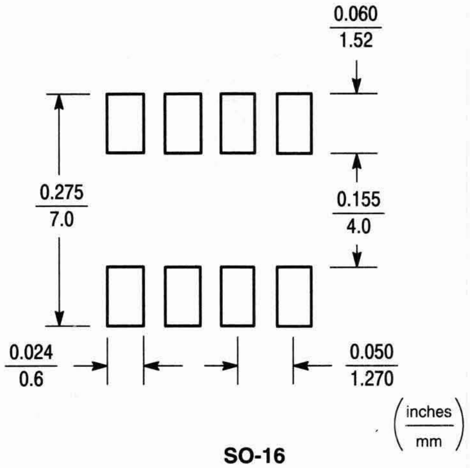

SO-16 FOOTPRINT

STYLE 1:
PIN 1. COLLECTOR
2. BASE
3. EMITTER
4. NO CONNECTION
5. EMITTER
6. BASE
7. COLLECTOR
8. COLLECTOR
9. BASE
10. EMITTER
11. NO CONNECTION
12. EMITTER
13. BASE
14. COLLECTOR
15. EMITTER
16. COLLECTOR

STYLE 7:
PIN 1. SOURCE N-CH
2. COMMON DRAIN
3. COMMON DRAIN
4. GATE P-CH
5. COMMON DRAIN
6. COMMON DRAIN
7. COMMON DRAIN
8. SOURCE P-CH
9. SOURCE P-CH
10. COMMON DRAIN
11. COMMON DRAIN
12. COMMON DRAIN
13. GATE N-CH
14. COMMON DRAIN
15. COMMON DRAIN
16. SOURCE N-CH

NOTES:
1. DIMENSIONS "A" AND "B" ARE DATUMS AND "T" IS A DATUM SURFACE.
2. DIMENSIONING AND TOLERANCING PER ANSI Y14.5M, 1982.
3. CONTROLLING DIMENSION: MILLIMETER.
4. DIMENSION A AND B DO NOT INCLUDE MOLD PROTRUSION.
5. MAXIMUM MOLD PROTRUSION 0.15 (0.006) PER SIDE.
6. 751B-01 IS OBSOLETE, NEW STANDARD 751B-03.

	MILLIMETERS		INCHES	
DIM	MIN	MAX	MIN	MAX
A	9.80	10.00	0.386	0.393
B	3.80	4.00	0.150	0.157
C	1.35	1.75	0.054	0.068
D	0.35	0.49	0.014	0.019
F	0.40	1.25	0.016	0.049
G	1.27 BSC		0.050 BSC	
J	0.19	0.25	0.008	0.009
K	0.10	0.25	0.004	0.009
M	0°	7°	0°	7°
P	5.80	6.20	0.229	0.244
R	0.25	0.50	0.010	0.019

CASE 751B-03

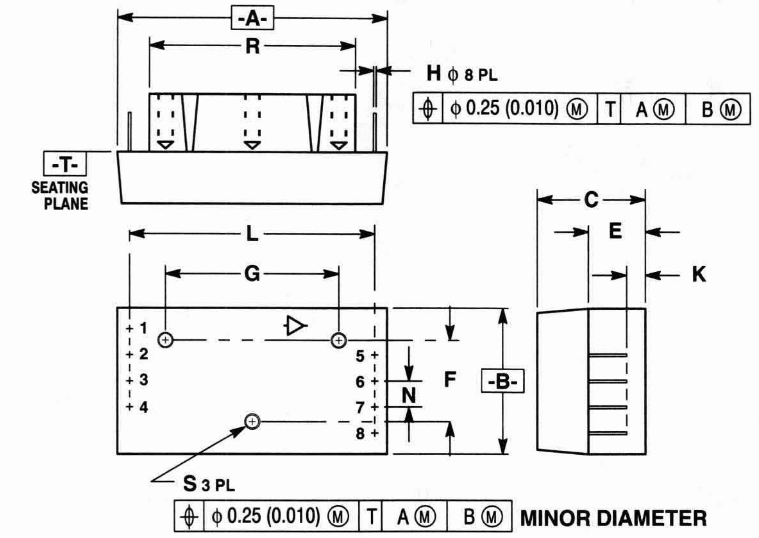

NOTES:
1. DIMENSIONING AND TOLERANCING PER ANSI Y14.5M, 1982.
2. CONTROLLING DIMENSION: INCH.

STYLE 1:
PIN 1. B+
2. GROUND
3. RF INPUT
4. GROUND
5. GROUND
6. RF OUTPUT
7. GROUND
8. B+

DIM	MILLIMETERS MIN	MILLIMETERS MAX	INCHES MIN	INCHES MAX
A	52.96	53.46	2.085	2.105
B	28.33	28.70	1.115	1.130
C	21.09	21.59	0.830	0.850
E	11.18	11.43	0.440	0.450
F	15.87 BSC		0.625 BSC	
G	34.16 BSC		1.345 BSC	
H	0.46	0.55	0.018	0.022
K	—	7.62	—	0.300
L	48.14 BSC		1.895 BSC	
N	5.08 BSC		0.200 BSC	
R	40.64 BSC		1.600 BSC	
S	—		6-32UNC-2B	

CASE 774A-01

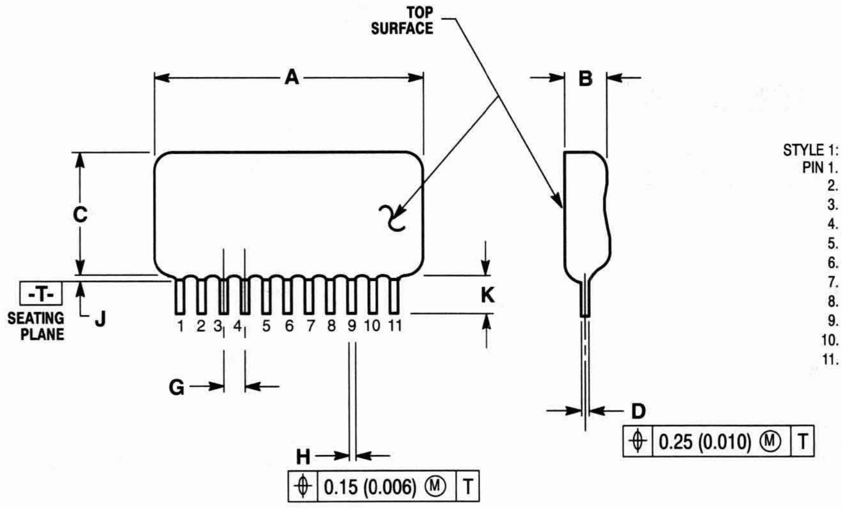

NOTES:
1. DIMENSIONING AND TOLERANCING PER ANSI Y14.5M, 1982.
2. CONTROLLING DIMENSION: INCH.

STYLE 1:
PIN 1. OUTPUT
2. GROUND
3. GROUND
4. GROUND
5. GROUND
6. GROUND
7. $+V_{CC}$
8. GROUND
9. GROUND
10. GROUND
11. INPUT

DIM	MILLIMETERS MIN	MILLIMETERS MAX	INCHES MIN	INCHES MAX
A	27.99	32.00	1.102	1.260
B	2.54	5.00	0.100	0.197
C	15.49	18.99	0.610	0.748
D	0.12	0.38	0.005	0.015
G	2.54 BSC		0.100 BSC	
H	0.38	0.63	0.015	0.025
J	—	0.99	—	0.039
K	3.99	5.06	0.157	0.200

CASE 790-01

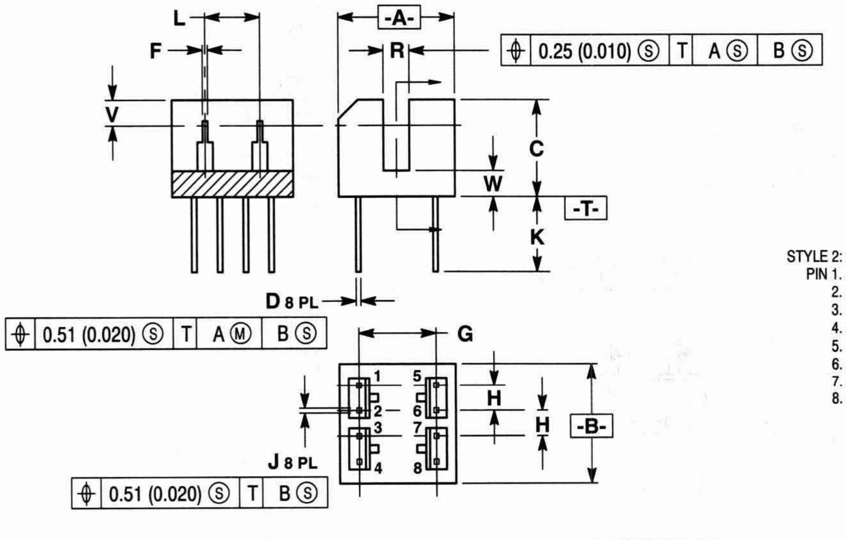

NOTES:
1. DIMENSIONING AND TOLERANCING PER ANSI Y14.5M, 1982.
2. CONTROLLING DIMENSION: INCH.

STYLE 2:
PIN 1. CATHODE
2. ANODE
3. CATHODE
4. ANODE
5. COLLECTOR
6. EMITTER
7. COLLECTOR
8. EMITTER

DIM	MILLIMETERS MIN	MILLIMETERS MAX	INCHES MIN	INCHES MAX
A	11.31	11.60	0.445	0.457
B	11.77	12.11	0.463	0.477
C	9.35	9.70	0.368	0.382
D	0.36	0.55	0.014	0.022
F	0.49	0.53	0.019	0.021
G	7.62 BSC		0.300 BSC	
H	2.54 BSC		0.100 BSC	
J	0.44	0.55	0.017	0.022
K	7.37	—	0.290	—
L	5.38 BSC		0.212 BSC	
R	2.37	2.71	0.093	0.107
V	2.54 BSC		0.100 BSC	
W	2.37	2.71	0.093	0.107

CASE 792-01

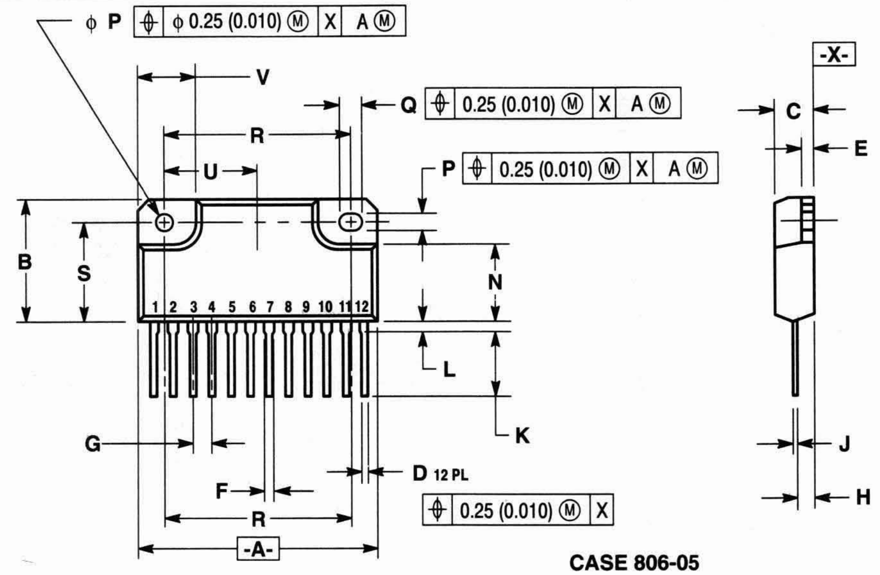

CASE 806-05

NOTES:
1. DIMENSIONING AND TOLERANCING PER ANSI Y14.5M, 1982.
2. CONTROLLING DIMENSION: INCH.
3. 806-01 THRU -04 OBSOLETE, NEW STANDARD 806-05.

DIM	MILLIMETERS MIN	MILLIMETERS MAX	INCHES MIN	INCHES MAX
A	31.30	31.70	1.230	1.250
B	15.80	16.20	0.622	0.638
C	4.98	5.20	0.196	0.205
D	0.69	0.99	0.027	0.039
E	1.48	1.82	0.058	0.072
F	1.27	1.60	0.050	0.063
G	2.54 BSC		0.100 BSC	
H	2.09	2.31	0.082	0.091
J	0.38	0.71	0.015	0.028
K	7.92	9.55	0.312	0.376
L	1.22	1.55	0.048	0.061
N	9.78	10.11	0.385	0.398
P	3.10	3.30	0.122	0.130
Q	3.69	3.91	0.145	0.154
R	24.38 BSC		0.960 BSC	
S	12.95 BSC		0.510 BSC	
U	12.20 BSC		0.480 BSC	
V	7.37	7.74	0.290	0.305

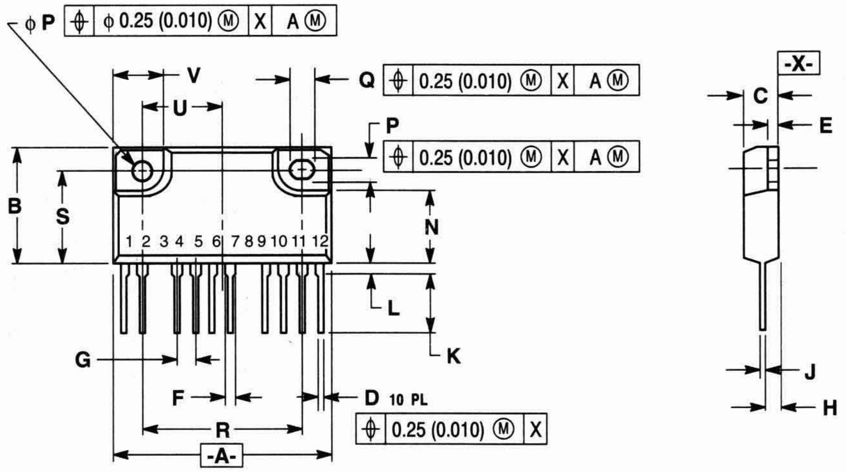

NOTES:
1. DIMENSIONING AND TOLERANCING PER ANSI Y14.5M, 1982.
2. CONTROLLING DIMENSION: INCH.

DIM	MILLIMETERS MIN	MILLIMETERS MAX	INCHES MIN	INCHES MAX
A	31.30	31.70	1.230	1.250
B	15.80	16.20	0.622	0.638
C	4.98	5.20	0.196	0.205
D	0.69	0.99	0.027	0.039
E	1.48	1.82	0.058	0.072
F	1.27	1.60	0.050	0.063
G	2.54 BSC		0.100 BSC	
H	2.09	2.31	0.082	0.091
J	0.38	0.71	0.015	0.028
K	7.92	9.55	0.312	0.376
L	1.22	1.55	0.048	0.061
N	9.78	10.11	0.385	0.398
P	3.10	3.30	0.122	0.130
Q	3.69	3.91	0.145	0.154
R	24.38 BSC		0.960 BSC	
S	12.95 BSC		0.510 BSC	
U	12.20 BSC		0.480 BSC	
V	7.37	7.74	0.290	0.305

CASE 806A-01

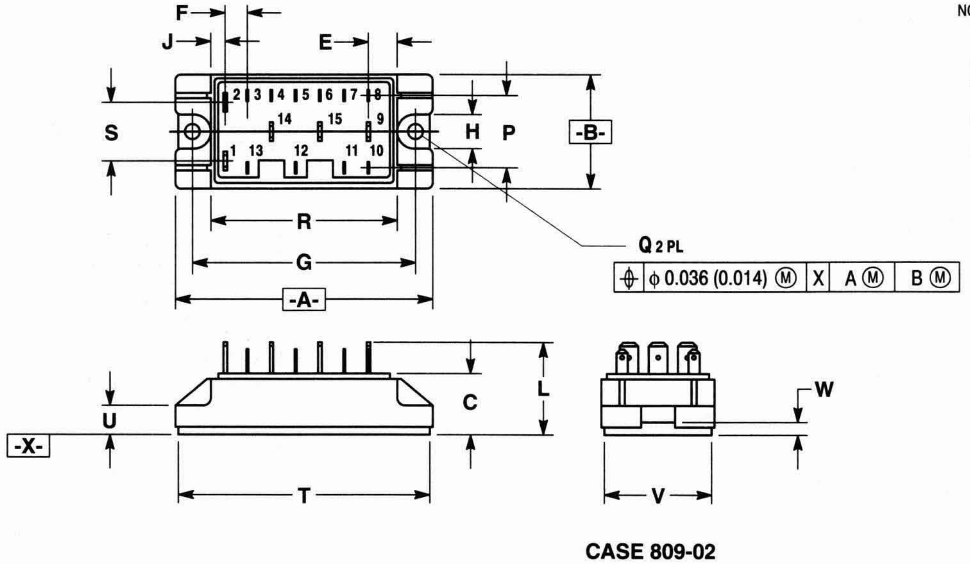

NOTES:
1. DIMENSIONING AND TOLERANCING PER ANSI Y14.5M, 1982.
2. CONTROLLING DIMENSION: MILLIMETER.
3. TERMINALS 3 THRU 8 AND 10 THRU 13 ARE FAST–ON–TAB #110.
4. TERMINALS 1, 2, 9, 14, AND 15 ARE FAST–ON TAB # 250
5. 809-01 OBSOLETE, NEW STANDARD 809-02.

DIM	MILLIMETERS MIN	MILLIMETERS MAX	INCHES MIN	INCHES MAX
A	87.5	88.5	3.445	3.484
B	38.5	39.5	1.516	1.555
C	15.0	18.0	0.591	0.708
E	9.9	11.1	0.390	0.437
F	7.5	8.5	0.296	0.334
G	76.0 BSC		2.99 BSC	
H	11.5	12.5	0.453	0.492
J	4.9	6.1	0.193	0.240
L	—	27.0	—	1.063
P	24.4	25.6	0.961	1.007
Q	5.1	5.7	0.201	0.224
R	63.5	64.5	2.500	2.539
S	15.5	16.5	0.611	0.649
T	85.5	86.5	3.367	3.405
U	7.5	9.0	0.296	0.354
V	36.5	37.5	1.438	1.476
W	2.7	3.3	0.107	0.129

CASE 809-02

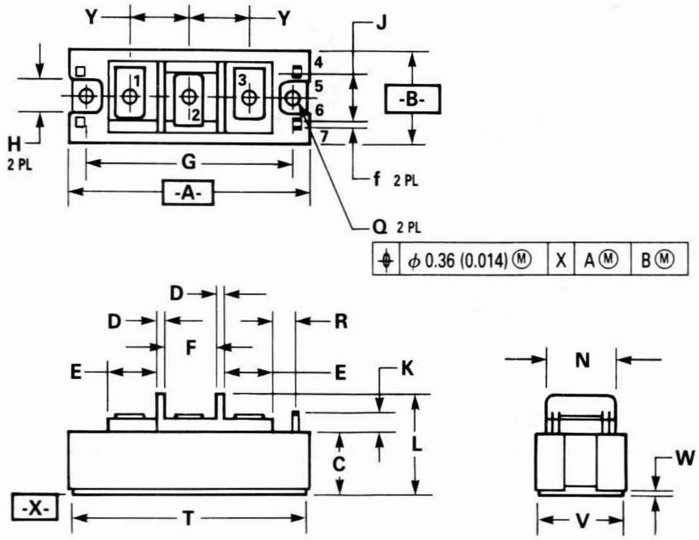

NOTES:
1. DIMENSIONING AND TOLERANCING PER ANSI Y14.5M, 1982.
2. CONTROLLING DIMENSION: MILLIMETER.
3. TERMINALS 4, 5, 6, AND 7 ARE FAST-ON-TAB #110.
4. TERMINALS 1, 2, AND 3 USE M5 SCREWS.

DIM	MILLIMETERS		INCHES	
	MIN	MAX	MIN	MAX
A	93.0	94.0	3.662	3.700
B	34.5	35.5	1.359	1.397
C	22.0	25.0	0.867	0.984
D	2.7	3.3	0.107	0.129
E	18.0	19.0	0.709	0.748
F	19.5	20.5	0.768	0.807
G	80.0 BSC		3.150 BSC	
H	11.9	13.1	0.469	0.515
J	16.5	17.5	0.650	0.688
K	7.4	8.6	0.292	0.338
L	—	38.0	—	1.496
N	26.5	27.5	1.044	1.082
Q	5.3	5.9	0.209	0.232
R	9.1	10.7	0.359	0.421
T	90.5	91.5	3.563	3.602
V	32.8	33.8	1.292	1.330
W	2.5	3.5	0.098	0.137
Y	22.5	23.5	0.886	0.925
f	3.4	4.6	0.134	0.181

CASE 813-02

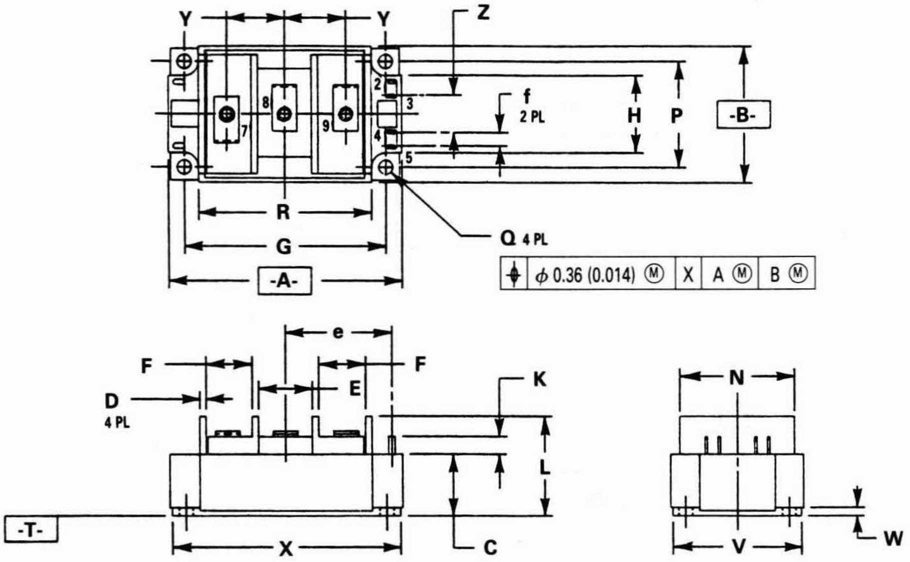

NOTES:
1. DIMENSIONING AND TOLERANCING PER ANSI Y14.5M, 1982.
2. CONTROLLING DIMENSION: MILLIMETER.
3. TERMINALS 1, 2, 3, 4, 5 AND 6 ARE FAST-ON-TAB #110.
4. TERMINALS 7, 8, AND 9 USE M5 SCREWS.

DIM	MILLIMETERS		INCHES	
	MIN	MAX	MIN	MAX
A	107.2	108.8	4.221	4.283
B	61.2	62.8	2.410	2.472
C	22.0	25.0	0.867	0.984
D	2.5	3.5	0.099	0.137
E	24.5	25.5	0.965	1.003
F	21.0	22.0	0.827	0.866
G	93.0 BSC		3.661 BSC	
H	34.2	35.8	1.347	1.409
K	7.4	8.6	0.292	0.338
L	—	38.0	—	1.496
N	53.2	54.8	2.095	2.157
P	48.0 BSC		1.890 BSC	
Q	6.2	6.8	0.244	0.267
R	79.2	80.8	3.119	3.181
V	59.2	60.8	2.331	2.393
W	3.5	4.5	0.138	0.177
X	105.2	106.8	4.142	4.204
Y	27.5	28.5	1.083	1.122
Z	16.5	17.5	0.650	0.688
e	48.5	49.5	1.910	1.948
f	5.5	6.5	0.217	0.255

CASE 814B-01

PACKAGE OUTLINE DIMENSIONS AND FOOTPRINTS (continued)

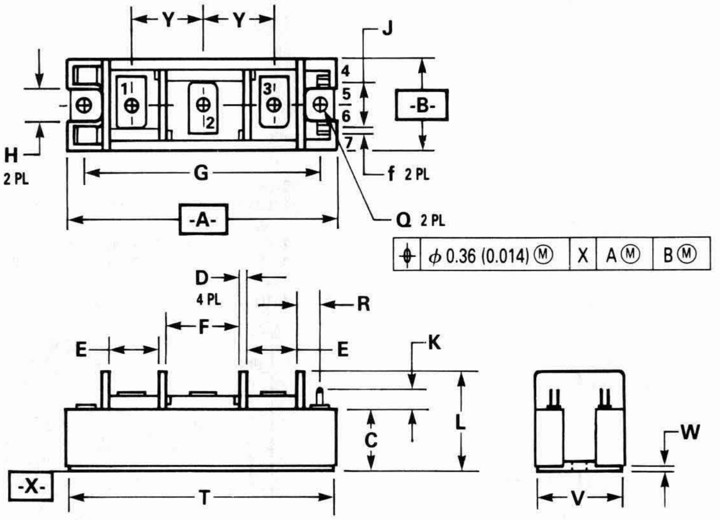

CASE 816-02

NOTES:
1. DIMENSIONING AND TOLERANCING PER ANSI Y14.5M, 1982.
2. CONTROLLING DIMENSION: MILLIMETER.
3. TERMINALS 4, 5, 6, AND 7 ARE FAST-ON-TAB #110.
4. TERMINALS 1, 2, AND 3 USE M5 SCREWS.

DIM	MILLIMETERS MIN	MILLIMETERS MAX	INCHES MIN	INCHES MAX
A	106.7	108.3	4.201	4.263
B	34.4	35.6	1.355	1.401
C	22.0	25.0	0.867	0.984
D	2.5	3.5	0.099	0.137
E	21.2	22.8	0.835	0.897
F	24.5	25.5	0.965	1.003
G	93.0 BSC		3.662 BSC	
H	11.9	13.1	0.469	0.515
J	17.4	18.6	0.685	0.732
K	7.0	9.0	0.276	0.354
L	—	38.0	—	1.496
Q	5.3	5.9	0.209	0.232
R	6.4	8.4	0.251	0.330
T	104.5	105.5	4.115	4.153
V	32.8	33.8	1.292	1.330
W	2.7	3.3	0.106	0.129
Y	27.5	28.5	1.083	1.122
f	3.4	4.6	0.134	0.181

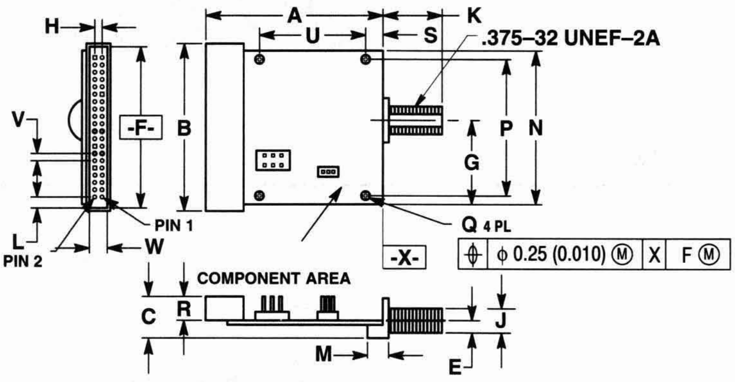

STYLE 2:
PIN 1. RXSYM0
3. RXSYM1
5. RXSYM2
7. RXSYM3
9. RXCLK
11. +5 VDC
13. +5 VDC
15. +5 VDC
17. TXCLK
19. EXTCLOCK
21. TXSYM3
23. TXSYM2
25. TXSYM1
27. TXSYM0
29. RESERVED
31. RESERVED
33. RESERVED
35. RESERVED
37. +12 VDC
39. –12 VDC

CASE 817A-01

NOTES:
1. DIMENSIONING AND TOLERANCING PER ANSI Y14.5M, 1982.
2. CONTROLLING DIMENSION: INCH.
3. 817-02 IS OBSOLETE, NEW STANDARD 817A-01.

DIM	MILLIMETERS MIN	MILLIMETERS MAX	INCHES MIN	INCHES MAX
A	61.47	62.50	2.420	2.460
B	57.30	60.00	2.255	2.322
C	14.00	15.00	0.550	0.590
E	4.45	5.00	0.175	0.195
F	55.00	56.90	2.165	2.240
G	28.96	29.50	1.140	1.160
H	2.40	2.67	0.095	0.105
J	8.25	8.76	0.325	0.345
K	20.00	21.00	0.790	0.830
L	3.30	4.45	0.130	0.175
M	7.00	7.75	0.275	0.305
N	53.00	53.60	2.090	2.110
P	47.0 BSC		1.86 BSC	
Q	2.80	3.30	0.110	0.130
R	8.00	8.76	0.315	0.345
S	6.1 BSC		0.24 BSC	
U	37.1 BSC		1.46 BSC	
V	2.40	2.67	0.095	0.105
W	5.80	6.60	0.230	0.260

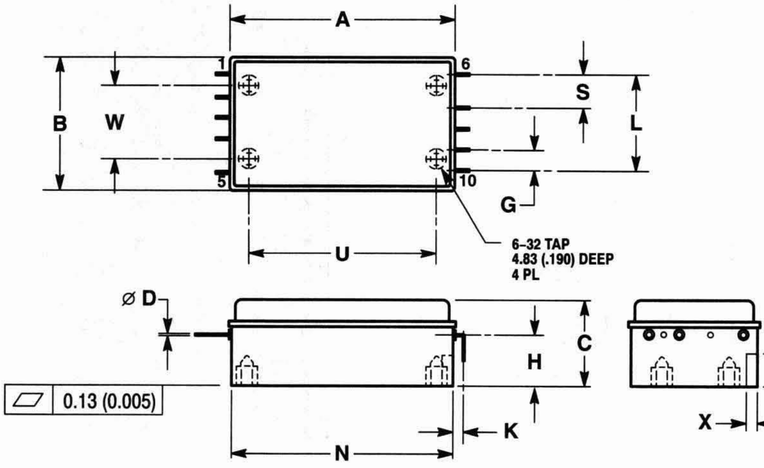

STYLE 1:
PIN 1. 24 V
2. GROUND
3. INPUT
4. GROUND
5. TEST
6. TEST
7. GROUND
8. OUTPUT
9. GROUND
10. 24 V

CASE 825-03

NOTES:
1. DIMENSIONING AND TOLERANCING PER ANSI Y14.5M, 1982.
2. CONTROLLING DIMENSION: INCH.
3. 825-01 AND -02 OBSOLETE, NEW STANDARD 825-03.

DIM	MILLIMETERS MIN	MILLIMETERS MAX	INCHES MIN	INCHES MAX
A	53.52	54.61	2.107	2.150
B	31.12	31.75	1.225	1.250
C	20.45	21.46	0.805	0.845
D	0.46	0.56	0.018	0.022
G	4.83	5.33	0.190	0.210
H	12.45	12.95	0.490	0.510
K	8.13	8.51	0.320	0.335
L	23.12	23.62	0.910	0.930
N	52.15	52.90	2.053	2.083
S	7.87	8.38	0.310	0.330
U	45.34	46.10	1.785	1.815
W	17.53	18.03	0.690	0.710
X	2.29	2.79	0.090	0.110
Y	7.37	7.87	0.290	0.310

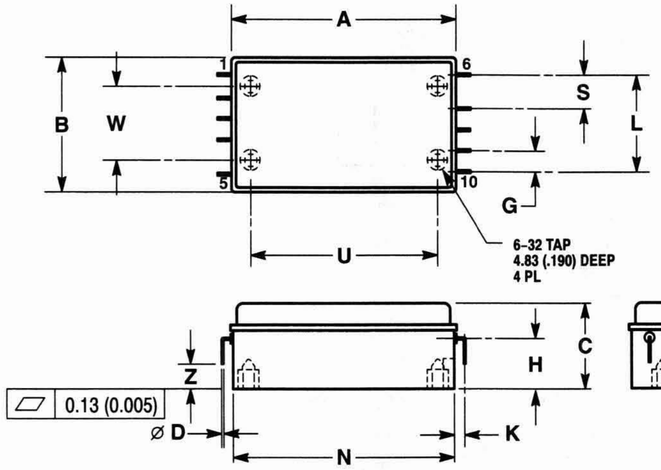

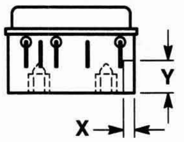

STYLE 1:
PIN 1. 24 V
2. GROUND
3. INPUT
4. GROUND
5. TEST
6. TEST
7. GROUND
8. OUTPUT
9. GROUND
10. 24 V

NOTES:
1. DIMENSIONING AND TOLERANCING PER ANSI Y14.5M, 1982.
2. CONTROLLING DIMENSION: INCH.
3. 825A-01 OBSOLETE, NEW STANDARD 825A-02.

DIM	MILLIMETERS		INCHES	
	MIN	MAX	MIN	MAX
A	53.52	54.61	2.107	2.150
B	31.12	31.75	1.225	1.250
C	20.45	21.46	0.805	0.845
D	0.46	0.56	0.018	0.022
G	4.83	5.33	0.190	0.210
H	12.45	12.95	0.490	0.510
K	2.54	3.05	0.100	0.120
L	23.12	23.62	0.910	0.930
N	52.15	52.90	2.053	2.083
S	7.87	8.38	0.310	0.330
U	45.34	46.10	1.785	1.815
W	17.53	18.03	0.690	0.710
X	2.29	2.79	0.090	0.110
Y	7.37	7.87	0.290	0.310
Z	5.84	6.86	0.230	0.270

CASE 825A-02

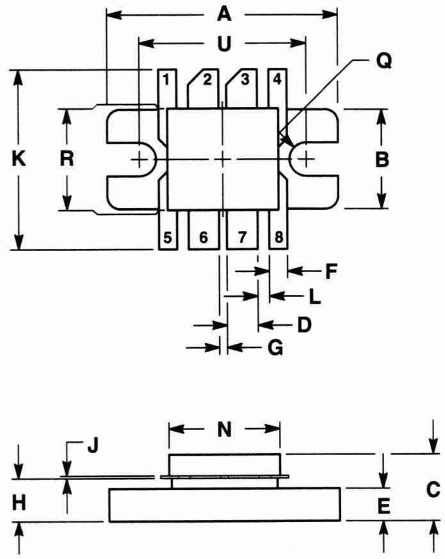

STYLE 1:
PIN 1. EMITTER
2. COLLECTOR
3. COLLECTOR
4. EMITTER
5. EMITTER
6. BASE
7. BASE
8. EMITTER

NOTES:
1. DIMENSIONING AND TOLERANCING PER ANSI Y14.5M, 1982.
2. CONTROLLING DIMENSION: INCH.

DIM	MILLIMETERS		INCHES	
	MIN	MAX	MIN	MAX
A	22.66	23.06	0.892	0.908
B	9.61	10.00	0.378	0.394
C	6.25	6.75	0.246	0.266
D	2.80	3.30	0.110	0.130
E	2.93	3.42	0.115	0.135
F	1.53	2.03	0.060	0.080
G	0.51	1.01	0.020	0.040
H	3.99	4.39	0.157	0.173
J	0.11	0.15	0.004	0.006
K	15.85	19.50	0.624	0.768
L	0.89	1.39	0.035	0.055
N	10.75	11.25	0.423	0.443
Q	3.05	3.55	0.120	0.140
R	9.76	10.26	0.384	0.404
U	16.26	16.76	0.640	0.660

CASE 827-01

PACKAGE OUTLINE DIMENSIONS AND FOOTPRINTS (continued)

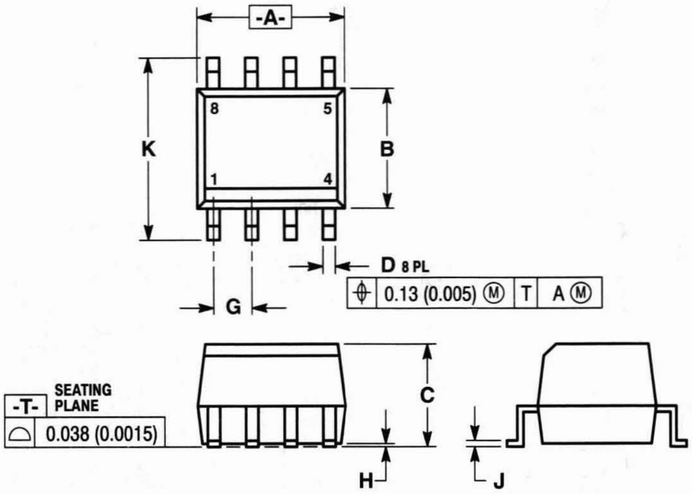

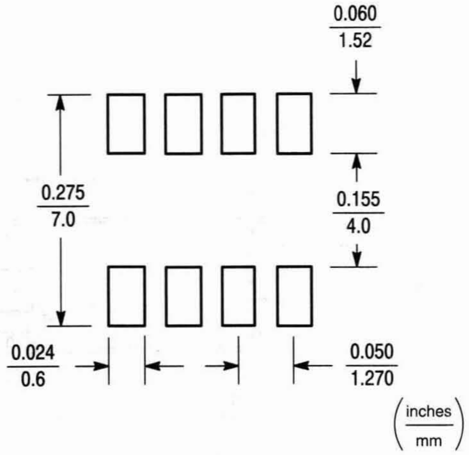

OPTO SO-8 FOOTPRINT

NOTES:
1. DIMENSIONING AND TOLERANCING PER ANSI Y14.5M, 1982.
2. CONTROLLING DIMENSION: INCH.

STYLE 1:
PIN 1. ANODE
2. CATHODE
3. NC
4. NC
5. EMITTER
6. COLLECTOR
7. BASE
8. NC

	MILLIMETERS		INCHES	
DIM	MIN	MAX	MIN	MAX
A	4.63	5.13	0.182	0.202
B	3.66	4.16	0.144	0.164
C	3.13	3.63	0.123	0.143
D	0.28	0.53	0.011	0.021
G	1.27 BSC		0.050 BSC	
H	0.08	0.20	0.003	0.008
J	0.16	0.25	0.006	0.010
K	5.69	6.19	0.224	0.244

CASE 846-01

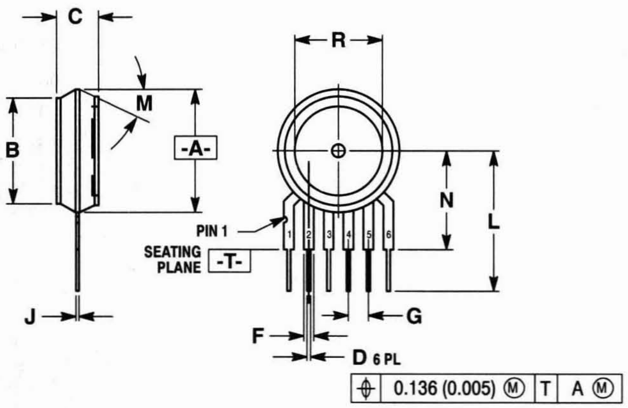

NOTES:
1. DIMENSIONING AND TOLERANCING PER ANSI Y14.5M, 1982.
2. CONTROLLING DIMENSION: INCH.
3. 867-01 THRU -03 OBSOLETE, NEW STANDARD 867-04.

	MILLIMETERS		INCHES	
DIM	MIN	MAX	MIN	MAX
A	14.99	15.62	0.590	0.615
B	12.83	13.34	0.505	0.525
C	4.95	5.72	0.195	0.225
D	0.68	0.84	0.027	0.033
F	1.22	1.32	0.048	0.052
G	2.54 BSC		0.100 BSC	
J	0.36	0.40	0.014	0.016
L	17.40	18.16	0.685	0.715
M	30° NOM		30° NOM	
N	12.45	12.95	0.490	0.510
R	10.67	11.43	0.420	0.450

CASE 867-04

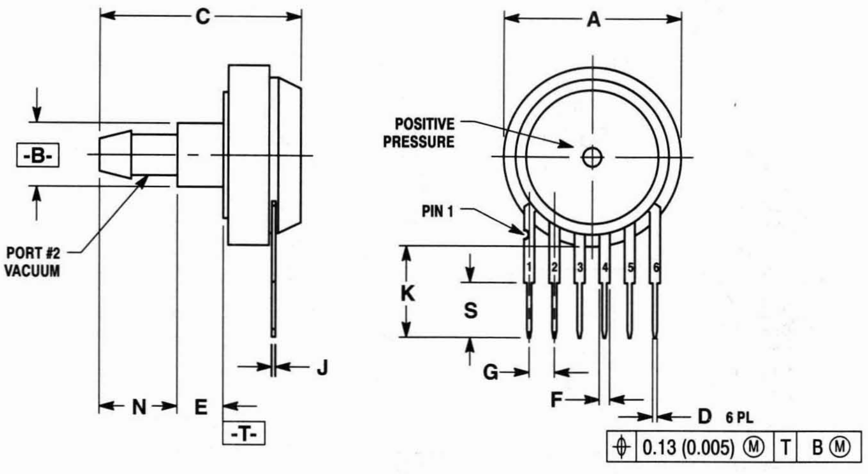

NOTES:
1. DIMENSIONING AND TOLERANCING PER ANSI Y14.5M, 1982.
2. CONTROLLING DIMENSION: INCH.
3. 867A-01 AND -02 OBSOLETE, NEW STANDARD 867A-03.

DIM	MILLIMETERS MIN	MILLIMETERS MAX	INCHES MIN	INCHES MAX
A	17.53	18.28	0.690	0.720
B	6.28	6.42	0.247	0.253
C	19.81	20.82	0.780	0.820
D	0.68	0.84	0.027	0.033
E	4.52	4.69	0.178	0.185
F	1.22	1.32	0.048	0.052
G	2.54 BSC		0.100 BSC	
J	0.36	0.40	0.014	0.016
K	8.51	9.14	0.335	0.360
N	7.75	8.00	0.305	0.315
S	5.59	6.10	0.220	0.240

CASE 867A-03

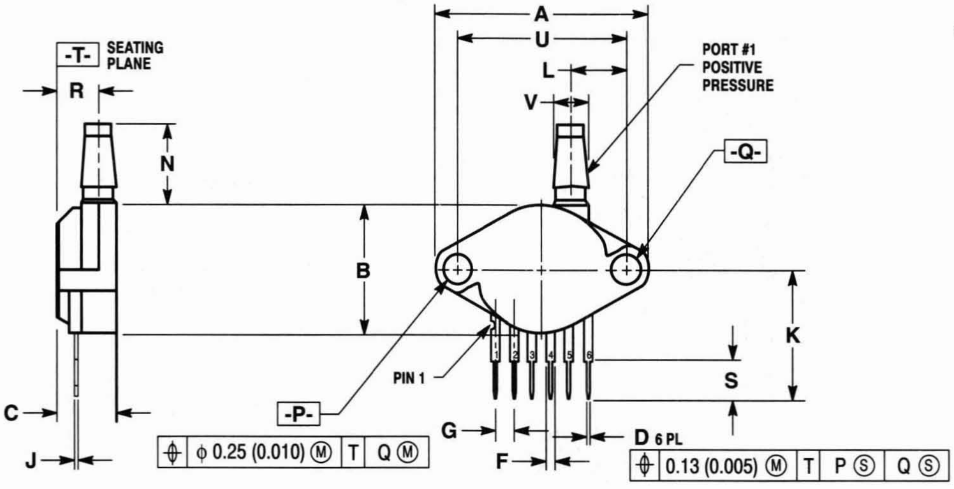

NOTES:
1. DIMENSIONING AND TOLERANCING PER ANSI Y14.5M, 1982.
2. CONTROLLING DIMENSION: INCH.
3. 867B-01 AND -02 OBSOLETE, NEW STANDARD 867B-03.

DIM	MILLIMETERS MIN	MILLIMETERS MAX	INCHES MIN	INCHES MAX
A	28.95	29.97	1.140	1.180
B	17.40	18.16	0.685	0.715
C	7.87	8.26	0.310	0.325
D	0.68	0.84	0.027	0.033
F	1.22	1.32	0.048	0.052
G	2.54 BSC		0.100 BSC	
J	0.36	0.41	0.014	0.016
K	17.27	18.03	0.680	0.710
L	7.34	7.62	0.290	0.300
N	10.67	11.12	0.420	0.440
P	3.89	4.03	0.153	0.159
Q	3.89	4.03	0.153	0.159
R	5.87	6.35	0.231	0.250
S	5.84 REF		0.230 REF	
U	23.11 BSC		0.910 BSC	
V	4.62	4.93	0.182	0.194

CASE 867B-03

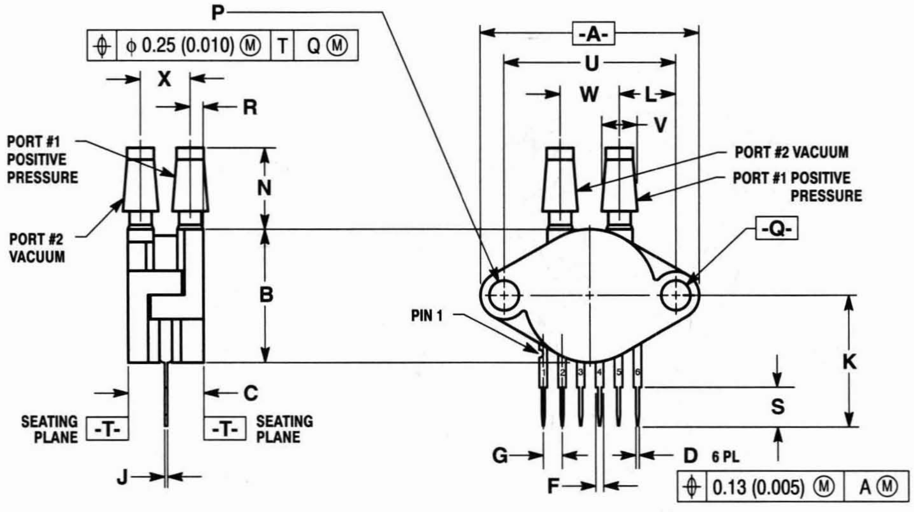

NOTES:
1. DIMENSIONING AND TOLERANCING PER ANSI Y14.5M, 1982.
2. CONTROLLING DIMENSION: INCH.
3. 867C-01 AND -02 OBSOLETE, NEW STANDARD 867C-03.

DIM	MILLIMETERS MIN	MILLIMETERS MAX	INCHES MIN	INCHES MAX
A	28.95	29.97	1.140	1.180
B	17.40	18.16	0.685	0.715
C	9.65	10.60	0.380	0.420
D	0.68	0.84	0.027	0.033
F	1.22	1.32	0.048	0.052
G	2.54 BSC		0.100 BSC	
J	0.36	0.40	0.014	0.016
K	17.27	18.03	0.680	0.710
L	7.34	7.62	0.290	0.300
N	10.67	11.12	0.420	0.440
P	3.89	4.03	0.153	0.159
Q	3.89	4.03	0.153	0.159
R	1.60	2.11	0.063	0.083
S	5.84 REF		0.230 REF	
U	23.11 BSC		0.910 BSC	
V	4.62	4.93	0.182	0.194
W	7.87	8.38	0.310	0.330
X	6.30	7.06	0.248	0.278

CASE 867C-03

PACKAGE OUTLINE DIMENSIONS AND FOOTPRINTS (continued)

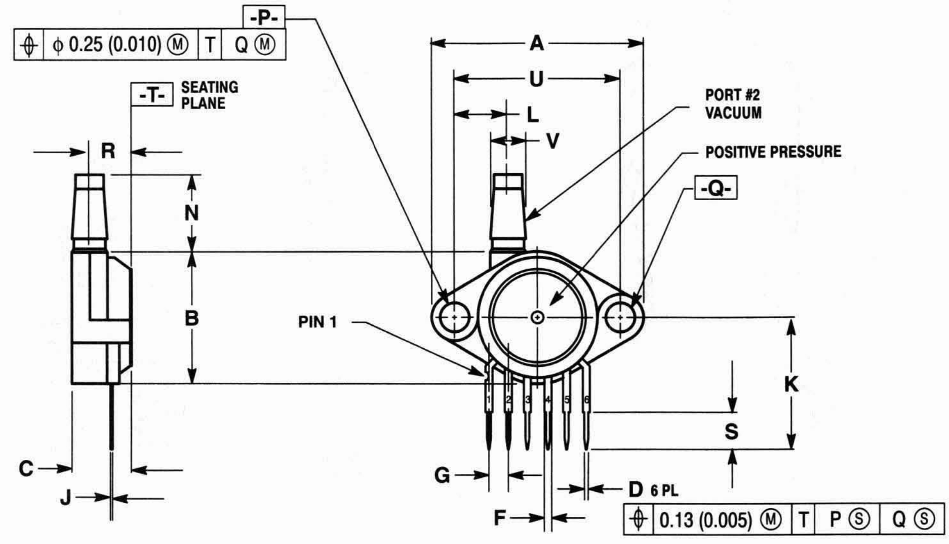

CASE 867D-03

NOTES:
1. DIMENSIONING AND TOLERANCING PER ANSI Y14.5M, 1982..
2. CONTROLLING DIMENSION: INCH.
3. 867D-01 AND -02 OBSOLETE, NEW STANDARD 867D-03.

DIM	MILLIMETERS MIN	MILLIMETERS MAX	INCHES MIN	INCHES MAX
A	28.95	29.97	1.140	1.180
B	17.40	18.16	0.685	0.715
C	7.87	8.26	0.310	0.325
D	0.68	0.84	0.027	0.033
F	1.22	1.32	0.048	0.052
G	2.54 BSC		0.100 BSC	
J	0.36	0.41	0.014	0.016
K	17.27	18.03	0.680	0.710
L	7.34	7.62	0.290	0.300
N	10.67	11.12	0.420	0.440
P	3.89	4.03	0.153	0.159
Q	3.89	4.03	0.153	0.159
R	5.87	6.35	0.231	0.250
S	5.84 REF		0.230 REF	
U	23.11 BSC		0.910 BSC	
V	4.62	4.93	0.182	0.194

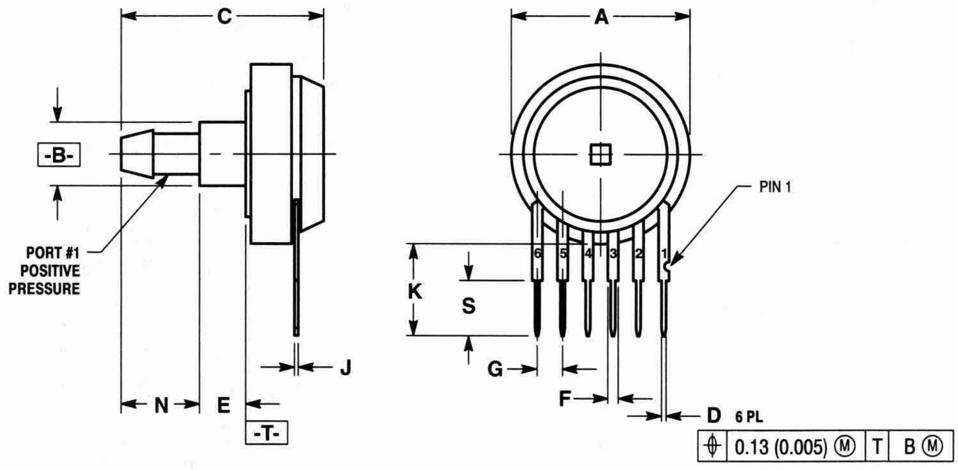

CASE 867E-02

NOTES:
1. DIMENSIONING AND TOLERANCING PER ANSI Y14.5M, 1982.
2. CONTROLLING DIMENSION: INCH.
3. 867E-01 OBSOLETE, NEW STANDARD 867E-02.

DIM	MILLIMETERS MIN	MILLIMETERS MAX	INCHES MIN	INCHES MAX
A	17.53	18.28	0.690	0.720
B	6.28	6.42	0.247	0.253
C	19.81	20.82	0.780	0.820
D	0.68	0.84	0.027	0.033
E	4.52	4.69	0.178	0.185
F	1.22	1.32	0.048	0.052
G	2.54 BSC		0.100 BSC	
J	0.36	0.40	0.014	0.016
K	8.51	9.14	0.335	0.360
N	7.75	8.00	0.305	0.315
S	5.59	6.10	0.220	0.240

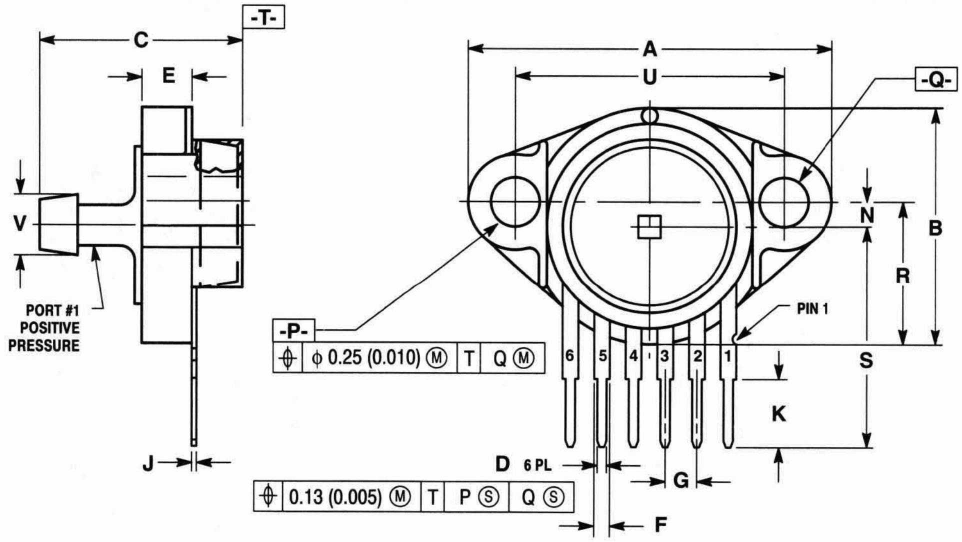

CASE 867F-02

NOTES:
1. DIMENSIONING AND TOLERANCING PER ANSI Y14.5M, 1982.
2. CONTROLLING DIMENSION: INCH.
3. 867F-01 OBSOLETE, NEW STANDARD 867F-02.

DIM	MILLIMETERS MIN	MILLIMETERS MAX	INCHES MIN	INCHES MAX
A	27.30	28.70	1.075	1.130
B	18.80	19.30	0.740	0.760
C	16.13	17.02	0.635	0.670
D	0.68	0.84	0.027	0.033
E	4.06	4.57	0.160	0.180
F	1.22	1.32	0.048	0.052
G	2.54 BSC		0.100 BSC	
J	0.36	0.40	0.014	0.016
K	5.84 REF		0.230 REF	
N	1.78	2.03	0.070	0.080
P	3.81	4.06	0.150	0.160
Q	3.81	4.06	0.150	0.160
R	11.30	11.68	0.445	0.460
S	17.40	18.16	0.685	0.715
U	21.33	21.84	0.840	0.860
V	4.69	4.95	0.185	0.195

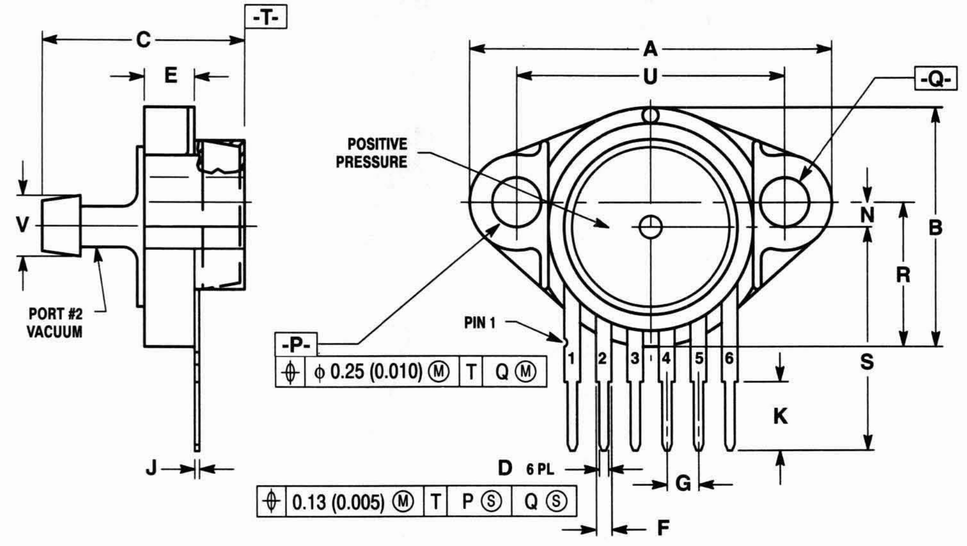

CASE 867G-02

NOTES:
1. DIMENSIONING AND TOLERANCING PER ANSI Y14.5M, 1982.
2. CONTROLLING DIMENSION: INCH.
3. 867G-01 OBSOLETE, NEW STANDARD 867G-02.

DIM	MILLIMETERS		INCHES	
	MIN	MAX	MIN	MAX
A	27.30	28.70	1.075	1.130
B	18.80	19.30	0.740	0.760
C	16.13	17.02	0.635	0.670
D	0.68	0.84	0.027	0.033
E	4.06	4.57	0.160	0.180
F	1.22	1.32	0.048	0.052
G	2.54 BSC		0.100 BSC	
J	0.36	0.40	0.014	0.016
K	5.59	6.10	0.220	0.240
N	1.78	2.03	0.070	0.080
P	3.81	4.06	0.150	0.160
Q	3.81	4.06	0.150	0.160
R	11.30	11.68	0.445	0.460
S	17.40	18.16	0.685	0.715
U	21.33	21.84	0.840	0.860
V	4.69	4.95	0.185	0.195

Military Integrated Circuits and Discrete Products

In Brief . . .

Motorola, Inc. is one of the world's leading manufacturers of electronic equipment, systems and components. Motorola products include two-way radios, pagers, cellular and mobile telephones, defense and aerospace electronics, automotive and industrial equipment, data communications, information processing equipment and semiconductor products. Motorola is one of the few end-equipment manufacturers that can draw on a complement of government electronics and semiconductor technology.

Motorola has been an industry leader and consistent manufacturer of semiconductors since the advent of the technology, and has since emerged as a world-wide leader of leading-edge technology. Motorola's leadership position applies to products such as the 68000 series microprocessor including the 68040, the newest and most powerful member of the family, our DSP family including the DSP56001 and the new DSP 96000, logic, linear, discretes, memory components, ASIC and our state of the art 88000 RISC microprocessor.

Motorola has a long history of providing competitive products to the military and aerospace industry. Motorola supplies high reliability semiconductors to these markets through two major groups: the Military Products Operation (MPO) and the Discrete Military Operation (DMO). Together we represent over 60 years of successful partnerships with our military and aerospace customers.

MPO's charter is to provide a broad and balanced portfolio of defect-free, low cost products screened to MIL-M-38510 and MIL-STD-883C specifications, delivered on time, with superior service to the customer. Similarly, DMO's portfolio covers a broad range of 1N-- and 2N-- products tested to JAN, JTX, JTXV and JAN S specifications.

The Military Products Operation and Discrete Military Operation are 100% dedicated to the manufacture and supply of standard military products, with controlled engineering, manufacturing and administrative resources. Products are manufactured, screened and tested worldwide , on lines certified to the requirements of the pertinent military specifications.

Page

Product Process Flows 6.1-2

Manufacturing, Quality & Test 6.1-12

Packaging , Mechanical Data & Nomenclature 6.1-17

Chip & Wafer Products 6.1-23

Analog/Telecom & Special Function Products 6.2-2

Logic Products 6.2-5

Memory Products 6.2-22

Microprocessor & Microcontroller Products 6.2-27

RISC & DSP Products 6.2-30

Discrete Products 6.3-1

MIL-Qualified Products 6.3-5

MIL-Processed Products 6.3-12

REWARRANTY POLICY

MILITARY PRODUCTS OPERATION

PARAGRAPH 4.2 OF MIL-M-38510H AMENDMENT 5

Section 4.2 of the above specification has been amended as follows:

"Procedures for microcircuits held by manufacturers. The requirements for microcircuits held by manufactures or distributors for more than 36 months has been deleted. However, it is recommended that the users with inspection lot identification codes in excess of 36 months verify that the devices remain solderable and functional prior to the next level assembly (i.e., that the devices have not been damaged or degraded by storage or handling)."

As a result of the above statement, effective January 01, 1991, **Motorola MPO will no longer automatically rewarranty distribution inventory every three (3) years**. Current distribution inventories will therefore be shippable to OEM's regardless of date codes.

In an effort to address some of our customers' recent concerns over solderability shelf-life, we are implementing an Internal Procedure to Resolder and Functionally test any factory inventory which exceeds 24 months, prior to shipment, per the following:

Motorola Internal Procedures		
Requirement	**Old Process**	**New Process**
Rewarranty Required	Yes	No
6 month warranty remaining prior to shipping to distributor	Yes	No
Group "A" Sample DC/AC-All Temps.	Yes	No
Solderability (B3) Sample	Yes	No
Visual and Mechanical Sample	Yes	Yes
100% Resolder DIP	No	Yes
100% DC room Temp.	No	Yes
Fine and Gross Leak Sample	No	Yes
100% Visual and Mechanical	No	Yes

Existing distribution inventory is not to be returned for the New Process Flow.

Concerning the MIL spec recommendation that users with product having date codes older than 36 months be verified for solderability and functionality, it is our position that the end customers perform this verification on their aged inventories themselves, at their discretion.

We hope this clarifies our position. Please contact MPO Customer Service if you have any questions.

Military Semiconductor
Integrated Circuits & Discrete Products

Process Flows

The process flows for our integrated circuit and discrete products are as follows:

JAN S	All discrete product assembled, screened and inspected per the applicable requirements of MIL-S-19500. Electrical parameters and marking requirements shall be as specified in the applicable detail specification. Product shall be manufactured in the U.S. on DESC certified lines. These products are most commonly produced for space applications.
Motorola S	All I/C product assembled, screened and inspected per the requirements of Motorola Processing Document 12MRM51815A. Electrical parameters and marking requirements shall be as specified in Motorola's Class S Master List: 48ARM51950A. Product shall be manufactured in the U.S.. These products are most commonly produced for space applications, where fully compliant JANS is not required.
JAN	All discrete product assembled, screened and inspected per the applicable requirements of MIL-S-19500. Electrical parameters, test conditions, and marking requirements shall be as specified in the applicable detail specification. Product may be assembled in DESC approved off-shore facilities. Testing shall be done in the USA using DESC qualified facilities. These products are presently being removed from the QPL as the detail specifications are being revised. Recommended replacement is the JANTX level.
JAN B	All product assembled, screened and inspected per the applicable requirement of MIL- M-38510. Electrical parameters and marking requirements shall be as specified in the applicable detail specification. Product shall be manufactured in the U.S. on a DESC certified line. These products are produced for military applications.
JAN TX	All discrete product assembled, screened and inspected per the applicable requirements of MIL-S-19500. Electrical parameters, test conditions and marking requirements shall be as specified in the applicable specification. Product assembly and high temperature storage life may be done in DESC approved off-shore facilities. Screening and testing must be done in the USA on DESC certified lines. These products are produced for general military applications.
JAN TXV	All discrete product assembled, screened and inspected per the applicable requirements of MIL-S-19500. Electrical parameters, test conditions and marking requirements shall be as specified in the applicable detail specifications. Product must be assembled in DESC approved USA facilities. Testing shall be performed in the USA using DESC qualified facilities. These products are recommended when higher level of reliability than JTX is required.
SMD	All product assembled, screened, inspected and certified to the requirements of paragraph 1.2.1. of MIL-STD-883C. Electrical parameters and marking requirements shall be as specified in the SMD. These products are produced for military applications.

* Generic and Lot Traceability Data are provided at a nominal Fee. Please contact your local sales office or the Military Service Center for more information.

Process Flows (continued)

DESC Drawings	All product assembled, screened and inspected per the applicable requirements of MIL- S-19500. Electrical parameters and test conditions are specified in the detail specification. Fabrication, assembly, screening and testing are not limited to USA facilities. These products are produced for all levels of military applications where no MIL-S-19500 detail specification exists. DESC drawings are similar to SMD devices for integrated circuits.
883C	All I/C product assembled, screened and inspected per the requirements of Paragraph 1.2.1 of MIL-STD-883C. Electrical parameters shall be as specified in the applicable detail specification. Marking shall be in accordance with JEDEC Publication 101. Fabrication, assembly, screening and inspection are not restricted to domestic facilities. However, the facilities must be certified per the requirements of Paragraph 1.2.1.. These products are produced for military applications.
MEP1	Integrated circuits which are assembled per the standard commercial flow , except for the addition of PIND, pre burn-in electrical tests, burn-in, final electrical tests and Group A & B inspections which shall be per M5004 and M5005 of MIL-STD-883C. Electrical parameters shall be as specified in the applicable detail specification. Marking requirements are in accordance with those specified in JEDEC Publication 101, except the class designator “EP1” which replaces class designator “B” and the JEDEC designator “JC” and the “C” are omitted. Fabrication, assembly, screening and inspection are not restricted to domestic or certified facilities. These products are produced for military applications which do not require JAN, SMD or 883C compliant product.
MEP2	Same as MEP 1 flow with the following exceptions: PIND is not performed and the part number class designator shall be “EP2.”
MEP3	Same as MEP 1 flow with the following exceptions: PIND testing, pre burn-in electrical tests and burn-in is omitted and the part number class designator shall be “EP3.”
MIL-Processed	All discrete product assembled, screened and inspected per the applicable requirements of MIL-S-19500. Electrical parameters and test conditions are specified in the Motorola military data sheet. Assembly, screening and testing are not limited to USA facilities. These products are produced for all levels of military applications where no MIL-S-19500 detail specification exists.

* Generic and Lot Traceability Data are provided at a nominal Fee. Please contact your local sales office or the Military Service Center for more information.

MPO Class "S" Product Assurance Requirements

Motorola offers a higher level of IC processing than 883 Class B for our customers' use patterns after the 38510 Class "S" flow. This process captures the essence of 38510 "S" in most all methods and is particularly useful to customers requiring JAN "S" devices but are unable to obtain them. This process is completely captured in Motorola Specification 12MRM51815A and is available to our customers upon request. A comparison of JAN "S", JAN "B" and Motorola's basic requirements appears in the table below.

Requirements	JAN 38510 Class "S"	JAN 38510 Class "B"	Motorola Class "S" (12MRM51815A)
Qualifications, General			
Line Certification	X	X	X (By MPO)
Device & Package Qual/MIL-M-38510	X	X	X (By MPO)
Change Control/MIL-M-38510	X	X	X
Wafer Lot Acceptance	X	—	X (Per internal spec Similar to 5007. SEM or Current Density)
Traceability	X	X	X
GSI	X	X	X
In process Inspection	X	X	X
Screening (5004)			
Precap Visual	2010A (GSI/CSI)	2010B or Alt. Per 38510	(CSI/GSI) 2010A with modifications specified in (12MRM51815A)
Temp. Cycle	X	X	X (50 Cycle Min. when alternate inspection is used.
Constant Acceleration	X	X	X
PIND	X	—	X
Serialization	X	—	X (Lot Size Not Limited)
Interim Electrical	X	—	X
Burn-In	240 Hrs.	160 Hrs. or Equivalent	240 Hrs. or Equivalent
Seal (Fine/Gross Leak)	X	X	X
Final Electric	X	X	X
Radiographic	X	—	X
External Visual	X	X	X
Non Destruct 100% Bond Pull	X	—	—
Quality Conformance (5005)	X	X	X
Group A (Each Lot/Sublot)	X	X	X
Group B (Each Lot)	X	X or Alt. B	X or Alt. B
Group C	X	X	X (Note 1)
Group D	X	X	X (Note 1)

(X Indicates Requirement)

NOTE

1. Shipment prior to completion of groups C, D, with customer approval.

MILITARY STANDARD PROCESS FLOWS

Screen	MIL-STD-883C		MIL-M-38510	
	Method	Requirement	Method	Requirement
Internal Visual (Precap)	2010 Condition B and 38510 /1	100%	2010 Condition B and 38510 /1	100%
Stabilization Bake	1008 24 hours minimum Condition C or equivalent /11	—	1008 24 hours minimum Condition C or equivalent /11	—
Temperature Cycling	1010 Condition C	100%	1010 Condition C	100%
Constant Acceleration	2001 Condition E (min.) in Y 1 Plane /2	100%	2001 Condition E (min.) in Y 1 Plane /2	100%
Seal Fine Leak	1014, Condition B /10	100%	1014, Condition B /10	100%
Seal Fluorocarbon Gross Leak	1014, Condition C3 /10	100%	1014, Condition C3 /10	100%
Interim Electrical	Per applicable device specification	Optional	JAN slash sheet electrical specification	Optional
Burn-In Test	1015 160 hours @ 125°C or equivalent /3	100%	1015 160 hours @ 125°C or equivalent /3	100%
Final Electrical Tests (A) Static Tests (1) 25°C (Subgroup 1, Table 1, 5005) /9 (2) Max & Min rated operating temperature (Subgroups 2 & 3, Table 1, 5005) (B) Dynamic Test or Switching Tests 25°C (Subgroup 4 or 9, Table 1, 5005) (C) Functional Test 25°C (Subgroup 7, Table 1, 5005)	Per applicable device specification	100% 100% 100% 100%	JAN slash sheet electrical specifications	100% 100% 100% 100%
Quality Conformance Inspection Group A (A) Static (1) 25°C (Subgroup 1) (2) Temperature (Subgroup 2 & 3) (B) Dynamic Test or Switching Tests (1) 25°C (Subgroup 4 or 9) (2) Temperature (Subgroup 5 & 6 or 10 & 11) (C) Functional (1) 25°C (Subgroup 7) or –55° & +125°C (Subgroup 8)	5005 Class B	/4	5005 Class B	/4
Group B	5005 Class B	/5	5005 Class B	/5
Group C	100%	/6 /8	5005 Class B	26 wks prod
Group D	5005 Class B	/7 /8	5005 Class B	36 wks pkg prod
External Visual	2009	100%	2009	100%

1/ Alternate screens per Paragraph 3.3 of Method 5004, MIL-STD-883 will be used on bipolar logic and memory product.
2/ For Packages with cavity perimeter of > 2 inches or a package mass > 5 grams, or per JAN slash sheet, lesser stress levels will be used.
3/ Burn-in time/temperature per Table 1 of Method 1015, MIL-STD-883. PDA per method 5004, MIL-STD-883.
4/ Sample size selection (for lots greater than 500 units) per 12MRM 03627A (sample sizes are greater than 2x of the requirement specified in Table 1 of Method 5005, MIL-STD-883 with the same acceptance level).
5/ Each package and lead finish for each lot of each assembly location.
6/ JAN generic data may be used. If JAN generic data is not available, Group C inspection shall be periodically performed per general provisions paragraph 1.2.1 of MIL-STD-883.
7/ Group D inspection shall be periodically performed per general provision paragraph 1.2.1. of MIL-STD-883 for each assembly location.
8/ Endpoint electrical endpoints for Group(s) C and D inspection shall be subgroups 1, 2, & 3 of the applicable device specifications.
9/ Lead Finish "A" applied after post burn-in electrical (A1) but before the final static electrical insertion.
10/ Fine and Gross leak may be performed anywhere between constant acceleration and external visual.
11/ This screen is preformed on Bipolar Analog devices only.

Note 1: When limits are available per applicable device specifications. For SSI Class B Devices, tests are performed as a part of Group C. For MSI and greater complexity Class B devices, tests are performed as a part of Group A.
Note 2: Sample size selection per Table 1 of Method 5005, MIL-STD-883 for microprocessor product.
Note 3: Electrical endpoints for Group(s) C and D inspection performed on microprocessor products shall be as a minimum subgroup 7, 8 (hot), 9, 10.
Note 4: Final Electrical tests performed on microprocessor product shall include subgroups 1, 2, 3, 7, 8, 9, 10 unless otherwise indicated in the applicable military drawing.
Note 5: Group A electrical tests performed on microprocessor product shall include subgroups 1, 2, 3, 7, 8, 9, 10 unless otherwise indicated in the applicable military drawing.

MILITARY PRODUCTS OPERATION
MEP PRODUCT FLOW

SCREENING AND QUALITY CONFORMANCE TESTING REQUIREMENTS
MOTOROLA ENHANCED PRODUCT

Operation	Methods	MEP 1	MEP 2	MEP 3
Assembly	Per appropriate commercial flow for each package type.	Each wafer visually sampled and sawn. The die are die bonded, wire bonded and sealed.		
Seal Fine and Gross	Method 1014 Conditions B and C	100%	100%	100%
Interim Electrical	Optional	Per The Applicable Military Electrical Specification		
Burn-in Test	1015 160 hours @ 125°C or equivalent	100%	100%	—
PIND	2020 Condition A	100%	—	—
Final Electrical Test	Jan Slash Sheet or SMD/DESC Dwg or Motorola Spec	Per The Applicable Military Electrical Specification		
(A) Static Test (1) 25°C (96 hr Req't and PDA Apply)	Subgroup 1, Table 1, 5005	100%	100%	100%
(2) Max and Min rated oper. temperatures	Subgroup 2 and 3 Table 1, 5005	100%	100%	100%
(B) Dynamic Test or Switching Test 25°C	Subgroup 4 or 9, Table 1, 5005	100%	100%	100%
(C) Functional Test 25°C	Subgroup 7, Table 1, 5005	100%	100%	100%
Quality Conformance Inspection:	QCI per 5005 Class B Table 1	The sample size/rejects allowed is 116/0 per 5005 for each sub-group or predefined set of subgroup (tests defined in appropriate Military device specification).		
Group A (A) Static Tests (1) 25°C (2) Max and Min rated oper. temperatures	Subgroup 1 Subgroup 2 and 3			
(B) Dynamic or Switching Tests (1) 25°C (2) Max and Min rated oper. temperatures	Subgroup 4 or 9 Subgroup 5 and 6 or 10 and 11			
(C) Functional Tests (1) 25°C	Subgroup 7			
Group B (B02, B03, B05)	5005 Class B	Each Inspection Lot (Except no B05 MEP 3)		
External Visual	2009	100%	100%	100%
Assembly/Test Location		Malaysia	Malaysia	Malaysia
Data		C of C	C of C	C of C

Motorola's MEP flow is designed specifically to meet shorter lead times associated with the design-in of new products in Military programs. The MEP flow is also ideal for Military and Industrial applications that do not require MIL-STD-883 product.

*MEP product processing is covered by general specification 12MRY01742.

MEP NUMBERING SYSTEM

Package	Device	Speed	Class	Process	Case	Lead Finish
1) Dual-In-Line (DIL)	Part Number	-XX	/EP	1, 2 or 3	(See Table)	(See Table)
2) Leadless Ceramic Chip Carrier (LCCC)	Part Number	-XXM**	/EP	1, 2 or 3	(See Table)	(See Table)
3) Ceramic Leaded Chip Carrier (CLCC)	Part Number	-XX	/EP	1, 2 or 3	(See Table)	(See Table)
4) Cerflat (FP)	Part Number	-XX	/EP	1, 2 or 3	(See Table)	(See Table)
5) Metal Can (CAN)	Part Number	-XX	/EP	1, 2 or 3	(See Table)	(See Table)
6) Pin Grid Array (PGA)	Part Number	-XX	/EP	1, 2 or 3	(See Table)	(See Table)

XX Applicable only on microprocessors and memories.

Case Outline Table

Letter	MIL-M-38510 Appendix C Designation	Description
A	F-1	14-lead FP (1/4" X 1/4")
B	F-3	14-lead FP (3/16" x 1/4")
C	D-1	14-lead DIL (1/4" x 3/4")
D	F-2	14-lead FP (1/4" x 3/8")
E	D-2	16-lead DIL (1/4" x 7/8")
F	F-5	16-lead FP (1/4" x 3/8")
G	A-1	8-lead CAN
H	F-4	10-lead FP (1/4" x 1/4")
I	A-2	10-lead CAN
J	D-3	24-lead DIL (1/2" x 1-1/4")
K	F-6	24-lead FP (3/8" x 5/8")
L	D-9	24-lead DIL (1/4" x 1-1/4")
M	A-3	12-lead CAN
*N		Unassigned by Motorola
P	D-4	8-lead DIL (1/4" x 3/8")
Q	D-5	40-lead DIL (9/16" x 2-1/16")
R	D-8	20-lead DIL (1/4" x 1-1/16")
S	F-9	20-lead FP (1/4" x 1/2")
*T		Unassigned by Motorola
*T		SMD/JAN — See detail dwg.
*U		LCCC for Motorola 883C
*U		SMD/JAN — See detail dwg.
V	D-6	18-lead DIL (1/4" x 15/16")
W	D-7	22-lead DIL (3/8" x 1-1/8")
*X		DIL for Motorola 883C
*X		SMD/JAN — See detail dwg.
*Y		FP for Motorola 883C
*Z		All other Motorola 883C configurations
*Z		SMD/JAN — See detail dwg.
2	C-2**	20-Terminal SQ. LCCC (.350" x 350")
3	C-4	28-Terminal SQ. LCCC (.450" x 450")

*Undesignated in MIL-M-38510 Appendix C.

****Motorola Case Outline Table**

M = Motorola designation for the 75 MIL Multi-Layer Leadless Chip Carrier, (Meets C2a Designation Criteria).

Maximum height dimension 0.075 inches.

Lead Finish

A-Kovar or Alloy 42, with hot solder dip
B-Kovar or Alloy 42, with fused matte tin plate
C-Kovar, Alloy 42, or Co-Fired, with gold plate
X-Any of above, for ordering purposes only.

Check with your local Motorola representative for price and delivery.

100% Processing Requirements for JANTX, JANTXV and JANS Products

Inspections and tests must be performed in the order specified.

Subgroup Screen	MIL-STD-750 Test Method	JANTX	JANTXV	JANS
Internal Visual	2072/3/4	N/A	100%	100%
High Temperature Storage	1032	100%	100%	100%
Thermal Shock	1051	100%	100%	100%
Constant Acceleration	2006	100%	100%	100%
P.I.N.D.	2052	N/A	N/A	100%
Instability Shock (Diodes only)				
FIST	2081	N/A	N/A	100%
BIST	2082	N/A	N/A	100%
Hermetically	1071	100%	100%	100%
Serialization	—	N/A	N/A	100%
Electricals, Read & Record		Go/No-Go	Go/No-Go	100%
H.T.R.B.				
Transistors	1039	100%	100%	100%
Diodes	1038	100%	100%	100%
Electricals, Read & Record		100%	100%	100%
Power Burn-In				
Transistors	1039	160 Hrs	160 Hrs	240 Hrs
Diodes	1038	96 Hrs	96 Hrs	240 Hrs
Thyristors	1040	96 Hrs	96 Hrs	140 Hrs
Electricals, Detail Spec		100%	100%	100%
Deltas, within 96 Hrs		100%	100%	100%
Hermetically	1071	Optional	Optional	100%
X-Ray	2076	N/A	N/A	100%
External Visual	2071	N/A	N/A	100%

The above tests shall be followed by Group A, B, and C tests on a sample basis.
N/A = Not Applicable

Military Semiconductor
Integrated Circuits

Process Flows: Certificate of Compliance

"The following policy change refers to the Military Integrated Circuit Products only"

We have recently designed and implemented a new and improved data information packet to be shipped with each lot. It is much more concise, easier to understand, and clearer in format than the bulky, complicated report we previously provided. The reverse side of this notice is more generic in nature, but provides the "essentials" in terms of lot identification, military methods utilized for processing, and a clear summarization of the different steps the product goes through prior to shipment. Also on the same form is the required certificate of compliance.

We understand that for a very small percentage of customers who have specific attribute data requirements imposed on them by contract, this lot data may be insufficient. In those limited cases, we will be happy to research the records and provide "supplementary" data which consists of more specific lot history on Groups A, B, C and D and any extra processing which may have been completed. We will charge only $300.00 per shipment for this additional information effective January 1, 1990 and will require a separate line item entry.

Preliminary inputs that we have received from our customers and the sales field have been very positive. Our cycle time, administrative quality and overall customer responsiveness will be improved as a result. For further information please contact your local sales office or the Military Service Center at 1-800-521-6274.

Military Semiconductor Integrated Circuits

Process Flows: Certificate of Compliance

LOT DATA
&
CERTIFICATE OF COMPLIANCE

MOTOROLA P/N:	***JM38510/30402BCA***	CUSTOMER P/N:	***990-3525-064***
CUSTOMER NAME:	***T.C.S. CORP.***	FACTORY ORDER #:	***441019***
		PO. NUMBER:	***INLE-2789-707***
		TOTAL QTY:	***10000***

T.C.S. CORP.
PRODUCTION AVENUE
TEMPE, AZ 85284

LOT NO	SEAL D/C	WARRANTY D/C	REWARRANTY D/C	QUANTITY
R98084A	***KK8917***	***9030***	***9330***	***10000***

IT IS HEREBY CERTIFIED THAT ALL ARTICLES LISTED ABOVE ARE IN THE QUANTITIES SHOWN AND ARE IN COMPLIANCE WITH ALL OF THE SCREENING AND QUALITY CONFORMANCE INSPECTION REQUIREMENTS OF MIL-M-38510, MIL-STD-883 (PARA 1.2.1 FOR SMD AND JEDEC PRODUCTS) AND THE APPLICABLE DETAIL SPECIFICATIONS. RECORDS OF TRACEABILITY, INSPECTION, AND TEST PROVIDING OBJECTIVE EVIDENCE OF THE FOREGOING ARE ON FILE AT MOTOROLA AND ARE AVAILABLE UPON REQUEST.

____
QUALITY ASSURANCE INSPECTOR

DATE: ____________________________

Military Semiconductor Integrated Circuits

Process Flows: Certificate of Compliance

SCREENING AND INSPECTION REQUIREMENTS FOR MOTOROLA'S JAN/SMD/JEDEC PROGRAMS

OPERATION	100% SCREENING PER METHOD 5004, MIL-STD-883C, LEVEL B:
INTERNAL VISUAL	METHOD 2010 CONDITION B AND PARA. 3.3.1 OF M5004, SEE NOTE 1
TEMPERATURE CYCLING	METHOD 1010, CONDITION C: 10 OR 50 CYCLES (–65°C TO 150°C), SEE NOTE 1
CONSTANT ACCELERATION	METHOD 2001, Y1 AXIS ONLY: SEE NOTE 2 FOR TEST CONDITIONS
FINE LEAK	METHOD 1014 CONDITION B
GROSS LEAK	METHOD 1014, CONDITION C
BURN-IN	METHOD 1015, CONDITION A, C OR D; 160 HRS @ +125°C (OR EQUIVALENT)
FINAL ELECTRICAL	THE FOLLOWING ELECTRICAL SUBGROUPS ARE TESTED PER THE APPLICABLE SPECIFICATION: • SUBGROUPS 1, 4, 7 AND/OR 9 (+25°C SCREENING PER NOTE 3). • SUBGROUPS 2, 5, 8 AND/OR 10 (+125°C SCREENING PER NOTE 3). • SUBGROUPS 3, 6, 8 AND/OR 11 (–55°C SCREENING PER NOTE 3).

QCI OPERATION	QUALITY CONFORMANCE INSPECTION PER METHOD 5005, MIL-STD-883C, LEVEL B: NOTE 4
GROUP A	**PERFORMED ON EACH LOT (& BURN-IN PARTIAL) PER PARA. 3.5.1:** • SAMPLE SIZE ≥116/0
GROUP B	**PERFORMED ON EACH LOT (& BURN-IN PARTIAL) PER TABLE IIb:** • RESISTANCE TO SOLVENTS, METHOD 2015: SAMPLE SIZE = 4/0. • SOLDERABILITY, METHOD 2003 (@ 245 ± 5°C): LTPD/ACC# = 10/0 minimum. • BOND STRENGTH, METHOD 2011, CONDITION D: LTPD/ACC# = 15/0.
GROUP C	**PERFORMED PERIODICALLY (SEE NOTE 5) PER TABLE III, ON THE MOST COMPLEX DEVICE TYPE FROM EACH MICROCIRCUIT GROUP:** • STEADY-STATE LIFE TEST PER METHOD 1005, COND. A, C OR D FOR 1000 HRS. @ +125°C (OR EQUIVALENT) WITH LTPD/ACC# = 5/2
GROUP D	**PERFORMED PERIODICALLY (SEE NOTE 6), PER TABLE IV, ON EACH PACKAGE TYPE:** • SUBG. 1: PHYSICAL DIMENSIONS (M2016) WITH LTPD/ACC# = 15/0. • SUBG. 2: LEAD INTEGRITY (M2004, CONDITION B2) WITH SEAL ENDPOINTS (M1014, COND. B & C) WITH LTPD/ACC# = 15/0 • SUBG. 3: THERMAL SHOCK (M1011, COND B, 15 CYCLES), TEMP. CYCLE (M1010, COND. C, 100 CYCLES), MOISTURE RESISTANCE (M1004) WITH SEAL (M1014, COND. B & C), VISUAL (CRITERIA PER M1004), AND ELECTRICAL (PER THE APPLICABLE DETAIL SPEC.) ENDPOINTS. LTPD/ACC# = 15/0. • SUBG. 4: MECH. SHOCK (M2002, COND. B), VAR. FREQ. VIBRATION (M2007, COND. A), CONSTANT ACCELERATION (M2001, SEE NOTE 2 FOR TEST COND.) WITH SEAL (M1014, COND. B & C), VISUAL (CRITERIA PER M1004), AND ELECTRICAL (PER THE APPLICABLE DETAIL SPEC.) ENDPOINTS. LTPD/AC# =15/0. • SUBG. 5:SALT ATMOSPHERE (M1009, COND. C) WITH SEAL (M1014, COND. B & C), VISUAL (CRITERIA PER M1009) ENDPOINTS. SAMPLE SIZE = 15/0. • SUBG. 6: INTERNAL WATER-VAPOR CONTENT (M1018, 5K PPM MAX @ 100°C), SAMPLE SIZE = 3/0 OR 5/1. • SUBG. 7: ADHESION OF LEAD FINISH (M2025) WITH SAMPLE SIZE = 15/0. • SUBG. 8: LID TORQUE (M2024) WITH SAMPLE SIZE = 5/0.

NOTES:

1. • ALL BIPOLAR LOGIC PRODUCT RECEIVES 100% VISUAL INSPECTION PER M2010, CONDITION B AND THE ALTERNATE CRITERIA SPECIFIED IN PARA. 3.3.1 OF M5004, WHICH SPECIFIES THE FOLLOWING ADDITIONAL REQUIREMENTS: 50 TEMPERATURE CYCLES (IN LIEU OF THE SPECIFIED 10 CYCLES) AND SPECIAL ELECTRICAL SCREENING TESTS AS DEFINED BY PARA. 3.3.2 (SCREENING SHALL BE PERFORMED DURING THE 100% ELECTRICAL PROBE TEST AT THE WAFER LEVEL).
   • ALL OTHER PRODUCT RECEIVE THE NORMAL M2010 VISUAL INSPECTION AND 10 TEMPERATURE CYCLES.
2. STANDARD TEST CONDITION IS E (30KG's); HOWEVER, IF THE PACKAGE HAS AN INNER SEAL OR CAVITY PERIMETER OF 2 INCHES OR MORE IN TOTAL LENGTH, OR WHICH HAVE A PACKAGE MASS OF 5 OR MORE GRAMS, THE PRODUCT WILL BE SCREENED (OR TESTED) AT 20KG's, EXCEPT FOR THE T03 PACKAGE, WHICH IS SCREENED (OR TESTED) AT 10KG's (PER THE JAN SLASH SHEET).
3. THE ELECTRICAL SUBGROUPS TESTED SHALL BE AS SPECIFIED IN THE APPLICABLE DETAIL SPECIFICATION.
4. THE SAMPLE SIZE INCLUDES THE ACCEPTANCE CRITERIA AS FOLLOWS: "SAMPLE SIZE = 4/0" INDICATES THAT THE SAMPLE SIZE IS 4 UNITS AND THAT THE ACCEPTANCE LEVEL IS ZERO REJECTS.
5. GROUP C PERIODICAL TESTING: JAN: ONCE EVERY QUARTER; SMD/JEDEC: ONCE EVERY FOURTH QUARTER.
6. GROUP D PERIODICAL TESTING: JAN: ONCE EVERY 26 WEEKS; SMD/JEDEC: ONCE EVERY 52 WEEKS.
7. ALL TESTING IS PERFORMED ON A "GO/NO GO" BASIS.

Military Semiconductor Integrated Circuits

Manufacturing, Quality & Test

Manufacturing

Manufacturing Excellence is one of the six key "Sector Imperative" goals all Motorolans strive to achieve. Our objective is to combine advanced technological processes and talented problem-solving, goal oriented individuals to create world class products.

Our diverse product portfolio demands are satisfied by dedicated, certified fabrication facilities around the world:

Bipolar I	Mesa, AZ
Bipolar II	Mesa, AZ
Bipolar III	Mesa, AZ
Lansdale	Santa Monica, CA
MOS I	EKB, Scotland
MOS II	Austin, TX
MOS III	Austin, TX
MOS V	Mesa, AZ
MOS VI	Mesa, AZ

Our newest and most sophisticated fabrication facility is MOS 6 in Mesa, Arizona. It includes 28,000 square feet of clean rooms providing better than Class 10 conditions.

We are already achieving one micron integrated circuit dimensions on six-inch CMOS wafers. This facility is primarily dedicated to the fabrication of memories and ASIC's.

Our assembly facilities accommodate both on-shore and off-shore manufacturing and market demands. Our in-house facility in Tempe, AZ is certified to JAN and MIL-STD-883 requirements. While our off-shore facilities in Kuala Lumpur, Malaysia and Seoul, Korea are both 883C certified. Internal self-audits and inspections by DESC, Underwriters Labs and various customers are conducted regularly to insure compliance to Motorola and Military requirements.

Quality

Motorola was one of the first semiconductor manufacturers to realize the importance of product, process and administrative quality in reducing cost, eliminating non-value added activity, improving productivity and ultimately, satisfying our customers.

Ten and hundred-fold improvement programs were implemented and goals achieved. Average outgoing quality levels for both electrical and visual-mechanical inspection are consistently less than 50 parts per million (PPM) in the military products operation and major efforts are in place to reduce the number further. Our goal in fact is to achieve Six Sigma quality (3.4 PPM) by 1992.

To do this requires implementation of statistical process control (SPC) in all critical processes, continuing to reduce opportunities for error through improved manufacturing and administrative systems and implementation of continuous improvement programs by our cross-functional involvement teams. The result will be "Total Customer Satisfaction."

Test

Motorola's Military Products Operation (MPO) utilizes state-of-the-art VLSI testers to test high-frequency, large pin count devices, (currently to 256 leads). Also, in order to increase our quality standards and to simplify our testing procedures we test most MPO products to JAN level test programs. The benefit to our customers is obvious: the best available test programs yield the best available product for our customers.

Military Semiconductor Integrated Circuits

Manufacturing, Quality & Test

Certified Facilities

Our broad MIL-STD-883C and MIL-M-38510 certified resource base, domestic and off-shore, guarantees our customers product support from a variety of manufacturing, assembly and test facilities. Our 883C facilities are audited and certified to MIL-STD-38510 specification (qualification excluded). The Foundation of Standard Military Product is the basis for program administration (JAN and/or 883C). The following tables expand on our production capabilities.

MIL-M-38510 CERTIFIED FACILITIES					
Technology	**Wafer Fab**	**Assembly**	**Burn-In**	**Test**	**QCI**
Linear	Bipolar-1/Mesa, AZ	MPO/Tempe, AZ	MPO/Tempe, AZ	MPO/Tempe, AZ	MPO/Tempe, AZ
LS/MECL10K	Bipolar-2/Mesa, AZ	MPO/Tempe, AZ	MPO/Tempe, AZ	MPO/Tempe, AZ	MPO/Tempe, AZ
FAST/Memory	Bipolar-2/Mesa, AZ	MPO/Temp, AZ	MPO/Tempe, AZ	MPO/Tempe, AZ	MPO/Tempe, AZ
HCMOS Logic	MOS-2/Austin, TX	MPO/Tempe, AZ	MPO/Tempe, AZ	MPO/Tempe, AZ	MPO/Tempe, AZ

MIL-STD-883C CERTIFIED FACILITIES					
Technology	**Wafer Fab**	**Assembly**	**Burn-In**	**Test**	**QCI**
Linear	Bipolar-1/Mesa, AZ	Malaysia, Korea	Malaysia, Korea, Tempe, AZ	Malaysia, Korea, Tempe, AZ	Malaysia, Korea, Tempe, AZ
LS/MECL 10K	Bipolar-2/Mesa, AZ	Malaysia	Malaysia, Tempe, AZ	Malaysia, Tempe, AZ	Malaysia, Tempe, AZ
MECL 10KH	Bipolar-2/Mesa, AZ	Malaysia	Malaysia, Tempe, AZ	Malaysia, Tempe, AZ	Malaysia, Tempe, AZ
FAST/DRAM	Bipolar-2/Mesa, AZ	Malaysia	Malaysia, Tempe, AZ	Malaysia, Tempe, AZ	Malaysia, Tempe, AZ
FACT	MOS-2/Austin, TX	Malaysia	Malaysia, Tempe, AZ	Malaysia, Tempe, AZ	Malaysia, Tempe, AZ
CMOS Logic	MOS-1/Scotland	Malaysia	Malaysia, Tempe, AZ	Malaysia, Tempe, AZ	Malaysia, Tempe, AZ
HCMOS Logic	MOS-2/Mesa, AZ	Malaysia	Malaysia, Tempe, AZ	Malaysia, Tempe, AZ	Malaysia, Tempe, AZ
MPU-6800	MOS-3/Austin, TX	Malaysia	Tempe, AZ	Tempe, AZ	Tempe, AZ
MPU-88000	MOS-5/Mesa, AZ	Malaysia	Tempe, AZ	Tempe, AZ	Tempe, AZ
68020/68030	MOS-8/Austin, TX	Malaysia	Tempe, AZ	Tempe, AZ	Tempe, AZ
SRAM	MOS-8/Austin, TX	Malaysia	Tempe, AZ	Tempe, AZ	Tempe, AZ

Process Flow Quality Ratings

Our wide range of certified manufacturing, assembly and test areas offer our customers several different levels of screening and qualification: JAN, SMD/DESC, 883C and MEP (Motorola Enhanced Product). The table below illustrates the variety of processes available to our customers.*

Motorola Process	Quality Level	Process Description	Quality Factor π Q
None	S	Procured in full accordance with MIL-M-38510 Class S requirements. Class S listing on QPL-38510.	0.25
None	S-1	Procured in full compliance with the requirements of MIL-STD-975 or MIL-STD-1547 and have procuring activity specification approval.	0.75
Motorola Quasi "S"	S-2	Procured in full compliance with Motorola Document 12MRM51815A.	0.8 (EST)
MIL-M-38510	B	Procured in full accordance with MIL-M-38510 Class B Requirements. Class B listing on QPL-38510.	1.0
SMD/DESC	B-1	Fully compliant with all requirements of Paragraph 1.2.1 of MIL-STD-883 and procured to a Military or DESC Drawing or other approved documentation.	2.0
MIL-STD-883C**	B-1	Fully compliant with requirements of Paragraph 1.2.1 MIL-STD-883C and procured to approved documentation including vendor's equivalent Class B requirements.	2.0
MEP, Quasi S	D	Hermetically sealed parts with normal reliability screening and manufacturer's quality assurance practices.	10.0
Commercial	D-1	Commercial (non-military) flow	20.0

Federal Supply Commission Manufacturing Number (FSCM#)
For reference purposes, Motorola's FSCM# is 04713
* Reference Table 5.1.2.7-1 MIL HNBK217E
** Motorola's 883 flow is identical to the SMD/DESC requirements and is fully compliant to MIL-STD-883 but may be electrically tested to a JAN/SMD/DESC drawing or to a Motorola drawing as indicated in the test program column in the 883 section. For most standard device types, the 883C version is identical to the SMD/DESC version.

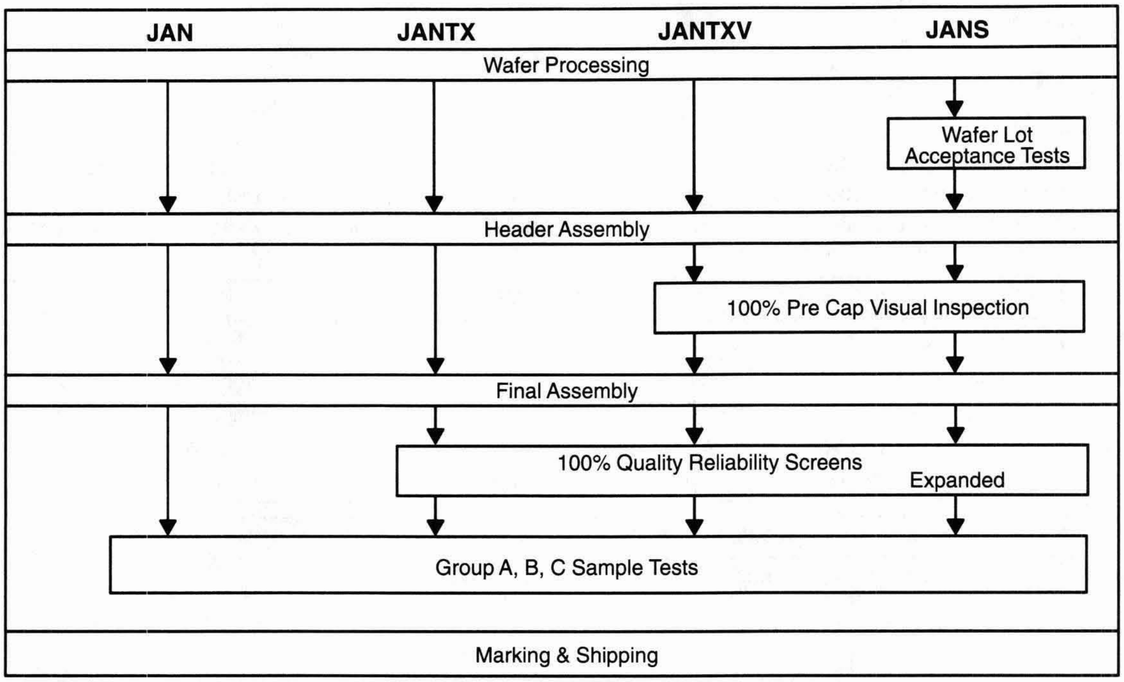

The MIL-S-19500 Semiconductor Process Flow

MIL-Qualified Semiconductors

MIL-type semiconductors are high reliability components that exhibit long product life under severe operating conditions. They are specified for use in most complex systems supplied to the military market and utilized extensively to provide the required accuracy for today's missile systems and the long operational life demanded by spacecraft. To ensure optimum component reliability, the Department of Defense has established a complex system of Specifications and Standards involving all phases of manufacturing, including Facility Certification as well as Product Processing, Testing and Screening. A manufacturer of MIL-Qualified components must rigidly conform to these standards throughout all worldwide facilities.

THE MIL-S-19500 SPECIFICATION

To ensure compliance with the requirements, the Department of Defense controls the procurement of semiconductor devices used in military equipment through a general specification, MIL-S-19500. (The latest revision of this specification is MIL-S-19500H, dated April 30, 1990.) This is maintained by the Department of the Navy but is approved for use by all departments and agencies of the Department of Defense and their military OEM subcontractors. It covers the basic requirements for the manufacture of MIL-Qualified semiconductor devices and through a series of associated "Methods documents" (MIL-STD-750) it prescribes the detailed procedures for satisfying these requirements.

The MIL-S-19500 "Methods" Compendium

MIL-S-19491	Packaging of Semiconductors
FED-STD-209	Clean Room, Work Stations, Controlled Environments
FED-STD-H28	Screw-Thread Standards
MIL-STD-105	Sampling Procedures
MIL-STD-129	Marking for Shipment Storage
MIL-STD-750	Test Methods for Semiconductors
MIL-STD-45662	Calibration Systems Requirements

THE JAN PROGRESSION

Test methods for semiconductor devices are detailed in MIL-STD-750 which covers qualification procedures for four successively higher levels of quality assurance: JAN, JANTX, JANTXV and JANS.

The term "JAN" is a U.S. Government Certification Mark, registered by the U.S. Patent Office as number 504860, and its assignment to a specific product signifies:

— Manufacturer has complied with all requirements for the manufacture of MIL-type components.

— Product has satisfied all the applicable test requirements.

— Test data will remain on file for at least three years.

— Data will be available for on-sight review by government representatives upon request.

— That JAN data is available and may be obtained from the supplier.

A simplified production flow chart for each of the four JAN levels, including the applicable tests and screens, is shown in the illustration.

JAN Products

JAN was the initial government classification for products requiring special reliability assurances. It signifies that the products so classified are taken from a controlled and isolated lot (or batch) of devices, and that samples from this lot have satisfactorily passed the ascribed electrical, thermal, mechanical, environmental, life and storage requirements in accordance with the associated Slash Sheet(1). If the sample lot has passed the specified statistical criteria, the entire lot is qualified as JAN, and all devices in the lot may be marked accordingly.

JANTX Products

With increasing system complexity came the need for a reduction in the number of defective devices per lot and for a longer "Mean Time Between Failures" (MTBF). This led to the JANTX (JTX) specification and to the concept of 100% screening. This involves subjecting all devices in the proposed qualification lot to a stringent program of stress tests that must precede the sample tests associated with conventional JAN processing. These tests seek to weed out potential failures, as well as those that might pass undetected in JAN lots where only samples of the lot are investigated.

JANTXV Products

JANTXV (JTXV) testing is essentially the same as JTX, except that the JTXV products undergo an additional 100% Precap Visual inspection. Visual screening procedures involve microscopic inspection of the semiconductor assembly, before capping the package, to uncover potential failures due to chip imperfection or imperfect die or wire bonds. While the U.S. government has qualified off-shore facilities for the assembly of JAN and JANTX devices, JANTXV products must be manufactured in the U.S. due to the visual precap inspection requirement. One exception to this is a clear-glass-encapsulated diode line which can be inspected after assembly.

JANS Products

In the early '70s, developments in the aerospace industry dictated the accommodation of more hostile operating environments as well as extended MTBF demands. This helped drive the concept of wafer lot acceptance(2) prior to encapsulation, and spurred additional and even tighter 100% test limits after encapsulation. The resulting JANS specification reflects the most critical test sequence in effect today.

JAN QUALIFICATION TESTS AND PROCEDURES

The initial set of slash-sheet-prescribed sample tests associated with the JAN qualification consists of three separate groups. These were developed to:

1. Verify conformance to electrical specifications. (Group A)
2. Assure manufacturing integrity and reliability in tactical and ground support applications. (Group B)
3. Provide evidence of long-term reliability under harsh environmental conditions where severe mechanical and life/environmental stresses exist (Group C).

Group A Testing								
Type of Test	Vis/Mech	Electrical						
Test Subgroups	A1	A2	A3	A4	A5	A6	A7
		DC Tests	Hi/Lo Temp	AC Tests	SOA Tests	Current Surge	Selected
Test Parameters	Package: Dimensions Marking	$V_{(BR)CBO}$ $V_{(BR)CEO}$ $V_{(BR)EBO}$ I_{CBO} I_{EBO} $V_{BE(sat)}$* $V_{CE(sat)}$* h_{FE}	I_{CBO} @ 150°C h_{FE} @ –55°C	$\lvert h_{fe}\rvert$ h_{fe} C_{obo} C_{ibo} NF* t_{on} t_{off}	SOA @ 25°C* Power Transistors	Diodes Rectifiers	As Specified

* These parameters are tested under two or more operating conditions.

Notes:

(1) A slash sheet is a numbered document describing the detailed characteristics of each individual semiconductor product. It is so called because each specific document number is appended to MIL-S-19500 by a "/" (slash), e.g. MIL-S-19500/135

(2) Wafer lot acceptance involves detailed documentation and verification of the selection and processing of wafers destined for JANS qualification, including specification of sample size, control of wafer thickness, cleanliness, junction and surface preparation, metal deposition and thickness, etching, alloying and other processing steps.

Group A tests consist of visual, mechanical and electrical tests that verify "form, fit and function" of a particular group of devices. The procedure begins with the selection of a representative sample from a MIL-designated lot that has been fully processed. The sample is subjected to a test sequence that begins with a visual and mechanical inspection per MIL-STD-750 (subgroup A1), followed by a comprehensive series of electrical tests (subgroups A2 through Ax). The number of subgroups in the electrical test sequence may vary considerably, depending on the nature of the device and its potential applications. The test sequence shown depicts the procedure for a 2N3498 transistor.

The visual/mechanical inspection for the Group A tests are performed in accordance with MIL-STD-750, METHOD 2071. It consists of a sample (LTPD = 5) which are examined to determine that the devices meet the applicable materials, design, construction, marking and workmanship standards.

A typical electrical test sequence begins with the verification of the major DC parameters of the device operating under normal (25°C) temperature conditions, Subgroup A2. Usually this is followed by testing a sample of several parameters at either high and/or low temperature limits to verify satisfactory performance over the entire temperature range for which it is specified, Subgroup A3. Then the AC (dynamic) parameters are investigated (Subgroup A4). For power transistors, the Safe Operating Area (SOA) is verified (Subgroup A5). Surge current for diodes and rectifiers is tested in Subgroup A6. Finally, Subgroup A7 provides for tests that are unique to certain products but do not fit into a general classification.

Successful completion of this test sequence provides assurance that the devices are capable of operating in accordance with their design parameters.

Group B Testing

Test Subgroups	**B1**	**B2***	**B3***	**B4**	**B5**	**B6***
Type of Test	Solderability	Thermal Shock	Steady State Operating Life	Decap Visual	Thermal Resistance	High Temp Life (non-operating)
	Resistance to Solvents	Surge	Intermittent	SEM when specified		
		Hermetic Seal	Operation Life	Bond Strength		
		Fine	Blocking Life			
		Gross				

* The tests in this subgroup are preceded and followed by electrical tests of the most susceptible parameters — h_{FE}, I_{CBO}, $V_{CE(sat)}$ and $V_{BE(sat)}$.

Group C Testing

Test Subgroups	**C1**	**C2***	**C3***	**C4**	**C5**	**C6**
Type of Test	Physical	Thermal Shock	Mech. Shock	Salt	Not	Steady State or Intermittent or Blocking
	Dimensions	(Glass Strain)	Vibration (Variable Freq.)	Atmosphere	Applicable	Operation Life
		Terminal	Constant Acceleration			
		Strength				
		Hermetic Seal				
		Moisture				
		Resistance				

* The tests in this subgroup are preceded and followed by electrical tests of the most susceptible parameters — h_{FE}, I_{CBO}, $V_{CE(sat)}$ and $V_{BE(sat)}$.

This sequence includes screens that are intended to verify that the devices are mechanically sound and that they can be expected to continue to operate satisfactorily over time and under adverse operating conditions. Since a number of these screens involve stress factors that could result in ultimate performance degradation, the electrical parameters expected to be affected are tested before and after the applied screen to ascertain that the performance change remains within prescribed limits. Group B tests are run on a lot by lot basis.

Group C tests must be performed on samples from the initial lot as well as on samples from subsequent lots formed at six-month periodic intervals. These tests consist of mechanical, environmental and life tests intended to provide assurance that the devices will continue to perform reliably in long term harsh environments where severe mechanical and life/environmental stresses exist.

JANTX, TXV, JANS QUALIFICATION — 100% PROCESSING

Higher levels of reliability assurance require more extensive and more elaborate reliability test procedures. For these, the sample tests for JAN devices have been supplemented with the processing screens described in the table on the following page. These screens are performed immediately after lot identification, prior to the Group A, B, and C sample tests. They are applied to 100% of the devices in the lot and include procedures developed to eliminate any marginal devices that would pass all normal operational tests but might fail under hostile environmental conditions. The most comprehensive screening procedure applies to the JANS classification which not only demands the greatest number of tests and screens after header assembly, but imposes Wafer Lot Acceptance criteria as well.

Military Semiconductor Integrated Circuits

Packaging and Mechanical Data

Military Products Operation Integrated Circuits Packages

MPO products are offered in several application specific and cost effective hermetically sealed ceramic packages. Our packages conform to the mechanical requirements of Appendix C of MIL-M-38510. We offer our products in the following ceramic packages: Dual In-Line package (DIL), solder seal Dual In-Line (Side Brazed DIL), ceramic FlatPack (FP or CERFLAT), Leadless Ceramic Chip Carrier (LCCC), Ceramic Leaded Chip Carrier (CLCC), several metal can packages (CAN) and Pin Grid Array (PGA).

All MPO packages are offered in a variety of pin patterns and lead finishes. The following pages will help you determine the proper combination of package, pin count and lead finish for your specific application. For your convenience, we have also included a "Supplier Package Cross Reference" which will help you cross other suppliers packaging codes to Motorola package codes.

DIL (Dual In-Line)

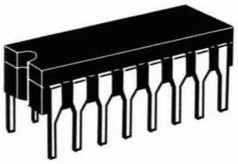

FP (Flat Pack)

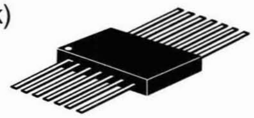

LCCC (Leadless Ceramic Chip Carrier)

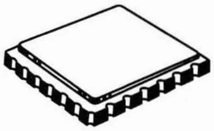

(CLCC) Ceramic Leaded Chip Carrier

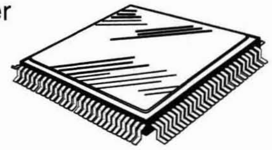

CAN (All Can Packages)

TO-3

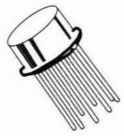

TO-5

PGA (Pin Grid Array)

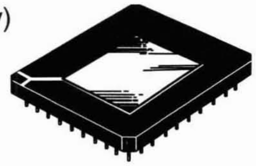

Military Semiconductor Integrated Circuits

Supplier Package Index

Motorola		JAN/SMD		National		TI		Harris		SGS		AMD		Signetics	
2	20-LCCC	2	20-LCCC	D	DIP	FD	LCCC	0	Chip Form	C	DIL	2	20-LCCC	C	DIL
3	28-LCCC	3	28-LCCC	E	LCCC	FE	LCCC	1	DIP	D	DIL	3	28-LCCC	EC	TO-46
A	14-FP	A	14-FP	F	Flat Pack	FG	LCCC	2	CAN	DG	DIL	A	14-FP	EE	TO-72
B	14-FP	B	14-FP	G	TO-8	FJ	CLCC	4	LCCC	E	LCCC	B	14-FP	F	CERDIL
C	14-DIL	C	14-DIP	H	CAN	FK	LCCC	5	Substrate	F	FP	C	14-DIP	FA	DIL
D	14-FP	D	14-FP	H-05	TO-5	FT	Flat Pack	7	Mini DIP	GC	LCCC	D	14-FP	FE	8-DIL
E	16-DIL	E	16-DIP	H-46	TO-46	FV	LCCC	9	Flat Pack	H	CAN	E	16-DIP	G	LCCC
F	16-FP	F	16-FP	J-14	14-DIP	GB	68-PGA	1B	Brazed Seal	J	883 DIL	F	16-FP	GA	LCCC
G	8-CAN	G	8-CAN	J-8	8-DIP	HA	Quad FP	1B	SB DIP	K	TO-3	G	8-CAN	H	TO-5
H	12-FP	H	10-FP	K	TO-3	HB	Quad FP	A	TO-237	R	PGA	H	10-FP	I	DIL
I	12-CAN	I	10-CAN	K-Steel	TO-3 Stl	J	DIP	C	TO-220	T	PGA	I	10-CAN	K	TO-3
J	24-DIL	J	24-DIP	KC	TO-3 Al	JD	SB DIP	D	DIP	T	TO-220	J	24-DIP	L	CLCC
K	24-FP	K	24-FP	L	LCCC	JG	DIP	E	TO-8	W	CLCC	K	24-FP	P	PGA
L	24-DIL	L	24-DIP	P	TO-202	JT	DIP	F	FP	Y	DIL	L	24-DIP	Q	Flat Pack
M	12-CAN	M	12-CAN	Q	CerDIP UV	KC	TO-220	H	TO-66	Z	LCCC	M	12-CAN	R	Beryllia FP
P	8-DIL	P	8-DIP	U	PGA	KH	TO-220	I	16 Hybrid DIP			P	8-DIP	TA	TO-5
Q	42-DIL	Q	40-DIP	W	FP	KV	TO-220	J	CERDIP			Q	40-DIP	W	Flat Pack
R	20-DIL	R	20-DIP	Z	TO-92	L	Metal Can	K	TO-3			R	20-DIP	W	CERPAC
S	20-FP	S	20-FP			LD	Metal Can	L	LCCC			S	20-DIP	Y	FP w/ Radial Lds
						LP	TO-226A	S	TO-52			U	LCCC		
						RA	Flat Pack	T	TO-5			V	18-DIP		
U	LCCC	V	18-DIP			U	Flat Pack	U	TO-72			W	22-DIP		
V	18-DIL	W	22-DIP			W	Flat Pack	V	TO-39			X	DIP		
W	22-DIL					WA	Flat Pack	Z	TO-92			Y	Other		
X	DIL					WC	Flat Pack					Z	Other		
Y	CLCC														
Z	other							**RCA/GE**							
								1	Modified Class S						
								3	Modified Class B						
								3w	Modified Class B						

CAN	Any Metal Can Package
CLCC	Ceramic Leaded Chip Carrier
DIL	Dual In-Line Package
DIP	Dual In-Line Package
FP	Flat Pack
LCCC	Leadless Ceramic Chip Carrier
PGA	Pin Grid Array
SB	Sidebraze package
Stl	Steel package

Military Semiconductor Integrated Circuits

Device Nomenclature

MIL-M-38510 (JAN)

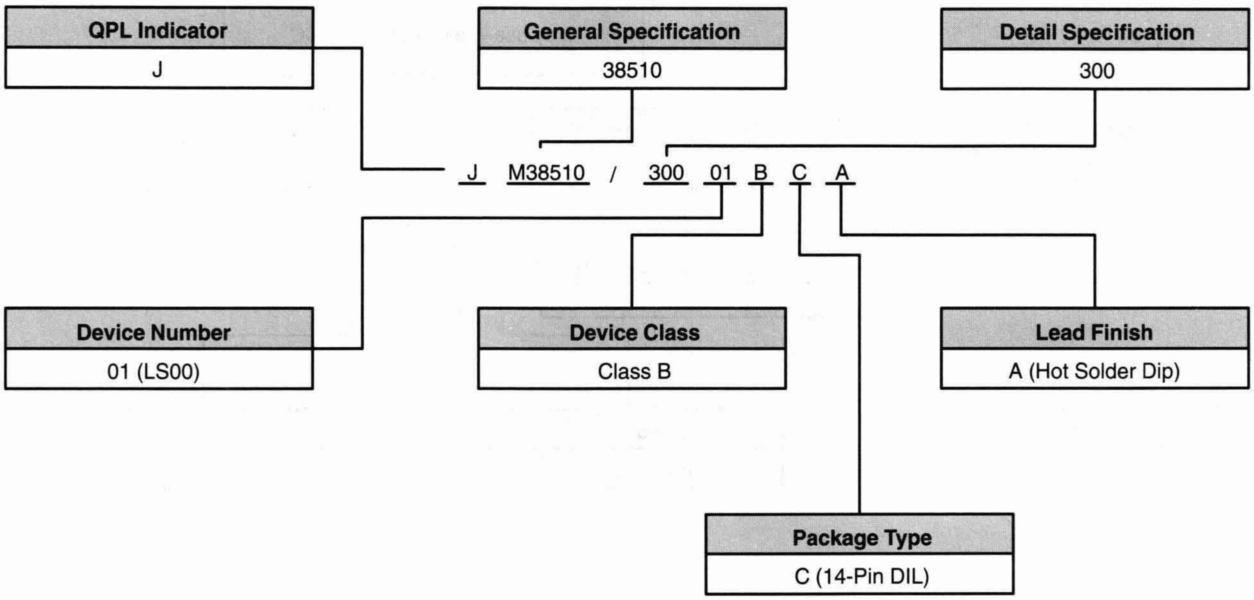

Standard Military Drawing SMD/DESC

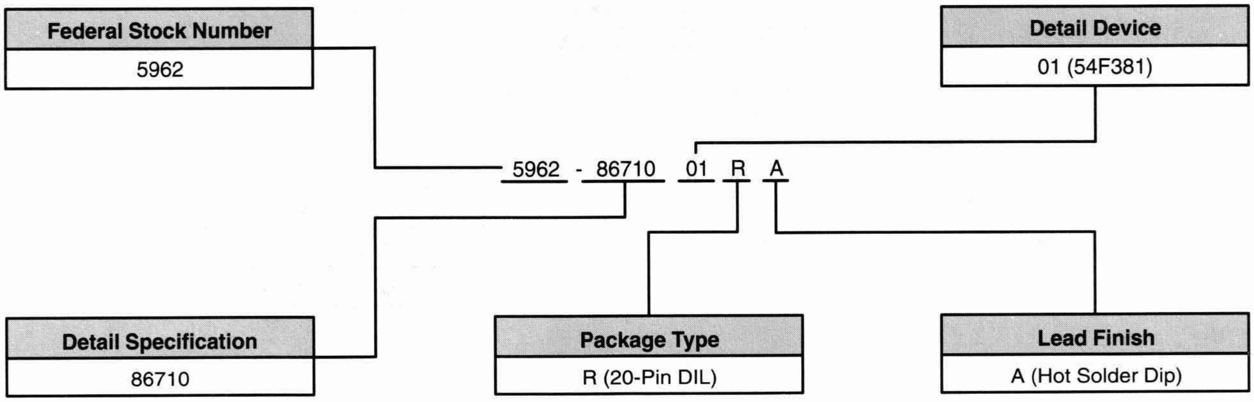

Military Semiconductor Integrated Circuits

Device Nomenclature

MIL-STD-883C*

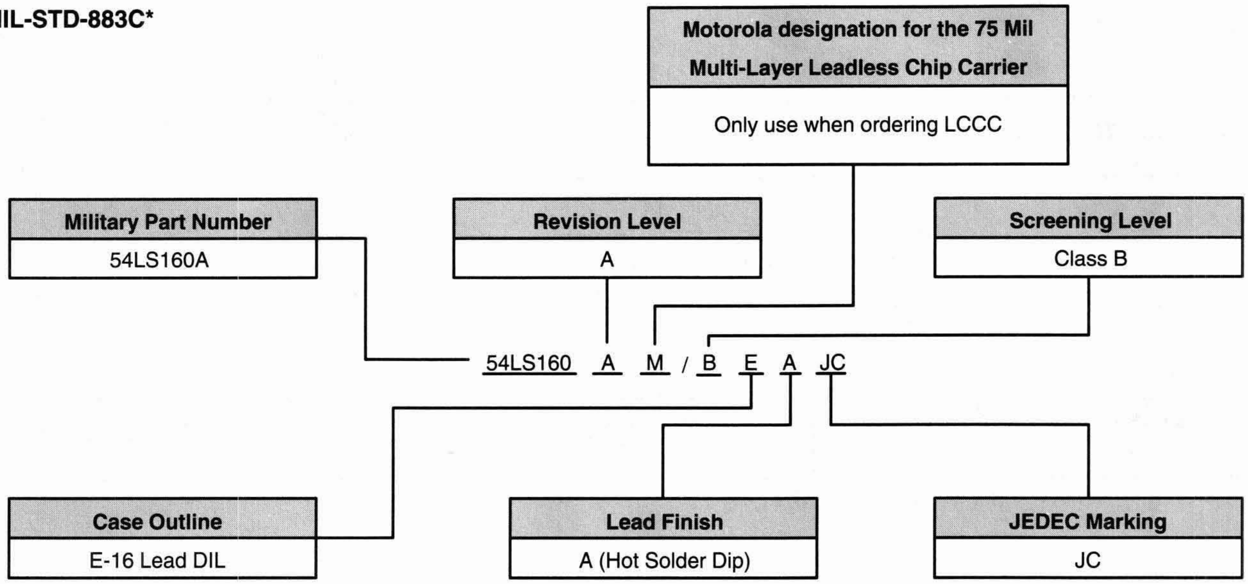

Motorola Enhanced Process (MEP)*

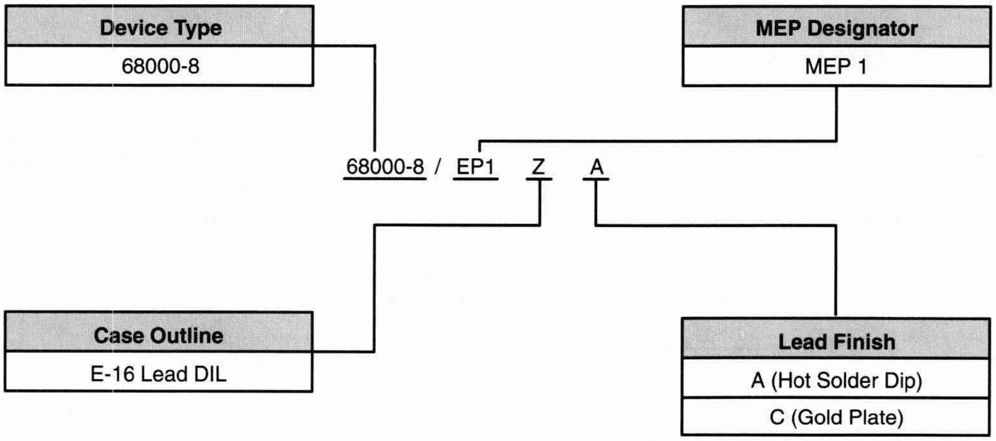

*Both 883C and MEP part number nomenclatures include an "M" after the device type to indicate the 75 mil LCCC package.

Military Semiconductor Integrated Circuits

Device Nomenclature

Motorola "S" Flow

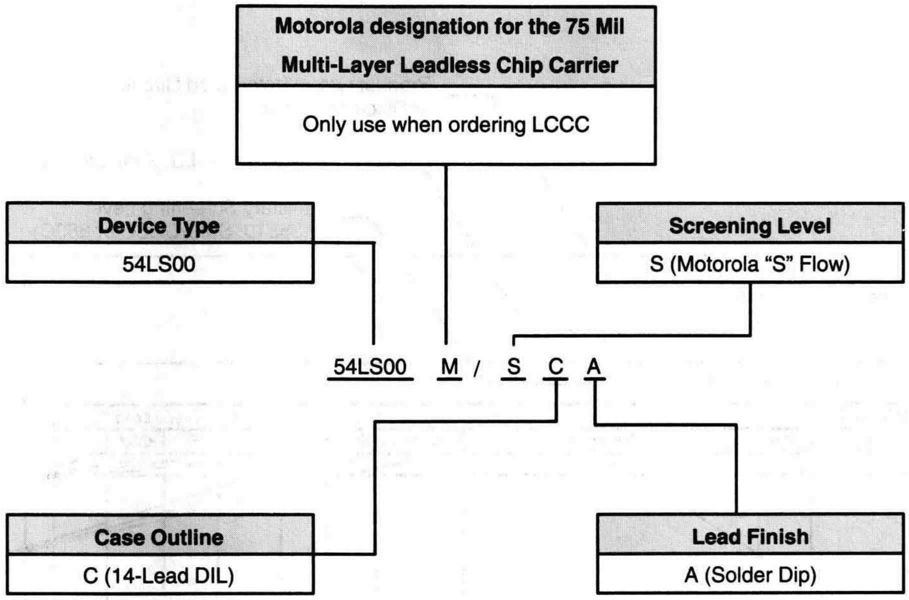

Military Semiconductor Integrated Circuits

Product Portfolio

The following section contains our complete military integrated circuit product portfolio. For your reference, the description below identifies our page layout and the corresponding sections.

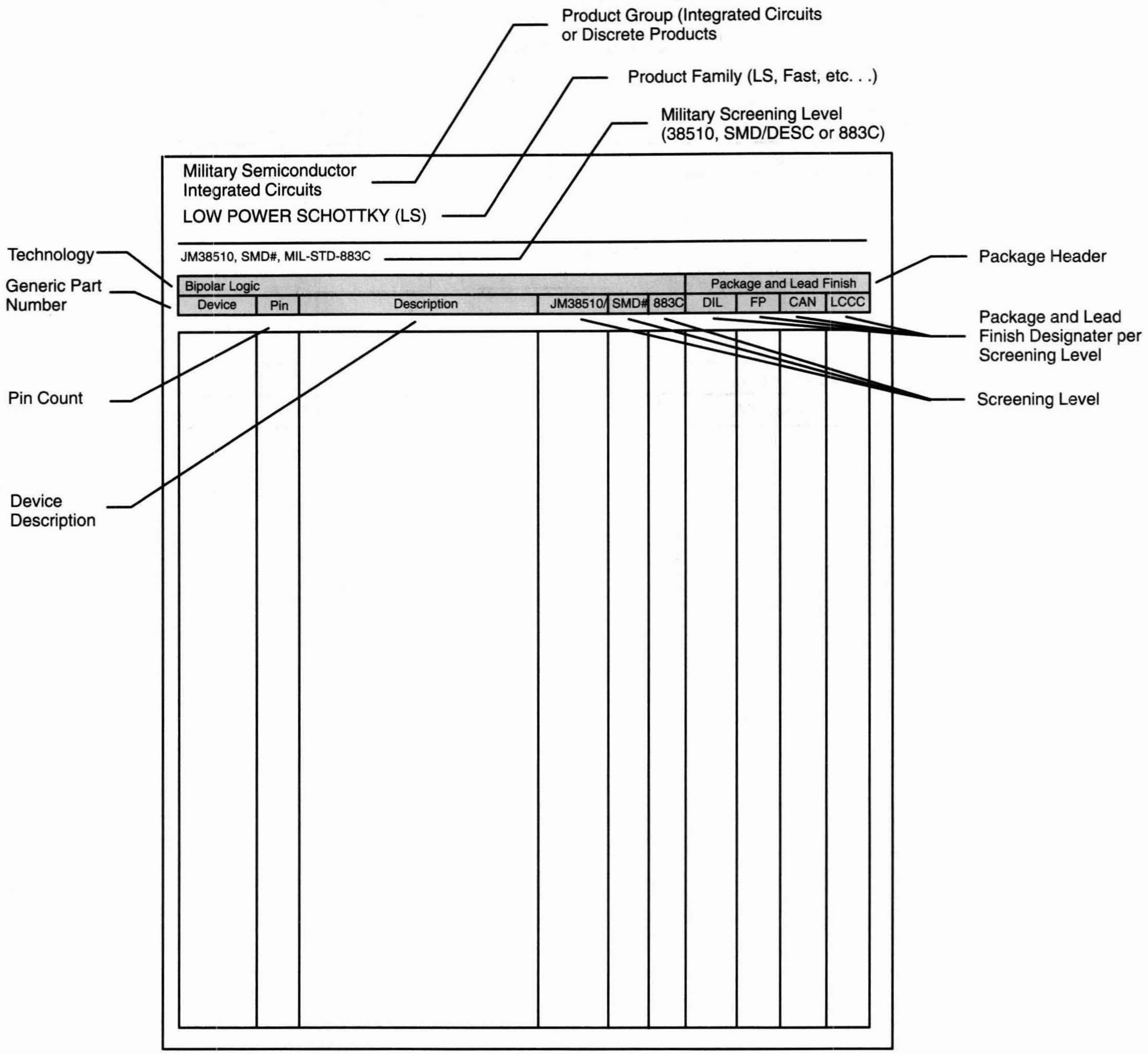

GEL-PAK™

- The Motorola Military Products Operation MPO, has converted from waffle pack chip trays to GEL-PAK for all chip sales.
- Product affected: All integrated circuits, both Military and Commercial (MCC), as offered by MPO.
- Appearance: External looks are the same. Black, Fluoroware ESD approved with a tray and lid held together by clips in a vacuum sealed bag.
- 2 x 2 inch for standard IC product and 4 x 4 inch (NEW) for larger die (i.e. Microprocessors).

• • • ADVANTAGES • • •

- GEL-PAK Packaging
  - —Cleans bottom side of die
  - —Captures all chip dust and fragments
  - —Eliminates chafing of die in cavities
  - —No requirement for paper above die
  - —Elimination of die sticking in cavities
  - —More positive orientation
  - —Eliminates spilling during handling
  - —Easier access to edge of die for manual operations
  - —Reduces number of tray configurations

GEL-PAK Vacuum Release Chip Trays

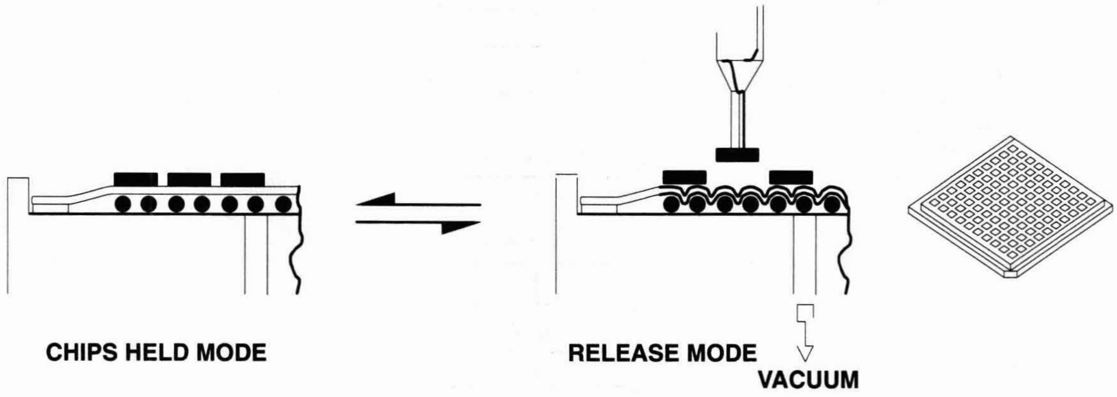

Impact: Resolves numerous quality issues associated with die handling and packaging

Note: User must be aware of vacuum release requirement. For further information, please contact: the following:

Vichem Corp.	Phone: (415) 969-1313 FAX: (415) 969-1947	MPO Marketing	Phone: (602) 897-3769 FAX: (602) 897-4459

Chip and Wafer Products (continued)

CMOS: 14000,54/74HC & HCT
LS: 54/74LS
FAST: 54/74AC & ATC
ANALOG/LINEAR
ECLinPS: 10E/100E
MECL: 10K & 10KH

MCU/MPU/RISC/DSP
(on a selective basis)

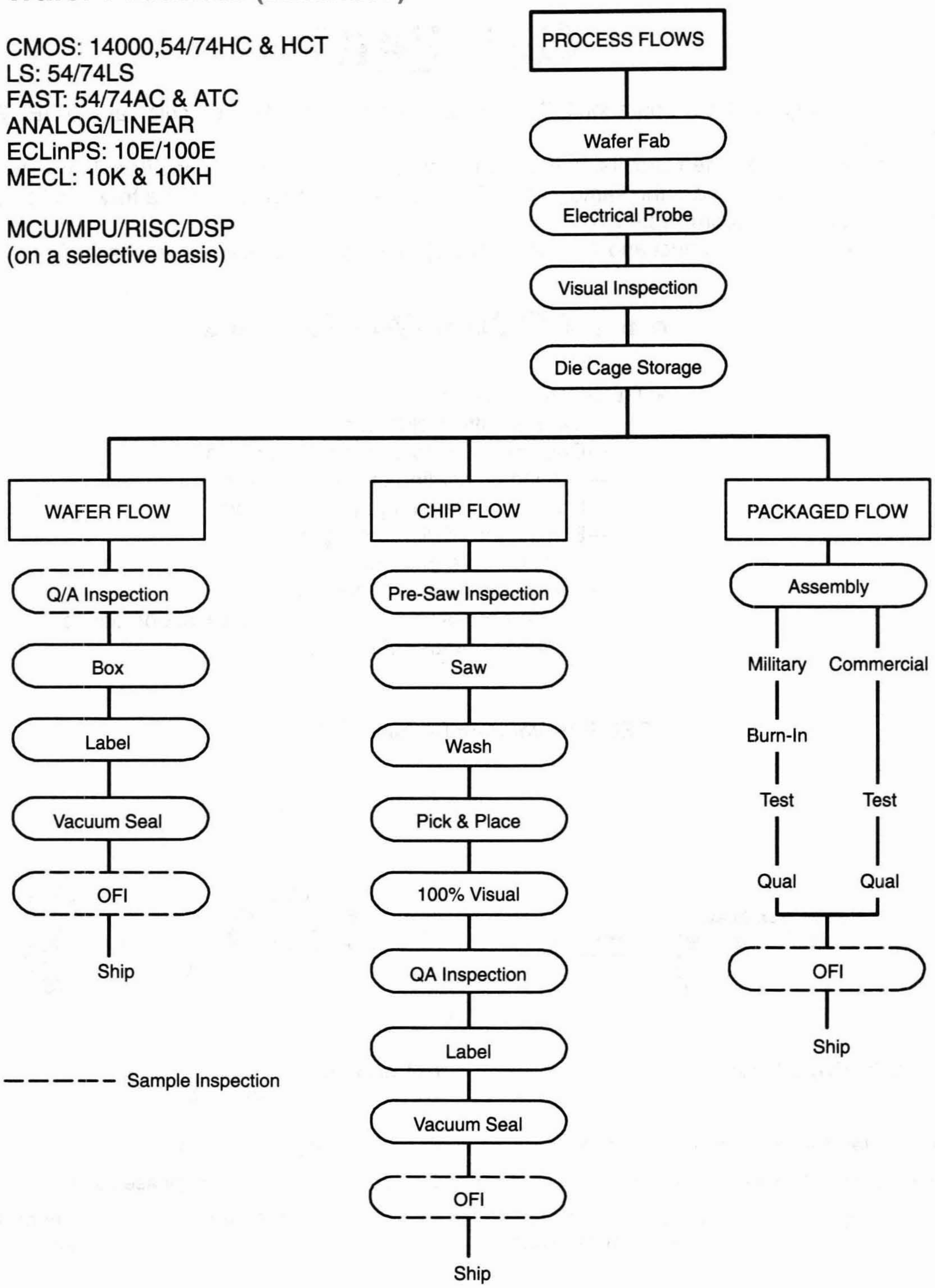

FOR MIL-STD-883, METHOD 5008: LOT ACCEPTANCE TESTING

MOTOROLA RECOMMENDS THESE AUTHORIZED DIE PROCESSORS

PROCESSOR	PHONE	FAX
ELMO SEMICONDUCTOR CORP.	818-768-7400	818-767-7038
MINCO TECHNOLOGY LABS, INC.	512-834-2022	512-837-6285
SEMI DICE, INC.	213-594-4631	213-430-5942

Military Semiconductor Integrated Circuits

Product Offering

	Page
Analog/Telecom & Special Function	6.2-2
Logic	6.2-5
ECL Products	6.2-5
ECLinPS Products	6.2-5
MECL 10K Products	6.2-5
MECL 10KH Products	6.2-8
MECL III Products	6.2-9
FACT Products	6.2-11
FAST Products	6.2-12
HCMOS Products	6.2-14
LS Products	6.2-16
Metal Gate CMOS Products	6.2-20
TTL Products	6.2-21
Memory Products	6.2-22
8-Bit Microprocessors & Microcontrollers	6.2-27
32-Bit Controllers & Peripherals	6.2-27
16 & 32-Bit Microprocessors	6.2-27
RISC & DSP Products	6.2-30

Military Semiconductor Integrated Circuits

ANALOG/TELECOM & SPECIAL FUNCTION

JM38510/, SMD#, MIL-STD-883

Analog						Package Type and Lead Finish			
Device	**Pins**	**Description**	**JM38510/**	**SMD#**	**883**	**DIL**	**FP**	**CAN**	**LCCC**
10319	24	High Speed 8-Bit A/D Flash Convertor			/B	JA			
108	14	Precision Operational Amplifier			/B	CA			
	8				/B	PA		GA	
108A	14	Precision Operational Amplifier			/B	CA			
	8		10104		/B	PA		GA	
111	8	High Performance Voltage Comparator	10304			PA			
117K	3	Adjustable Output Positive Voltage Regulator		77034	/B			2Q91	
124	14	Quad Low Power Operational Amplifier	11005		/B	CA			
137K	3	Negative Adjustable 1.5 A Voltage Regulator			/B			2Q91	
139	14	Quad Single Supply Comparator	11201		/B	CA			
139A	14	Quad Single Supply Comparator			/B	CA			
1488	14	Quad MDTL Line Driver [T_A = 0°C to +75°C]			LTR	CA			
1489	14	Quad MDTL Line Driver [T_A = 0°C to +75°C]			LTR	CA			
1489A	14	Quad MDTL Line Receiver [T_A = 0°C to +75°C]			LTR	CA			
1508	16	8-Bit Multiplying D/A Converter			/B	EA			
1525A	16	Pulse Width Modulator Control Circuit	12602	5962-8951101	/B	TBD			
1526	18	Pulse Width Modulator Control Circuit	12603	8551501	/B	VA			
1527A	16	Pulse Width Modulator Control Circuit	12604	5962-8951102	/B	TBD			
1536	8	High-Voltage Operational Amplifier			/B	PA		GA	
1537	14	Dual Operational Amplifier			/B	CA			
1539	14	High Slew-Rate Operational Amplifier			/B	CA			
	8				/B	PA		GA	
1545	14	Wideband Amplifier		5962-8671201	/B	CA			
	10			5962-8671201	/B			IA	
1550	10	RF/IF Amplifier			/B			IA	
1554	10	1-Watt Power Amplifier			/B			IA	
1555	8	Timing Circuit			/B	PA		GA	
1556	14	High Performance Operational Amplifier			/B	CA			
	8				/B	PA		GA	
1558	14	Dual Operational Amplifier			/B	CA			
	8				/B	PA		GA	
1558S	14	High Slew-Rate Dual Operational Amplifier			/B	CA			
	8				/B	PA		GA	
1563	10	Adjustable Negative Voltage Regulator			/B			IA	
1568	14	Dual Positive 15 Volt Tracking Regulator			/B	CA			
	10				/B			IA	
1569	10	Adjustable Positive Voltage Regulator			/B			IA	
158	8	Dual Low Power Operational Amplifier		5962-8771001	/B	PA		GA	
1590	8	Wideband Amplifier with AGC		5962-8765701	/B			GA	

NOTE: TBD (Based on Customer Demands)

Military Semiconductor Integrated Circuits

ANALOG/TELECOM & SPECIAL FUNCTION (continued)

JM38510/, SMD#, MIL-STD-883

Analog						Package Type and Lead Finish			
Device	Pins	Description	JM38510/	SMD#	883	DIL	FP	CAN	LCCC
1594	16	Four-Quadrant Multiplier			/B	EA			
1595	14	Four-Quadrant Multiplier			/B	CA			
1596	14	Balanced Modulator-Demodulator		5962-8857101	/B	CA			
	10			5962-8857101	/B			IA	
1709	14	General Purpose Operational Amplifier			/B	CA			
	8				/B	PA		GA	
1723	14	Adjustable Positive or Negative Voltage Reg			/B	CA			
	10				/B			IA	
1733	14	Differential Video Amplifier		8418501	/B	CA			
	10			8418501	/B			IA	
1741	14	General Purpose Operational Amplifier			/B	CA			
	8				/B	PA		GA	
1741S	8	High Slew-Rate Operational Amplifier			/B	PA		GA	
1747	14	Dual 1741 Operational Amplifier			/B	CA			
	10				/B			IA	
193	8	Dual Comparator			/B			GA	
193A	8	Dual Comparator			/B			GA	
2003A	16	Darlington Driver	14103		/B	EA			
26LS31	16	Quad RS-422 Line Driver w/ 3-State Outputs		7802301	/B	EA	FA		2A
26LS32	16	Quad RS-422/23 Line Rec. – 3-State Outputs		7802001	/B	EA	2Q92		2A
35035	24	DC Brushless Motor Controller			/B	LA			
35039	8	DC Brushless Motor Controller Adapter			*	1Q92			
35063	8	DC to DC Converter Control Circuit			/B	PA			
35074	14	Quad High-Perform. Single-Supply Op Amp		5962-8996901	/B	CA			2A
35074A	14	Quad High-Perform. Single-Supply Op Amp		5962-8996902	/B	CA			2A
35102	8	Sleep Mode Op-Amp			/B	2Q92			
35164	8	Undervoltage Lockout			/B	PA			
3517	16	Continuously Variable-Slope Delta Mod/Demod		5962-8764301	/B	EA			2A
35174	14	Low Power Single Supply Op Amp			/B	CA			
35179	14	Quad Low Noise OpAmp			/B	2Q92			
3523	8	Overvoltage Sensing Circuit		5962-8978001	/B	PA			
431	8	Programmable Precision References	14801	8410901	/B	PA			
55107	14	Dual Line Receiver	10401		/B	CA			
6875A	16	6800 MPU Clock Generator/Driver			/B	EA			
7805	2	Positive Voltage Regulator (1.5 A, 5 V)			/B			3Q92	
7806	2	Positive Voltage Regulator (1.5 A, 6 V)			/B			3Q92	
7806A	2	Positive Voltage Regulator (1.5 A, 6 V)			/B			3Q92	

*** Offshore Commercial Wafer Flow**

Military Semiconductor Integrated Circuits

ANALOG (continued)

JM38510/, SMD#, MIL-STD-883

Device	Pins	Description	JM38510/	SMD#	883	DIL	FP	CAN	LCCC
7808	2	Positive Voltage Regulator (1.5 A, 8 V)			/B			3Q92	
7808A	2	Positive Voltage Regulator (1.5 A, 8 V)			/B			3Q92	
7812	2	Positive Voltage Regulator (1.5 A, 12 V)			/B			3Q92	
7812A	2	Positive Voltage Regulator (1.5 A, 12 V)			/B			3Q92	
7815	2	Positive Voltage Regulator (1.5 A, 15 V)			/B			3Q92	
7815A	2	Positive Voltage Regulator (1.5 A, 15 V)			/B			3Q92	
7818	2	Positive Voltage Regulator (1.5 A, 18 V)			/B			3Q92	
7818A	2	Positive Voltage Regulator (1.5 A, 18 V)			/B			3Q92	
7908	2	Negative Voltage Regulator (1.5 A, 8 V)			/B			3Q92	
7908A	2	Negative Voltage Regulator (1.5 A, 8 V)			/B			3Q92	
7912	2	Negative Voltage Regulator (1.5 A, 12 V)			/B			4Q92	
7912A	2	Negative Voltage Regulator (1.5 A, 12 V)			/B			4Q92	
7915	2	Negative Voltage Regulator (1.5 A, 15 V)			/B			4Q92	
7915A	2	Negative Voltage Regulator (1.5 A, 15 V)			/B			4Q92	
7918	2	Negative Voltage Regulator (1.5 A, 18 V)			/B			4Q92	
7918A	2	Negative Voltage Regulator (1.5 A, 18 V)			/B			4Q92	

ANALOG/TELECOM & SPECIAL FUNCTION

JM38510/, SMD#, MIL-STD-883

Telecom & Special Functions						Package Type and Lead Finish			
Device	Pins	Description	JM38510/	SMD#	883	DIL	FP	CAN	LCCC
145406	16	RS232/V.28 Driver Receiver			/B	2Q92			
145152-2	28	PLL Parallel Programmable			/B	XA			
145151-2	28	PLL Parallel Programmable			/B	XA			
145146-2	20	PLL 4-Bit Data Bus Programmable			/B	2Q92			
145155-2	18	PLL Serial Input			/B	2Q92			
145157-2	16	PLL Serial Input			/B	2Q92			
145156-2	20	PLL Serial Input			/B	2Q92			
145158-2	16	PLL Serial Input			/B	1Q92			
145407	20	RS232/V.28 Driver Receiver (5.0 Volt only)			/B	4Q92			

EMITTER COUPLED LOGIC IN PICO SECONDS (ECLinPS)

JM38510/, SMD#, MIL-STD-883

100K ECLinPS Logic						Package Type and Lead Finish			
Device	Pins	Description	JM38510/	SMD#	883	DIL	QFP	CAN	LCCC
10E416	28	8-Bit Synchronous Binary Up Counter			/B		1Q92		
10E501	28	Quad 4-Input OR/NOR Gate			/B		1Q92		
10E504	28	Quint 2-Input AND/NAND Gate			/B		1Q92		
10E507	28	Quint 2-Input XOR/XNOR Gate			/B		1Q92		
10E511	28	1:9 Differential Clock Driver, Low Skew, Enable, V_{BB}, Differential Outputs			/B		1Q92		
10E516	28	Quint Differential Line Receiver			/B		1Q92		
10E541	28	8-Bit Shift Register			/B		1Q92		
10E542	28	9-Bit Shift Register			/B		TBD		
10E543	28	9-Bit Hold Register			/B		TBD		
10E551	28	6-Bit D Register			/B		1Q92		
10E558	28	5-Bit 2:1 Multiplexer			/B		TBD		
100E416	28	8-Bit Synchronous Binary Up Counter			/B		TBD		
100E501	28	Quad 4-Input OR/NOR Gate			/B		TBD		
100E504	28	Quint 2-Input AND/NAND Gate			/B		TBD		
100E507	28	Quint 2-Input XOR/XNOR Gate			/B		TBD		
100E511	28	1:9 Differential Clock Driver Low Skew, Enable, V_{BB}, Differential Output			/B		4Q91		
100E516	28	Quint Differential Line Receiver			/B		1Q92		
100E541	28	8-Bit Shift Register			/B		TBD		
100E542	28	9-Bit Shift Register			/B		TBD		
100E543	28	9-Bit Hold Register			/B		TBD		
100E551	28	6-Bit D Register			/B		TBD		
100E558	28	5-Bit 2:1 Multiplexer			/B		TBD		
100E851	28	6-Bit D Register, Differential Data & Clk Inputs V_{BB}, Common Reset, Single Ended Output			/B		1Q91		

NOTE: TBD (Based on Customer Demands)

MOTOROLA EMITTER COUPLED LOGIC (MECL)

JM38510/, SMD#, MIL-STD-883

MECL 10K						Package Type and Lead Finish			
Device	Pins	Description	JM38510/	SMD#	883	DIL	FP	CAN	LCCC
10500	16	Quad 2-Input NOR Gate with Strobe			/B	EA	FA		2A
10501	16	Quad OR/NOR Gate	06001		/B	EA	FA		2A
10502	16	Quad 2-Input NOR Gate	06002		/B	EA	FA		2A
10503	16	Quad 2-Input OR Gate			/B	EA	FA		2A
10504	16	Quad 2-Input AND Gate	06201		/B	EA	FA		2A
10505	16	Triple 2-3-2-Input OR/NOR Gate	06003		/B	EA	FA		2A
10506	16	Triple 4-3-3-Input NOR Gate	06004		/B	EA	FA		2A

MOTOROLA EMITTER COUPLED LOGIC (MECL) (continued)

JM38510/, SMD#, MIL-STD-883

MECL 10K						Package Type and Lead Finish			
Device	Pins	Description	JM38510/	SMD#	883	DIL	FP	CAN	LCCC
10507	16	Triple 2-Input Exclusive OR Exclusive NOR Gate	06005		/B	EA	FA		2A
10509	16	Dual 4-5-Input OR/NOR Gate	06006		/B	EA	FA		2A
10513	16	Quad Exclusive OR Gate			/B	EA	FA		2A
10514	16	Triple Line Receiver			/B	EA	FA		2A
10515	16	Quad Line Receiver			/B	EA	FA		2A
10516	16	Triple Line Receiver		7800901	/B	EA	FA		2A
10517	16	Dual 2-Wide 2-3-Input OR-AND/OR-AND-INVERT Gate			/B	EA	FA		2A
10518	16	Dual 2-Wide 3-Input OR-AND Gate			/B	EA	FA		2A
10519	16	4-Wide 4-3-3-3-Input OR-AND Gate			/B	EA	FA		2A
10521	16	4-Wide OR-AND/OR-AND-INVERT Gate		5962-8857701	/B	EA	FA		2A
10523	16	Triple 4-3-3 Input Bus Driver			/B	EA	FA		2A
10524	16	Quad TTL-to-MECL Translator	06301		/B	EA	FA		2A
10525	16	Quad MECL-to-TTL Translator	06302		/B	EA	FA		2A
10530	16	Dual Latch			/B	EA	FA		2A
10531	16	Dual Type D Master-Slave Flip-Flop	06101		/B	EA	FA		2A
10533	16	Quad Latch			/B	EA	FA		2A
10535	16	Dual J-K Master-Slave Flip-Flop	06104		/B	EA	FA		2A
10536	16	Universal Hexadecimal Counter			/B	EA	FA		2A
10537	16	Universal Decade Counter			/B	EA	FA		2A
10538	16	Bi-Quinary Counter			/B	EA	FA		2A
10539	16	32 x 8 Bit PROM			/B	EA	FA		2A
10541	16	4-Bit Universal Shift Register		5962-8855701	/B	EA	FA		2A
10545	16	64-Bit Register File (RAM)		5962-8856001	/B	EA	FA		2A
10549	16	256 x 4 Bit PROM			/B	EA	FA		2A
10552	16	256 x 1 Bit RAM			/B	EA	FA		2A
10553	16	Quad Latch (Negative Clock)			/B	EA	FA		2A
10558	16	Quad 2-Input Multiplexer (Noninverting)		5962–8779201	/B	EA	FA		2A
10560	16	12-Bit Parity Generator-Checker			/B	EA	FA		2A
10561	16	Binary to 1-8 Line Decoder (Low)			/B	EA	FA		2A
10562	16	Binary to 1-8 Line Decoder (High)			/B	EA	FA		2A
10563	16	Error Detection and Correction Circuit (IBM Pattern)			/B	EA	FA		2A
10564	16	8-Line Multiplexer		5962-8852701	/B	EA	FA		2A
10565	16	8-Input Priority Encoder			/B	EA	FA		2A
10566	16	5-Bit Magnitude Comparator			/B	EA	FA		2A
10568	16	Quad Latch (Common Clock)			/B	EA	FA		2A
10570	16	9+2-Bit Parity Generator-Checker			/B	EA	FA		2A

Military Semiconductor Integrated Circuits

MOTOROLA EMITTER COUPLED LOGIC (MECL) (continued)

JM38510/, SMD#, MIL-STD-883

MECL 10K						Package Type and Lead Finish			
Device	**Pins**	**Description**	**JM38510/**	**SMD#**	**883**	**DIL**	**FP**	**CAN**	**LCCC**
10571	16	Dual Binary to 1-4-Decoder (Low)			/B	EA	FA		2A
10572	16	Dual Binary to 1-4-Decoder (High)			/B	EA	FA		2A
10573	16	Quad 2-Input Multiplexer/Latch			/B	EA	FA		2A
10574	16	Dual 4-to-1 Multiplexer			/B	EA	FA		2A
10575	16	Quint Latch			/B	EA	FA		2A
10576	16	Hex D Master-slave Flip-Flop	06103		/B	EA	FA		2A
10578	16	Binary Counter			/B	EA	FA		2A
10579	16	Look-ahead Carry Block			/B	EA	FA		2A
10580	16	Dual 2-Bit High-Speed Adder/Subtracter			/B	EA	FA		2A
10581	24	4-Bit Arithmetic Logic Unit/Function Generator			/B	JA	KA		N/A
10582	16	2-Bit Arithmetic Logic Unit/Function Generator			/B	EA	FA		2A
10586	16	Hex D Master-Slave Flip-Flop With Reset		5962-8779301	/B	EA	FA		2A
10590	16	Quad IBM (MST)-to-MECL Translator			/B	EA	FA		2A
10591	16	Hex MECL-to-IBM (MST) Translator			/B	EA	FA		2A
10595	16	Hex Inverter/Buffer			/B	EA	FA		2A
10597	16	Hex AND Gate	06202		/B	EA	FA		2A
10598	16	Monostable Multivibrator		5962-8777301	/B	EA	FA		2A
10610	16	High Speed Dual 3-Input/3-Output OR Gate			/B	EA	FA		2A
10611	16	High Speed Dual 3-Input/3-Output NOR Gate			/B	EA	FA		2A
10612	16	High Speed Dual 3-Input/3-Output OR/NOR Gate		5962-8775001	/B	EA	FA		2A
10616	16	High Speed Triple Line Receiver			/B	EA	FA		2A
10631	16	High Speed Dual D Master-Slave Flip-Flop	06102		/B	EA	FA		2A

Military Semiconductor Integrated Circuits

MOTOROLA EMITTER COUPLED LOGIC (MECL) (continued)

JM38510/, SMD#, MIL-STD-883

MECL 10KH						Package Type and Lead Finish			
Device	**Pins**	**Description**	**JM38510/**	**SMD#**	**883**	**DIL**	**FP**	**CAN**	**LCCC**
10H416	16	Binary Counter		5962-8759001	/B	EA	FA		2A
10H500	16	Quad 2-Input NOR w/Strobe			/B	EA			
10H501	16	Quad OR/NOR Gate		5962-8750301	/B	EA	FA		2A
10H502	16	Quad 2-Input NOR Gate		5962-8755701	/B	EA	FA		2A
10H503	16	Quad 2-Input OR Gate		5962-8756501	/B	EA	FA		2A
10H504	16	Quad 2-Input AND Gate		5962-8750401	/B	EA	FA		2A
10H505	16	Triple 2-3-2 Input OR/NOR Gate		5962-8750701	/B	EA	FA		2A
10H506	16	Triple 4-3-3 Input NOR Gate		5962-8756401	/B	EA	FA		2A
10H507	16	Triple 2-Input/Exclusive NOR Gate		5962-8772701	/B	EA	FA		2A
10H509	16	Dual 4-5 Input OR/NOR Gate			/B	EA	FA		2A
10H513	16	Quad Exclusive OR Gate		5962-8755801	/B	EA	FA		2A
10H515	16	Quad Line Receiver		5962-8750101	/B	EA	FA		2A
10H516	16	Triple Line Receiver		5962-8750201	/B	EA	FA		2A
10H517	16	Dual 2-Wide 2-3 Input OR-AND/OR-AND-INVERT Gate			/B	EA	FA		2A
10H518	16	Dual 2-Wide 3-Input OR/AND Gate		5962-8755901	/B	EA	FA		2A
10H519	16	4-Wide 4-3-3-3 Input OR-AND Gate		5962-8772801	/B	EA	FA		2A
10H521	16	4-Wide OR-AND/OR-AND INVERT Gate		5962-8773001	/B	EA	FA		2A
10H524	16	Quad TTL-to-MECL Translator		5962-8756001	/B	EA	FA		2A
10H525	16	Quad MECL-to-TTL Translator		5962-8750801	/B	EA	FA		2A
10H531	16	Dual D Master Slave Flip-Flop		5962-8756101	/B	EA	FA		2A
10H536	16	Universal Hexadecimal Counter		5962-8700101	/B	EA	FA		
10H541	16	4-Bit Universal Shift Register		5962-8751101	/B	EA	FA		2A
10H558	16	Quad 2-Input Multiplexer (Noninverting)		5962-8756601	/B	EA	FA		2A
10H560	16	12-Bit Parity Generator-Checker		5962-8756201	/B	EA	FA		2A
10H561	16	Binary to 1-8 Line Decoder (Low)		5962-8756701	/B	EA	FA		2A
10H562	16	Binary 1-8 Line Decoder (High)			/B	EA	FA		2A
10H564	16	8-Line Multiplexer		5962-8772901	/B	EA	FA		2A
10H571	16	Dual Binary to 1-4 Line Decoder (Low)		5962-8756801	/B	EA	FA		2A
10H574	16	Dual 4-1 Multiplexer		5962-8750601	/B	EA	FA		2A
10H576	16	Hex D Master-Slave Flip-Flop		5962-8751201	/B	EA	FA		2A
10H581	24	4-Bit Arithmetic Logic Unit/Function Generator			/B	JA	KA		N/A
10H586	16	Hex D Master-Slave Flip-Flop w/Common Reset		5962-8756301	/B	EA	FA		2A
10H588	16	Hex Buffer w/Enable		5962-8750901	/B	EA	FA		2A
10H589	16	Hex Inverter w/Enable		5962-8751001	/B	EA	FA		2A
10H609	16	Dual 4-5-Input OR/NOR Gate		5962-8756901	/B	EA	FA		2A
10H610	16	High Speed Dual 3 Input/3 Output OR Gate		5962-8754101	/B	EA	FA		2A
10H750	16	ECL-to-TTL Translator (Quad), Single Power Supply (–5.2 V or +5.0 V)			/B	EA	FA		2A

MOTOROLA EMITTER COUPLED LOGIC (MECL) (continued)

JM38510/, SMD#, MIL-STD-883

MECL 10KH						Package Type and Lead Finish			
Device	Pins	Description	JM38510/	SMD#	883	DIL	FP	CAN	LCCC
10H751	20	Quad TTL/NMOS to MECL Translator			/B	4Q91	4Q91		4Q91
10H1000	28	9-Bit TTL to ECL Translator			/B		TBD		TBD
10H1001	28	9-Bit ECL to TTL Translator			/B		TBD		TBD
10H1002	28	9-Bit Latch /TTL to ECL Translator			/B		TBD		TBD
10H1003	28	9-Bit Latch /ECL to TTL Translator			/B		TBD		TBD
10H1040	28	68030/040 ECL/TTL Clock Driver			/B		TBD		TBD
10H1040	28	68030/040 ECL/TTL Clock Driver			/B		TBD		TBD
10H1041	28	Single Supply ECL/TTL 1:9 Clock Driver			/B		TBD		TBD
10H1042	28	68030/040 ECL/TTL Clock Driver			/B		TBD		TBD
10H1043	28	Dual Supply ECL/TTL 1:8 Clock Driver			/B		TBD		TBD

NOTE: TBD (Based on Customer Demands)

MOTOROLA EMITTER COUPLED LOGIC (MECL) III

JM38510/, SMD#, MIL-STD-883

MECL III						Package Type and Lead Finish			
Device	Pins	Description	JM35810/	SMD#	883	DIL	FP	CAN	LCCC
1648M	14	Voltage Controlled Oscillator, [T_A = –55°C to +125°C]			/B	CA	DA		2A
1650	16	Dual A/D Converter [T_A = –30°C to +85°C]			LTR	EA	FA		
1651	16	Dual A/D Converter [T_A = –30°C to +85°C]			LTR	EA	FA		
1654	16	Binary Counter [T_A = –30°C to +85°C]			LTR	EA			
1660	16	Dual 4-Input Gate [T_A = –30°C to +85°C]			LTR	EA	FA		
1662	16	Quad 2-Input NOR Gate [T_A = –30°C to +85°C]			LTR	EA	FA		
1664	16	Quad 2-Input OR Gate [T_A = –30°C to +85°C]			LTR	EA	FA		
1670	16	Master-Slave Flip-Flop [T_A = –30°C to +85°C]			LTR	EA	FA		
1672	16	Triple 2-Input Exclusive OR Gate, [T_A = –30°C to +85°C]			LTR	EA	FA		
1678	16	Bi-Quinary Counter [T_A = –30°C to +85°C]			LTR	EA			
1690	16	UHF Prescaler D Flip-Flop [T_A = –30°C to +85°C]			LTR	EA	FA		
1692	16	Quad Line Receiver [T_A = –30°C to +85°C]			LTR	EA	FA		

Military Semiconductor Integrated Circuits

MOTOROLA EMITTER COUPLED LOGIC (MECL)

JM38510/, SMD#, MIL-STD-883

MECL Phase-Locked-Loop (PLL)						Package Type and Lead Finish			
Device	**Pins**	**Description**	**JM38510/**	**SMD#**	**883**	**DIL**	**FP**	**CAN**	**LCCC**
12502	14	Analog Mixer Double Balanced			/B	CA			
12509	16	Two-Modulus ÷5/÷6, 600 MHz Typical			/B	EA			
12511	16	Two-Modulus ÷8/÷9, 600 MHz Typical			/B	EA			
12513	16	Two-Modulus ÷10/÷2, 600 MHz Typical			/B	EA			
12514	16	Counter-Control Logic			/B	EA			
12515	8	Low Power Two-Modulus Prescaler			/B	PA			
12540	14	Phase-Frequency Detector		5962-8775201	/B	CA			
12561	16	Crystal Oscillator (2–20 MHz)			/B	EA			

Military Semiconductor Integrated Circuits

ADVANCED CMOS TECHNOLOGY (FACT)

JM38510/, SMD#, MIL-STD-883

CMOS Logic						Package Type and Lead Finish			
Device	Pins	Description	JM38510/	SMD	883	DIL	FP	CAN	LCCC
54AC00	14	Quad 2-Input NAND Gate		5962-87549	/B	1Q92			3Q92
54ACT00	14	Quad 2-Input NAND Gate, with TTL Inputs		5962-87699	/B	1Q92			3Q92
54AC02	14	Quad 2-Input NOR Gate		5962-87612	/B	1Q92			3Q92
54ACT02	14	Quad 2-Input NOR Gate, with TTL Inputs		TBD	/B	1Q92			3Q92
54AC138	16	1-of-8 Decoder/Demultiplexer		5962-87622	/B	1Q92			3Q92
54ACT138	16	1-of-8 Decoder/Demultiplexer with TTL Inputs		5962-87554	/B	1Q92			3Q92
54ACT151	16	8-Input Multiplexer, with TTL Inputs		5962-88756	/B	1Q92			3Q92
54AC153	16	Dual 4-Input Multiplexer		5962-87625	/B	1Q92			3Q92
54AC174	16	Hex D Flip-Flop with Master Reset		5962-87626	/B	1Q92			3Q92
54AC240	20	Octal Buffer/Line Driver		5962-87550	/B	1Q92			3Q92
54AC244	20	Octal Buffer/Line Driver		5962-87552	/B	1Q92			3Q92
54ACT244	20	Octal Buffer/Line Driver with TTL Inputs		5962-87760	/B	1Q92			3Q92
54AC245	20	Octal Bidirectional Transceiver		5962-87758	/B	1Q92			3Q92
54ACT245	20	Octal Bidirectional Transceiver w/TTL Inputs		5962-87663	/B	1Q92			3Q92
54AC273	20	Octal D-Type Flip-Flop		5962-87756	/B	1Q92			3Q92
54AC299	20	8-Bit Shift/Store Register		5962-87754	/B	1Q92			3Q92
54ACT299	20	8-Bit Shift/Store Register with TTL Inputs		5962-88771	/B	2Q92			3Q92
54AC373	20	Octal Transparent Latch, 3-State		5962-87555	/B	1Q92			3Q92
54ACT373	20	Octal Transparent Latch, 3-State, TTL		5962-87556	/B	1Q92			3Q92
54AC374	20	Octal D Flip-Flop, TTL Compatible Inputs		5962-87694	/B	1Q92			3Q92
54ACT374	20	Octal D Flip-Flop, TTL Compatible Inputs		5962-87631	/B	1Q92			3Q92
54AC540	20	Octal Buffer/Line Driver with 3-State Outputs		5962-87695	/B	2Q91			4Q92
54AC541	20	Octal Buffer/Line Driver with 3-State Outputs		5962-88706	/B	2Q91			4Q92
54ACT74	14	Dual D Flip-Flop, with TTL Inputs		5962-87525	/B	1Q92			3Q92
54AC86	14	Quad 2-Input EX-OR Gate		5962-89550	/B	1Q92			3Q92
88913	14	Hex Divide by two Flip-Flop with matching Propagation Delays		Planned	/B	4Q91			2Q92
88914	14	Hex Divide by two Flip-Flop with Synchronized Power and Reset		Planned	/B	4Q91			2Q92
88915	28	Hex Divide by two Flip-Flop with Synchronized Power and Reset		Planned	/B		1Q92		3Q92

Military Semiconductor Integrated Circuits

ADVANCED SCHOTTKY TTL (FAST)

JM38510/, SMD#, MIL-STD-883

Bipolar Logic						Package Type and Lead Finish			
Device	**Pins**	**Description**	**JM38510/**	**SMD#**	**883**	**DIL**	**FP**	**CAN**	**LCCC**
54F00	14	Quad 2-Input NAND Gate	33001		/B	CA	DA		2A
54F02	14	Quad 2-Input NOR Gate	33301		/B	CA	DA		2A
54F04	14	Hex Inverter	33002		/B	CA	DA		2A
54F08	14	Quad 2-Input AND Gate	34001		/B	CA	DA		2A
54F10	14	Triple 3-Input NAND Gate	33003		/B	CA	DA		2A
54F109	16	Dual JK Flip-Flop with Preset	34102		/B	EA	FA		2A
54F11	14	Triple 3-Input AND Gate	34002		/B	CA	DA		2A
54F125	14	Quad Buffer, 3-State, Enable-LO			/B	CA	DA		2A
54F126	14	Quad Buffer, 3-State, Enable-HI			/B	CA	DA		2A
54F13	14	Dual 4-Input NAND Schmitt Trigger			/B	CA	DA		2A
54F132	14	Quad 2-Input NAND Schmitt Trigger			/B	CA	DA		2A
54F138	16	1-of-8 Decoder/Demultiplexer	33701		/B	EA	FA		2A
54F139	16	Dual 1-of-4 Decoder/Demultiplexer	33702		/B	EA	FA		2A
54F14	14	Hex Inverter Schmitt Trigger		5962-8875201	/B	CA	DA		2A
54F151	16	8-Input Multiplexer	33901		/B	EA	FA		2A
54F153	16	Dual 4-Input Multiplexer	33902		/B	EA	FA		2A
54F157A	16	Quad 2-Input Multiplexer	33903		/B	EA	FA		2A
54F158A	16	Quad 2-Input Multiplexer, Inverting	33904		/B	EA	FA		2A
54F161A	16	4-Bit Binary Counter, Asynchronous Reset	34301		/B	EA	FA		2Q91
54F163A	16	4-Bit Binary Counter, Synchronous Reset	34302		/B	1Q92	1Q92		1Q92
54F174	16	Hex D Flip-Flop	34107		/B	EA	FA		2A
54F175	16	Quad D Flip-Flop	34104		/B	EA	FA		2A
54F182	16	Look-Ahead Carry Generator	33802			1Q92	1Q92		1Q92
					/B	EA	FA		2A
54F194	16	Universal Shift Register	33601		/B	EA	FA		2A
54F20	14	Dual 4-Input NAND Gate	33004		/B	CA	DA		2A
54F240	20	Octal Buffer/Line Driver/Inverting/3-State	33201		/B	RA	SA		2A
54F241	20	Octal Buffer/Line Driver, 3-State	33202	5962-8687401	/B	RA	SA		2A
54F243	14	Quad Bus Transceiver/Non-Inverting/3-State	34802		/B	CA	DA		2A
54F244	20	Quad Buffer Driver/Non-Inverting/3-State	33203		/B	RA	SA		2A
54F245	20	Octal Bus Transceiver	34803	8551101	/B	RA	SA		2A
54F251	16	8-Input Multiplexer/3-State			/B	EA	FA		2A
54F253	16	Dual 4-Input Multiplexer/3-State	33908		/B	EA	FA		2A
54F257	16	Quad 2-Input Multiplexer/3-State			/B	EA	FA		2A
54F258	16	Quad 2-Input Multiplexer/Inverting/3-State			/B	EA	FA		2A
54F280	14	9-Bit Odd/Even Parity Generator/Checker	34901		/B	CA	DA		2A
54F283	16	4-Bit Full Adder	34201		/B	EA	FA		2A
54F32	14	Quad 2-Input OR Gate	33501		/B	CA	DA		2A

Military Semiconductor Integrated Circuits

ADVANCED SCHOTTKY TTL (FAST)

JM38510/, SMD#, MIL-STD-883

Bipolar Logic						Package Type and Lead Finish			
Device	Pins	Description	JM38510/	SMD#	883	DIL	FP	CAN	LCCC
54F352	16	Dual 4-Input Multiplexer	33909		/B	EA	FA		2A
54F353	16	Dual 4-Input Multiplexer/3-State	33910		/B	EA	FA		2A
54F373	20	Octal Transparent Latch/3-State	34601		/B	RA	SA		2A
54F374	20	Octal D Flip-Flop/3-State	34105		/B	RA	SA		2A
54F378	16	Hex Parallel D Register with Enable	34108	5962-8855501	/B	EA	FA		2A
54F379	16	Quad Parallel Register with Enable	34109		/B	EA	FA		2A
54F381	20	4-Bit ALU	33803	5962-8671001	/B	RA	SA		2A
54F382	20	4-Bit ALU	33804		/B	RA	SA		2A
54F398	20	Quad 2-Port Register	35001		/B	RA	SA		2A
54F399	16	4-Bit Register with Non-Inverting Outputs	35002		/B	EA	FA		2A
54F521	20	Octal Comparator			/B	RA	SA		2A
54F533	20	Octal Transparent Latch/3-State	34602		/B	RA	SA		2A
54F534	20	Octal D-Type Flip-Flop/3-State	34106		/B	RA	SA		2A
54F64	14	4-2-3-2 Input AND-OR-INVERT Gate	33401		/B	CA	DA		2A
54F74	14	Dual D Flip-Flop	34101		/B	CA	DA		2A
54F803	14	Clock Driver with Matched Propagation Delays			/B	CA	1Q92		1Q92
54F86	14	Quad 2-Input Exclusive OR Gate	34501		/B	CA	DA		2A

Military Semiconductor Integrated Circuits

HIGH SPEED CMOS (HCMOS) LOGIC

JM38510/, SMD#, MIL-STD-883

CMOS Logic						Package Type and Lead Finish			
Device	Pins	Description	JM38510/	SMD#	883	DIL	FP	CAN	LCCC
54HC00	14	Quad 2-Input NAND Gate		8403701	/B	CA			2A
54HC02	14	Quad 2-Input NOR Gate		8404101	/B	CA			2A
54HC03	14	Quad 2-Input NAND, Open Drains		5962-8764701	/B	CA			2A
54HC04	14	Hex Inverter		8409801	/B	CA			2A
54HCU04	14	Hex Unbuffered Inverter		8601001	/B	CA			2A
54HCT04	14	Hex Unbuffered Inverter, with TTL Inputs		5962-8974701	/B	CA			2A
54HC08	14	Quad 2-Input AND Gate		8404701	/B	CA			2A
54HC10	14	Triple 3-Input NAND Gate		8403801	/B	CA			2A
54HC109	16	Dual JK Flip-Flop with Set/Reset, Positive Edge Triggered		8415001	/B	EA			2A
54HC11	14	Triple 3-Input AND Gate		8404801	/B	CA			2A
54HC112	16	Dual JK Flip-Flop with Set/Reset, Negative Edge Triggered		8408801	/B	EA			2A
54HC113	14	Dual JK Flip-Flop with Set, Negative Edge Triggered		5962-8969501	/B	CA			2A
54HC132	14	Quad 2-Input Schmitt-Trigger NAND			/B	CA			2A
54HC138	16	1-of-8 Decoder/Demultiplexer		8406201	/B	EA			2A
54HC139	16	Dual 1-of-4 Decoder (Active Low Out)		8409201	/B	EA			2A
54HC14	14	Hex Schmitt-Trigger Inverter		8409101	/B	CA			2A
54HC151	16	8-Channel Digital Multiplexer		8412801	/B	EA			2A
54HC153	16	Dual 4-Channel Digital Multiplexer		8409301	/B	EA			2A
54HC157	16	Quad 2-Input Data Selector/Multiplexer		5962-8606101	/B	EA			2A
54HC158	16	Quad 2-Input Data Selector/Multiplexer, Inverted	66204	5962-8682301	/B	EA			2A
54HC161	16	Programmable 4-Bit Binary Counter, Asynchronous Clear		8407501	/B	EA			2A
54HC163	16	Programmable 4-Bit Binary Counter, Synchronous Clear		8607601	/B	EA			2A
54HC164	14	8-Bit Serial-In/Parallel-Out Shift Register	66501	8416201	/B	CA			2A
54HC165	16	8-Bit Serial-In or Parallel-In/Serial-Out Shift Register	66502	8409501	/B	EA			2A
54HC174	16	Hex D Flip-Flop with Common Clock and Reset		8407301	/B	EA			2A
54HC175	16	Quad D Flip-Flop		8408901	/B	EA			2A
54HC20	14	Dual 4-Input NAND Gate		8403901	/B	CA			2A
54HC240	20	Octal Buffer/Line Driver/Line Receiver, 3-State Inverting Output		8407401	/B	RA			2A
54HCT240	20	Octal Buffer/Line Driver/Line Receiver, 3-State Inverting Output, TTL Compatible Inputs		8550501	/B	RA			2A
54HC244	20	Octal Buffer/Line Driver/Line Receiver, 3-State	65705	8409601	/B	RA			2A
54HC245	20	Octal 3-State Noninverting BusTransceiver, TTL Compatible Inputs	65503	84085	/B	2Q92			3Q92

HIGH SPEED CMOS (HCMOS) LOGIC (continued)

JM38510/, SMD#, MIL-STD-883

CMOS Logic						Package Type and Lead Finish			
Device	Pins	Description	JM38510/	SMD#	883	DIL	FP	CAN	LCCC
54HCT245	20	Octal 3-State Noninverting BusTransceiver, TTL Compatible Inputs	65553			1Q92			1Q92
				8550601		RA			
					/B	RA			
54HC257	16	Quad 2-Input Data Selector/Multiplexer, 3-State		8512401	/B	EA			2A
54HC27	14	Triple 3-Input NOR Gate		8404201	/B	CA			2A
54HC273	20	Octal D-type Flip-Flop with Common Clock/Reset		8409901	/B	RA			2A
54HC30	14	8-Input NAND Gate		8404001	/B	CA			2A
54HC32	14	Quad 2-Input OR Gate		8404501	/B	CA			2A
54HC373	20	Octal D Transparent Latch		8407201	/B	RA			2A
54HCT373	20	Octal D Transparent Latch, 3-State, TTL Compatible Inputs		86867		1Q92			1Q92
					/B	RA			1Q92
54HC374	20	Octal D Flip-Flop, 3-State	65602			2Q92			4Q92
				8407101	/B	RA			2A
54HCT374	20	Octal D Flip-Flop, 3-State, TTL Compatible Inputs	65652	85507		1Q92			1Q92
					/B	RA			1Q92
54HC390	16	Dual Decade Counter		8600901	/B	EA			2A
54HC393	14	Dual 4-Bit Binary Counter		8410001	/B	CA			2A
54HC4020	16	14-Stage Binary Ripple Counter		8500301	/B	EA			2A
54HC4024	14	7-Stage Binary Ripple Counter		8601201	/B	CA			2A
54HC4040	16	12-Stage Binary Ripple Counter		8500401	/B	EA			2A
54HC4060	16	14-Stage Binary Ripple Counter with Oscillator		5962-8768001	/B	EA			2A
54HC4075	14	Triple 3-Input OR Gate		5962-8772201	/B	CA			2A
54HC4078	14	8-Input NOR/OR Gate		5962-8857401	/B	CA			2A
54HC42	16	BCD to 1-of-10 Decoder		5962-8682101	/B	EA			2A
54HC4538	16	Dual Precision Retriggerable/Resettable Monostable Multivibrator		5962-8688601	/B	EA			2A
54HC4543	16	BCD-to-7 Segment Latch/Decoder/Driver for Liquid Crystal Display			/B	EA			2A
54HC595	16	8-Bit Serial-to-Parallel Shift Register, 3-State		5962-8681601	/B	EA			2A
54HC73	14	Dual JK Flip-Flop with Reset		5962-8515301		CA			
					/B	CA			
54HC74	14	Dual D Flip-Flop with Set/Reset Positive Edge Triggered		8405601	/B	CA			2A
54HC85	16	4-Bit Magnitude Comparator		8601301	/B	EA			2A
54HC86	14	Quad 2-Input EX-OR Gate		8404601	/B	CA			2A

Military Semiconductor Integrated Circuits

LOW POWER SCHOTTKY (LS)

JM38510, SMD#, MIL-STD-883

Bipolar Logic						Package Type and Lead Finish			
Device	**Pins**	**Description**	**JM38510/**	**SMD#**	**883**	**DIL**	**FP**	**CAN**	**LCCC**
54LS00	14	Quad 2-Input NAND Gate	30001		/B	CA	DA		2A
54LS02	14	Quad 2-Input NOR Gate	30301			CA	DA		2A
					/B	CA			2A
54LS03	14	Quad 2-Input NAND Gate, Open-Collector	30002		/B	CA			
54LS04	14	Hex Inverter	30003		/B	CA	DA		2A
54LS05	14	Hex Inverter, Open-Collector	30004		/B	CA			2A
54LS08	14	Quad 2-Input AND Gate	31004		/B	CA	DA		2A
54LS09	14	Quad 2-Input AND Gate, Open-Collector	31005			CA	DA		
				8001901	/B	CA			
54LS10	14	Triple 3-Input NAND Gate	30005			CA	DA		
					/B	CA			
54LS11	14	Triple 3-Input AND Gate			/B	CA			
54LS107A	14	Dual JK Flip-Flop with Clear	30108		/B	CA			
54LS109A	16	Dual JK Flip-Flop with Preset	30109		/B	EA	FA		
54LS11	14	Triple 3-Input Positive AND Gate	31001			CA	DA		
					/B	CA			
54LS112A	16	Dual JK Edge-Triggered Flip-Flop	30103			EA	FA		
					/B	EA			2A
54LS113A	14	Dual JK Edge-Triggered Flip-Flop	30104			CA	DA		
					/B	CA			
54LS114A	14	Dual JK Edge-Triggered Flip-Flop	30105			CA			
54LS12	14	Triple 3-Input NAND Gate, Open-Collector	30006			CA			
54LS122	14	Retriggerable Monostable Multivibrator	31403			CA	DA		
				7600301	/B	CA			
54LS123	16	Dual Retriggerable Monostable Multivibrator	31401	7603901	/B	EA	FA		2A
54LS125A	14	Quad Buffer, Low Enable, 3-State	32301			CA	DA		2A
					/B	CA			2A
54LS126A	14	Quad Buffer, High Enable, 3-State	32302		/B	CA			
54LS13	14	Dual 4-Input Schmitt Trigger	31301			CA			
54LS132	14	Quad 2-Input Schmitt Trigger	31303				DA		
				7600401	/B	CA			
54LS133	16	13-Input NAND Gate			/B	EA			
54LS138	16	1-of-8 Decoder/Multiplexer	30701			EA	FA		
				7600501	/B	EA	FA		2A
54LS139	16	Dual 1-of-4 Decoder/Multiplexer	30702	7600701	/B	EA	FA		2A
54LS14	14	Hex Schmitt Trigger	31302			CA	DA		2A
					/B	CA			2A
54LS151	16	8-Input Multiplexer	30901	7601001		EA	FA		
					/B	EA	FA		2A
54LS153	16	Dual Input Multiplexer	30902			EA	FA		
				7601101	/B	EA			
54LS155	16	Dual 1-to-4 Decoder	32601		/B	EA			

Military Semiconductor Integrated Circuits

LOW POWER SCHOTTKY (LS) (continued)

JM38510, SMD#, MIL-STD-883

Bipolar Logic						Package Type and Lead Finish			
Device	**Pins**	**Description**	**JM38510/**	**SMD#**	**883**	**DIL**	**FP**	**CAN**	**LCCC**
54LS157	16	Quad 2-Input Multiplexer, Non-Inverting	30903	7600201	/B	EA	FA		
54LS158	16	Quad 2-Input Multiplexer, Inverting	30904	7603301	/B	EA			
54LS160A	16	BCD Decade Counter, Asynchronous Reset	31503	7700901	/B	EA			
54LS161A	16	4-Bit Binary Counter, Asynchronous Reset	31504			EA	FA		2A
				7600801		EA			
					/B	EA			2A
54LS162A	16	BCD Decade Counter, Synchronous Reset	31511			EA			
54LS163A	16	4-Bit Binary Counter, Synchronous Reset	31512			EA	FA		
				7603401	/B	EA	FA		2A
54LS164	14	8-Bit Serial-In/Parallel-Out Shift Register	30605			CA	DA		2A
					/B	CA			2A
54LS165	16	8-Bit Parallel-In/Serial-Out Shift Register	30608	7700601		EA	FA		
					/B	EA			2A
54LS166	16	8-Bit Parallel-In/Serial-Out Shift Register	30609		/B	EA			
				8001701		EA	FA		
54LS169	16	Up/Down Binary Counter			/B	EA			
54LS173	16	4-Bit D Register, 3-State			/B	EA			
54LS174	16	Hex D Flip-Flop with Clear	30106			EA	FA		
					/B	EA	FA		2A
54LS175	16	Quad D Flip-Flop with Clear	30107			EA	FA		2A
					/B	EA			2A
54LS181	24	4-Bit ALU	30801		/B	JA	KA		N/A
54LS190	16	Up/Down Decade Counter	31513			EA			
54LS191	16	Up/Down Binary Counter	31509			EA	FA		2A
				7600901	/B	EA			
54LS192	16	Up/Down Decade Counter with Clear	31507	7603601	/B	EA			
54LS193	16	Up/Down Binary Counter with Clear	31508			EA	FA		
				7600601					2A
					/B	EA			
54LS194A	16	4-Bit Right/Left Shift Register	30601		/B	EA	FA		
54LS195A	16	4-Bit Shift Register (9300 Type)	30602			EA	FA		
					/B	EA			
54LS20	14	Dual 4-Input NAND Gate	30007			CA	DA		
					/B	CA			
54LS21	14	Dual 4-Input AND Gate	31003			CA	DA		
					/B	CA			
54LS221	16	Dual One-Shot (Very Stable)	31402			EA	FA		
				7604201	/B	EA			
54LS240	20	Octal Bus/Line Driver, Inverting 3-State	32401			RA	SA		2A
				7801201	/B	RA			2A
54LS241	20	Octal Bus/Line Driver, 3-State	32402		/B	RA			
54LS242	14	Quad Bus Transceiver, Inverting, 3-State	32801	8002001		CA			
54LS243	14	Quad Bus Transceiver, Non-Inverting, 3-State	32802			CA			
				8002002					2A
					/B		DA		

LOW POWER SCHOTTKY (LS) (continued)

JM38510, SMD#, MIL-STD-883

Bipolar Logic						Package Type and Lead Finish			
Device	**Pins**	**Description**	**JM38510/**	**SMD#**	**883**	**DIL**	**FP**	**CAN**	**LCCC**
54LS244	20	Octal Driver, Non-Inverting, 3-State	32403	7705701	/B	RA	SA		2A
54LS245	20	Octal Bus Transceiver, Non-Inverting, 3-State	32803	8002101	/B	RA	SA		2A
54LS251	16	8-Input Multiplexer, 3-State	30905			EA	FA		
54LS253	16	Dual 4-Input Multiplexer, 3-State	30908			EA	FA		
				7601701		EA			
					/B	EA			2A
54LS257A	16	Quad 2-Input Multiplexer, Non-Inverting,	30906			EA	FA		2A
				7603701		EA			
					/B	EA			2A
54LS258A	16	Quad 2-Input Multiplexer, Inverting, 3-State	30907	7603801	/B	EA			
54LS259	16	8-Bit Addressable Latch (9334)	31603			EA	FA		
					/B	EA			2A
54LS26	14	Quad 2-Input NAND, High Voltage	32102			CA			
54LS266	14	Quad Exclusive NOR Gate, Open-Collector	30303		/B	CA			
54LS27	14	Triple 3-Input NOR Gate	30302			CA	DA		
					/B	CA			
54LS273	20	Octal D Flip-Flop with Clear	32501			RA	SA		
				7801001	/B	RA	SA		2A
54LS279	16	Quad Set/Reset Latch	31602			EA	FA		
				7601801	/B	EA			
54LS28	14	Quad 2-Input NOR Buffer	30204			CA			
54LS280	14	9-Bit Odd/Even Parity Generator/Checker	32901			CA	DA		
					/B	CA	DA		2A
54LS283	16	4-Bit Full Adder (Rotated LS83A)	31202			EA			
				7604301	/B	EA			
54LS298	16	Quad 2-Multiplexer, with Output Register	30909	7601901		EA	FA		
					/B	EA			
54LS30	14	8-Input NAND Gate	30009			CA	DA		
					/B	CA			
54LS32	14	Quad 2-Input OR Gate	30501			CA	DA		2A
					/B	CA	DA		
54LS365A	16	Hex Buffer, Common Enable, 3-State	32201		/B	EA	FA		
54LS367A	16	Hex Buffer, 4-Bit and 2-Bit, 3-State	32203			EA	FA		
					/B	EA	FA		2A
54LS368A	16	Hex Inverter, 4-Bit and 2-Bit, 3-State	32204			EA	FA		2A
					/B	EA			
54LS37	14	Quad 2-Input NAND Buffer	30202			CA	DA		
54LS373	20	Octal Transparent Latch, 3-State	32502		/B	RA	SA		2A
54LS374	20	Octal D Flip-Flop	32503	7801101	/B	RA	SA		2A
54LS375	16	Quad Latch	31604			EA			
54LS377	20	Octal D Flip-Flop with Enable	32504			RA	SA		
					/B	RA			2A

LOW POWER SCHOTTKY (LS) (continued)

JM38510, SMD#, MIL-STD-883

Bipolar Logic						Package Type and Lead Finish			
Device	**Pins**	**Description**	**JM38510/**	**SMD#**	**883**	**DIL**	**FP**	**CAN**	**LCCC**
54LS390	16	Dual Decade Counter	32701			EA	FA		2A
				78002601	/B	EA			
54LS393	14	Dual 4-Bit Binary Counter	32702			CA	DA		2A
					/B	CA			
54LS399	16	Quad 2-Input Multiplexer with Output Register			/B	EA			
54LS390	16	Dual Decade Counter	32701			EA	FA		2A
				78002601	/B	EA			
54LS393	14	Dual 4-Bit Binary Counter	32702			CA	DA		2A
					/B	CA			
54LS399	16	Quad 2-Input Multiplexer with Output Register			/B	EA			
54LS40	14	Dual 4-Input NAND Buffer	30201			CA			
54LS42A	16	1-of-10 Decoder	30703			EA	FA		
				7603101	/B	EA			
54LS47	16	BCD to 7-Segment Decoder/Driver	30704	7604501	/B	EA			
54LS51	14	Dual AND-OR-INVERT Gate	30401			CA	DA		
					/B	CA			2A
54LS645	20	Octal Bus Transceiver, Non-Inverting, 3-State			/B	RA			2A
54LS670	16	4 x 4 Register File, 3-State	31901	7704201	/B	EA			2A
54LS716	16	Programmable Modulo-N Counter			/B	EA			
54LS718	16	Programmable Modulo-N Counter			/B	EA			
54LS719	16	Programmable Modulo-N Counter			/B	EA			
54LS73A	14	Dual JK Flip-Flop	30101			CA	DA		
					/B	CA			
54LS74A	14	Dual D Flip-Flop	30102		/B	CA	DA		2A
54LS75	16	4-Bit Bi-Stable Latch with Q and $\overline{Q}$	31601	7601201	/B	EA	FA		
54LS76A	16	Dual JK Flip-Flop	30110				FA		
54LS85	16	4-Bit Magnitude Comparator	31101			EA	FA		
					/B	EA			2A
54LS86	14	Quad Exclusive OR Gate	30502			CA	DA		2A
					/B	CA			
54LS95B	14	4-Bit Shift Register			/B	CA			

Military Semiconductor Integrated Circuits

METAL GATE CMOS

JM385610/, SMD#, MIL-STD-883

CMOS Logic						Package Type and Lead Finish			
Device	Pins	Description	JM38510/	SMD#	883	DIL	FP	CAN	LCCC
14001A	14	Quad 2-Input NOR Gate			/B	CA			
14001B	14	Quad 2-Input NOR Gate			/B	CA			
14002A	14	Dual 4-Input NOR Gate			/B	CA			
14007A	14	Dual Complementary Pair plus Inverter			/B	CA			
14011A	14	Quad 2-Input NAND Gate			/B	CA			
14011B	14	Quad 2-Input NAND Gate			/B	CA			
14012B	14	Dual 4-Input NAND Gate			/B	CA			
14013B	14	Dual D Flip-Flop			/B	CA			
14014B	16	8-Bit Static Shift Register			/B	EA			
14015B	16	Dual 4-Bit Static Shift Register			/B	EA			
14016B	14	Quad Analog Switch/Quad Multiplexer			/B	CA			
14017B	16	Decade Counter/Divider			/B	EA			
14018B	16	Presettable Divide-by-N Counter			/B	EA			
14020B	16	14-Bit Binary Counter			/B	EA			
14021B	16	8-Bit Static Shift Register			/B	EA			
14023A	14	Triple 3-Input NAND Gate			/B	CA			
14023B	14	Triple 3-Input NAND Gate			/B	CA			
14024B	14	7-Stage Ripple Counter			/B	CA			
14025A	14	Triple 3-Input NOR Gate			/B	CA			
14025B	14	Triple 3-Input NOR Gate			/B	CA			
14027B	16	Dual JK Flip-Flop			/B	EA			
14028B	16	BCD-to-Decimal Decoder			/B	EA			
14029B	16	4-Bit Presettable Up/Down Counter			/B	EA			
14040B	16	12-Bit Binary Counter			/B	EA			
14042B	16	Quad Latch			/B	EA			
14043B	16	Quad NOR R-S Latch			/B	EA			
14044B	16	Quad NOR R-S Latch			/B	EA			
14046B	16	Phased-Locked Loop			/B	EA			
14049A	16	Hex Inverter/Buffer			/B	EA			
14050B	16	Hex Buffer			/B	EA			
14051B	16	8-Channel Analog Multiplexer			/B	EA			
14052B	16	Analog Multiplexer, Dual 4-Channel			/B	EA			
14053B	16	Triple 2-Channel Analog Multiplexer			/B	EA			
14066B	14	Quad Analog Switch			/B	CA			
14069A	14	Hex Inverter			/B	CA			
14070B	14	Quad Exclusive OR Gate			/B	CA			
14071B	14	Quad 2-Input OR Gate			/B	CA			
14072B	14	Dual 4-Input OR Gate		7706001	/B	CA			

METAL GATE CMOS (continued)

JM385610/, SMD#, MIL-STD-883

CMOS Logic						Package Type and Lead Finish			
Device	Pins	Description	JM38510/	SMD#	883	DIL	FP	CAN	LCCC
14073B	14	Triple 3-Input AND Gate		7705101	/B	CA			
14075B	14	Triple 3-Input OR Gate			/B	CA			
14076B	16	Quad D Register			/B	EA			
14081B	14	Quad 2-Input AND Gate		7702401	/B	CA			
14082B	14	Dual 4-Input AND Gate		7705901	/B	CA			
14093B	14	Quad 2-Input NAND Schmitt Trigger			/B	CA			
14094B	16	8-Bit Bus Compatible Shift/Store/Latch			/B	EA			
14099B	16	8-Bit Addressable Latch			/B	EA			
14161B	16	Binary Counter, Asynchronous Clear			/B	EA			
14174B	16	Hex D Flip-Flop			/B	EA			
14175B	16	Quad D Flip-Flop			/B	EA			
14490A	16	Hex Contact Bounce Eliminator		5962-8764601	/B	EA			
14502B	16	Strobe Hex Inverter/Buffer		7702001	/B	EA			
14503B	16	Hex 3-State Buffer			/B	EA			
14504B	16	Triple TTL or CMOS-to-CMOS Level Shifter			/B	EA			
14511B	16	BCD-to-7 Segment Latch/Decoder/Driver			/B	EA			
14512B	16	8-Channel Data Selector			/B	EA			
14517B	16	Dual 64-Bit Static Shift Register			/B	EA			
14518B	16	Dual BCD Up Counter			/B	EA			
14519B	16	4-Bit AND/OR Selector			/B	EA			
14520B	16	Dual Binary Up Counter			/B	EA			
14532B	16	8-Bit Priority Encoder			/B	EA			
14536B	16	Programmable Timer			/B	EA			
14538B	16	Dual Precision Monostable Multivibrator			/B	EA			
14539B	16	Dual 4-Channel Data Selector/Multiplexer			/B	EA			
14541B	14	Programmable Oscillator-Timer			/B	CA			
14555B	16	Dual Binary to 1-to-4 Decoder			/B	EA			
14557B	16	1-to-64-Bit Variable Length Shift Register		7901601	/B	EA			
14572A	16	Hex Gate			/B	EA			
14584B	14	Hex Schmitt Trigger		5962-8550102	/B	CA			
14585B	16	4-Bit Magnitude Comparator			/B	EA			

TRANSISTOR TO TRANSISTOR (TTL) LOGIC

JM385610/, SMD#, MIL-STD-883

Bipolar Logic						Package Type and Lead Finish			
Device	Pins	Description	JM38510/	SMD#	883	DIL	FP	CAN	LCCC
4324	14	Dual Voltage-Controlled Multivibrator				CA	DA		
4344	14	Phase-Frequency Detector		5962-8780301		CA	DA		

Military Semiconductor Integrated Circuits

MEMORIES

JM38510/, SMD#, MIL-STD-883

Bipolar Memories						Package Type and Lead Finish			
Device	**Pins**	**Description**	**JM38510/**	**SMD#**	**883**	**DIL**	**FP**	**CLCC**	**LCCC**
10539	16	32 x 8-Bit ECL PROM, 17 ns			/B	EA	FA		2A
10545	16	64-Bit ECL Register File, RAM, 18 ns		5962-8856001	/B	EA	FA		2A
10549	16	256 x 4-Bit ECL PROM, 30 ns			/B	EA	FA		2A
10552	16	256 x 1-Bit ECL RAM, 15 ns			/B	EA	FA		2A
93415	16	1024 x 1-Bit RAM, Open-Collector			/B	EA	FA		
93422	22	256 x 4-Bit RAM, 3-State Output, 60 ns	23110		/B	WA			
93L422A	22	256 x 4-Bit RAM, 3-State Output, 55 ns, Low Power			/B	WA			
93L422	22	256 x 4-Bit RAM, 3-State Output, 75 ns, Low Power	23112		/B	WA			
93425	16	1024 x 1-Bit RAM, 3-State Output			/B	EA	FA		

Specialty SRAMs						Package Type and Lead Finish			
Device	**Pins**	**Description**	**JM38510/**	**SMD#**	**883**	**SB DIL**	**FP**	**CLCC**	**LCCC**
4180-30	22	4K x 4 Cache Tag RAM Comparators, 30 ns			/B	XA			1Q92
4180-35	22	4K x 4 Cache Tag RAM Comparators, 35 ns			/B	XA			1Q92
4180-40	22	4K x 4 Cache Tag RAM Comparators, 40 ns			/B	XA			1Q92
56824-25	52	8K x 24 DSP RAM, 25 ns			/B			2Q92	
56824-30	52	8K x 24 DSP RAM, 30 ns			/B			2Q92	
56824-35	52	8K x 24 DSP RAM, 35 ns			/B			2Q92	
62110-15	52	32K x 9 Sync. FSRAM, 15 ns, Dual I/O			/B			2Q92	
62110-25	52	32K x 9 Sync. FSRAM, 25 ns, Dual I/O			/B			2Q92	
62110-35	52	32K x 9 Sync. FSRAM, 35 ns, Dual I/O			/B			2Q92	
62486-15	44	32K x 9 Sync. FSRAM, 15 ns, w/Burst Counter			/B			2Q92	
62486-25	44	32K x 9 Sync. FSRAM, 25 ns, w/Burst Counter			/B			2Q92	
62486-35	44	32K x 9 Sync. FSRAM, 35 ns, w/Burst Counter			/B			2Q92	
6294-30	28	16K x 4 Synch FSRAM, 30 ns, Out Reg's O/E			/B	XA			UA
6294-35	28	16K x 4 Synch FSRAM, 35 ns, Out Reg's O/E			/B	XA			UA
6294-40	28	16K x 4 Synch FSRAM, 40 ns, Out Reg's O/E			/B	XA			UA
62940-15	44	32K x 9 Sync. FSRAM, 15 ns, w/Burst Counter			/B				3Q92
62940-25	44	32K x 9 Sync. FSRAM, 25 ns, w/Burst Counter			/B				3Q92
62940-35	44	32K x 9 Sync. FSRAM, 35 ns, w/Burst Counter			/B				3Q92
62990-15	52	32K x 9 Sync. FSRAM, 15 ns, For RISC/CISC			/B				3Q92
62990-25	52	32K x 9 Sync. FSRAM, 15 ns, For RISC/CISC			/B				3Q92
62990-35	52	32K x 9 Sync. FSRAM, 15 ns, For RISC/CISC			/B				3Q92

Military Semiconductor Integrated Circuits

MEMORIES

JM38510/, SMD#, MIL-STD-883

Bi CMOS SRAMs						Package Type and Lead Finish			
Device	Pins	Description	JM38510/	SMD#	883	SB DIL	FP	CLCC	LCCC
6706-15	28	32K x 8 BiCMOS FSRAM, 15 ns, O/E, TTL I/O			/B	2Q92			
6706-20	28	32K x 8 BiCMOS FSRAM, 20 ns, O/E, TTL I/O			/B	2Q92			

CMOS DRAMs						Package Type and Lead Finish			
Device	Pins	Description	JM38510/	SMD#	883	SB DIL	FP	CLCC	LCCC
511000-80	18	1M x 1 High Speed DRAM, Fast Page Mode, 80 ns			/B	3Q92			
511000-80	20	1M x 1 High Speed DRAM, Fast Page Mode, 80 ns			/B				3Q92
511000-90	18	1M x 1 High Speed DRAM, Fast Page Mode, 90 ns			/B	3Q92			
511000-90	20	1M x 1 High Speed DRAM, Fast Page Mode, 90 ns			/B				3Q92
511000-110	18	1M x 1 High Speed DRAM, Fast Page Mode, 110 ns			/B	3Q92			
511000-110	20	1M x 1 High Speed DRAM, Fast Page Mode, 110 ns			/B				3Q92
511000-120	18	1M x 1 High Speed DRAM, Fast Page Mode, 120 ns			/B	3Q92			
511000-120	20	1M x 1 High Speed DRAM, Fast Page Mode, 120 ns			/B				3Q92

High Speed CMOS III Static Memories						Package Type and Lead Finish			
Device	Pins	Description	JM38510/	SMD#	883	DIL	FP	CLCC	LCCC
6164-55	28	8K x 8 Fast Static RAM, 55 ns		5962-3829409 5962-8552505	 /B	MXA XA			
6164-55	32	8K x 8 Fast Static RAM, 55 ns		5962-3829409 5962-8552505	 /B				MYA YA UA
6164-70	28	8K x 8 Fast Static RAM, 70 ns		5962-3829407 5962-8552504	 /B	MXA XA			
6164-70	32	8K x 8 Fast Static RAM, 70 ns		5962-3829407 5962-8552504	 /B				MYA YA UA
6205-15	32	32K x 9 Fast Static RAM, 15 ns, ± C/E's O/E			/B	1Q92	1Q92		
6205-25	32	32K x 9 Fast Static RAM, 25 ns, ± C/E's O/E			/B	1Q92	1Q92		
6206-15	28	32K x 8 Fast Static RAM, 15 ns, ± C/E O/E			/B	1Q92	1Q92		
6206-25	28	32K x 8 Fast Static RAM, 25 ns, ± C/E O/E			/B	1Q92	1Q92		
6206-35	28	32K x 8 Fast Static RAM, 35 ns, ± C/E O/E		5962-8866205	/B	XA	1Q92		

NOTE: TBD (Based on Customer Demands)

MEMORIES (continued)

JM38510/, SMD#, MIL-STD-883

High Speed CMOS III Static Memories						Package Type and Lead Finish			
Device	**Pins**	**Description**	**JM38510/**	**SMD#**	**883**	**DIL**	**FP**	**CLCC**	**LCCC**
6206-45	28	32K x 8 Fast Static RAM, 45 ns, ± C/E O/E		5962-8866204	/B	XA	1Q92		
6206-55	28	32K x 8 Fast Static RAM, 55 ns, ± C/E O/E		5962-8866203	/B	XA	1Q92		
6206-70	28	32K x 8 Fast Static RAM, 70 ns, ± C/E O/E		5962-8866202	/B	XA	1Q92		
6206-100	28	32K x 8 Fast Static RAM, 100 ns, ± C/E O/E		5962-8866201	/B	XA	1Q92		
6226-25	28	128K x 8 Fast Static RAM, 25 ns, ± C/E's O/E			/B	2Q92			
	32								TBD
6226-30	28	128K x 8 Fast Static RAM, 30 ns, ± C/E's O/E			/B	2Q92			
	32								TBD
6226-45	28	128K x 8 Fast Static RAM, 45 ns, ± C/E's O/E			/B	2Q92			
	32								TBD
6226-55	28	128K x 8 Fast Static RAM, 55 ns, ± C/E's O/E			/B	2Q92			
	32								TBD
6226-70	28	128K x 8 Fast Static RAM, 70 ns, ± C/E's O/E			/B	2Q92			
	32								TBD
6226-100	28	128K x 8 Fast Static RAM, 100 ns, ± C/E's O/E			/B	2Q92			
	32								TBD
6229-25	28	256K x 4 Fast Static RAM, 25 ns, ± C/E's O/E			/B	2Q92			
6229-25	32	256K x 4 Fast Static RAM, 25 ns, ± C/E's O/E			/B				TBD
6229-30	28	256K x 4 Fast Static RAM, 30 ns, ± C/E's O/E			/B	2Q92			
6229-30	32	256K x 4 Fast Static RAM, 30 ns, ± C/E's O/E			/B				TBD
6229-35	28	256K x 4 Fast Static RAM, 35 ns, ± C/E's O/E			/B	2Q92			
6229-35	32	256K x 4 Fast Static RAM, 35 ns, ± C/E's O/E			/B				TBD
6229-45	28	256K x 4 Fast Static RAM, 45 ns, ± C/E's O/E			/B	2Q92			
6229-45	32	256K x 4 Fast Static RAM, 45 ns, ± C/E's O/E			/B				TBD
6229-55	28	256K x 4 Fast Static RAM, 55 ns, ± C/E's O/E			/B	2Q92			
6229-55	32	256K x 4 Fast Static RAM, 55 ns, ± C/E's O/E			/B				TBD
6229-70	28	256K x 4 Fast Static RAM, 70 ns, ± C/E's O/E			/B	2Q92			
6229-70	32	256K x 4 Fast Static RAM, 70 ns, ± C/E's O/E			/B				TBD
6229-100	28	256K x 4 Fast Static RAM, 100 ns, ± C/E's O/E			/B	2Q92			
6229-100	32	256K x 4 Fast Static RAM, 100 ns, ± C/E's O/E			/B				TBD
6264-15	28	8K x 8 Fast Static RAM, 15 ns, ± C/E's		5962-3829419	/B	2Q92			
6264-15	32	8K x 8 Fast Static RAM, 15 ns, ± C/E's		5962-3829419	/B				2Q92
6264-25	28	8K x 8 Fast Static RAM, 25 ns, ± C/E's		5962-3829415	/B	2Q92			
6264-25	32	8K x 8 Fast Static RAM, 25 ns, ± C/E's		5962-3829415	/B				2Q92
6264-35	28	8K x 8 Fast Static RAM, 35 ns, ± C/E's		5962-3829413		MXA			
				5962-8552507	/B	XA			
6264-45	28	8K x 8 Fast Static RAM, 45 ns, ± C/E's		5962-3829411		MXA			
				5962-8552506	/B	XA			
62L64-15	28	8K x 8 Fast Static RAM, 15 ns, ± C/E's L/Pwr		5962-3829418	/B	2Q92			

NOTE: TBD (Based on Customer Demands)

Military Semiconductor Integrated Circuits

MEMORIES (continued)

JM38510/, SMD#, MIL-STD-883

High Speed CMOS III Static Memories						Package Type and Lead Finish			
Device	Pins	Description	JM38510/	SMD#	883	DIL	FP	CLCC	LCCC
62L64-15	32	8K x 8 Fast Static RAM, 15 ns, ± C/E's L/Pwr		5962-3829418	/B				2Q92
62L64-25	28	8K x 8 Fast Static RAM, 25 ns, ± C/E's L/Pwr		5962-3829414	/B	2Q92			
62L64-25	32	8K x 8 Fast Static RAM, 25 ns, ± C/E's L/Pwr		5962-3829414	/B				2Q92
62L64-35	28	8K x 8 Fast Static RAM, 35 ns, ± C/E's L/Pwr		5962-3829412		MXA			
				5962-8552508	/B	XA			
62L64-45	28	8K x 8 Fast Static RAM, 45 ns, ± C/E's L/Pwr		5962-3829410		MXA			
				5962-8552509	/B	XA			
62L64-45	28	8K x 8 Fast Static RAM, 45 ns, ± C/E's L/Pwr		5962-3829410		MXA			
				5962-8552509	/B	XA			
6268-15	20	4K x 4 Fast Static RAM, 15 ns, C/E			/B	2Q92			
					/B				2Q92
					/B		2Q92		
6268-25	20	4K x 4 Fast Static RAM, 25 ns, C/E			/B	2Q92			
					/B				2Q92
					/B		2Q92		
6268-35	20	4K x 4 Fast Static RAM, 35 ns, C/E		5962-8670503		RA	YA		XA
					/B	RA	YA		UA
6268-45	20	4K x 4 Fast Static RAM, 45 ns, C/E		5962-8670505		RA	YA		XA
					/B	RA	YA		UA
6268-55	20	4K x 4 Fast Static RAM, 55 ns, C/E		5962-8670507		RA	YA		XA
					/B	RA	YA		UA
6268-70	20	4K x 4 Fast Static RAM, 70 ns, C/E		5962-8670509		RA	YA		XA
					/B	RA	YA		UA
62L68-15	20	4K x 4 Fast Static RAM, 15 ns, C/E L/Pwr			/B	TBD			
					/B				TBD
					/B		TBD		
62L68-25	20	4K x 4 Fast Static RAM, 25 ns, C/E L/Pwr			/B	TBD			
					/B				TBD
					/B		TBD		
62L68-35	20	4K x 4 Fast Static RAM, 35 ns, C/E L/Pwr		5962-8670504		RA	YA		XA
					/B	RA	YA		UA
62L68-45	20	4K x 4 Fast Static RAM, 45 ns, C/E L/Pwr		5962-8870506		RA	YA		XA
					/B	RA	YA		UA
62L68-55	20	4K x 4 Fast Static RAM, 55 ns, C/E L/Pwr		5962-8870508		RA	YA		XA
					/B	RA	YA		UA
62L68-70	20	4K x 4 Fast Static RAM, 70 ns, C/E L/Pwr		5962-8870510		RA	YA		XA
					/B	RA	YA		UA
6287-35	22	64K x 1 Fast Static RAM, 35 ns, C/E		5962-8601501		XA			ZA
					/B	XA			UA
6287-45	22	64K x 1 Fast Static RAM, 45 ns, C/E		5962-8601503		XA			ZA
					/B	XA			UA
62L87-35	22	64K x 1 Fast Static RAM, 35 ns, C/E L/Pwr		5962-8601502		XA			ZA
					/B	XA			UA
62L87-45	22	64K x 1 Fast Static RAM, 45 ns, C/E L/Pwr		5962-8601504		XA			ZA

NOTE: TBD (Based on Customer Demands)

Military Semiconductor Integrated Circuits

MEMORIES (continued)

JM38510/, SMD#, MIL-STD-883

High Speed CMOS III Static Memories						Package Type and Lead Finish			
Device	**Pins**	**Description**	**JM38510/**	**SMD#**	**883**	**DIL**	**FP**	**CLCC**	**LCCC**
6288-15	22	16K x 4 Fast Static RAM, 15 ns, C/E			/B	1Q92			1Q92
6288-25	22	16K x 4 Fast Static RAM, 25 ns, C/E			/B	1Q92			1Q92
6288-35	22	16K x 4 Fast Static RAM, 35 ns, C/E		5962-8685924		TA			ZA
					/B	XA			UA
6288-45	22	16K x 4 Fast Static RAM, 45 ns, C/E		5962-8685922		TA			ZA
					/B	XA			UA
62L88-15	22	16K x 4 Fast Static RAM, 15 ns, C/E L/Pwr			/B	TBD			TBD
62L88-25	22	16K x 4 Fast Static RAM, 25 ns, C/E L/Pwr			/B	TBD			TBD
62L88-35	22	16K x 4 Fast Static RAM, 35 ns, C/E		5962-8685923		TA			ZA
					/B	XA			UA
62L88-45	22	16K x 4 Fast Static RAM, 45 ns, C/E		5962-8685921		TA			ZA
					/B	XA			UA
6290-15	24	16K x 4 Fast Static RAM, 15 ns, C/E, O/E			/B	2Q92			2Q92
6290-25	24	16K x 4 Fast Static RAM, 25 ns, C/E, O/E			/B	2Q92			2Q92
6290-35	24	16K x 4 Fast Static RAM, 35 ns, C/E, O/E		5962-8685918		LA			2Q92
					/B	XA			2Q92
6290-45	24	16K x 4 Fast Static RAM, 45 ns, C/E, O/E		5962-8685916		LA			2Q92
					/B	XA			2Q92
62L90-15	24	16K x 4 Fast Static RAM, 15 ns, C/E, O/E, L/Pwr			/B	TBD			TBD
62L90-25	24	16K x 4 Fast Static RAM, 25 ns, C/E, O/E, L/Pwr			/B	TBD			TBD
62L90-35	24	16K x 4 Fast Static RAM, 35 ns, C/E, O/E, L/Pwr		5962-8685917		LA			2Q92
					/B	YA			2Q92
62L90-45	24	16K x 4 Fast Static RAM, 45 ns, C/E, O/E, L/Pwr		5962-8685915		LA			2Q92
					/B	YA			2Q92

NOTE: TBD (Based on Customer Demands)

Military Semiconductor Integrated Circuits

8-BIT MICROPROCESSORS
16 AND 32-BIT MICROCONTROLLERS

NOTICE: *Military products are not necessarily pin-for-pin compatible with their commercial product counterparts. If there are any questions as to the compatibility please contact Product Marketing (602) 897-3782 for detailed information.*

JM38510/, SMD#, MIL-STD-883

8-Bit Microprocessors						Package Type and Lead Finish			
Device	**Pins**	**Description**	**JM38510/**	**SMD#**	**883**	**DIL**	**PGA**	**LCCC**	**CLCC**
6800	40	8-Bit Microprocessor			/B	QA			
6802	40	8-Bit Microprocessor with Clock and Optional RAM			/B	QA			
6809	40	8-Bit Microprocessor with Clock			/B	QA			
68A09	40	1.5 MHz 8-Bit Microprocessor with Clock			/B	QA			
68B09	40	2.0 MHz 8-Bit Microprocessor with Clock			/B	QA			
6821	40	8-Bit Peripheral Interface Adapter			/B	QA			
68A21	40	1.5 MHz 8-Bit Peripheral Interface Adapter			/B	QA			
68B21	40	2.0 MHz 8-Bit Peripheral Interface Adapter			/B	QA			
6840	28	Programmable Timer Module			/B	XA			
6845	40	CRT Controller			/B	QA			
68488	40	GPIA Support Module			/B	QA			
68A488	40	1.5 MHz GPIA Support Module			/B	QA			
68B488	40	2.0 MHz GPIA Support Module			/B	QA			
6850	24	Asynchronous Communications Interface Adapter			/B	JA			
68A50	24	1.5 MHz Asynchronous Communications Interface Adapter			/B	JA			
68B50	24	2.0 MHz Asynchronous Communications Interface Adapter			/B	JA			
6852	24	Synchronous Serial Data Adapter			/B	JA			
6854	28	Advanced Data-Link Controller			/B	XA			
6875A	16	6800 Clock Generator/Driver			/B	EA			

16 and 32-Bit Microprocessors						Package Type and Lead Finish			
Device	**Pins**	**Description**	**JM38510/**	**SMD#**	**883**	**DIL**	**PGA**	**LCCC**	**CLCC**
68000-8*	64	16-Bit external/32-Bit internal		8202102		YA			
	68			8202102			TA	ZA	UC
	64				/B	XA			
	68				/B		ZA	UA	YC
68000-8T*	68	16-Bit external/32-Bit internal		8202102				XA**	
					/B			UA**	

* [T_C = – 55° to +110°C]
** This device includes thermal pad(s).

Military Semiconductor Integrated Circuits

16 AND 32-BIT MICROCONTROLLERS

NOTICE: *Military products are not necessarily pin-for-pin compatible with their commercial product counterparts. If there are any questions as to the compatibility please contact Product Marketing (602) 897-3782 for detailed information.*

JM38510/, SMD#, MIL-STD-883

16 and 32-Bit Microprocessors						Package Type and Lead Finish			
Device	**Pins**	**Description**	**JM38510/**	**SMD#**	**883**	**DIL**	**PGA**	**LCCC**	**CLCC**
68000-10*	64	16-Bit external/32-Bit internal		8202103		YA			
	68			8202103			TA	ZA	UC
	64				/B	XA			
	68				/B		ZA	UA	YC
68000-10T*	68	16-Bit external/32-Bit internal		8202103				XA**	
					/B			UA**	
68020-16	114	32-Bit external and internal		5962-8603202			XA		
	132	32-Bit external and internal		5962-8603202	/B				YC
	114				/B		ZA		
68020-20	114	32-Bit external and internal		5962-8603203			XA		
	132	32-Bit external and internal		5962-8603203	/B				YC
	114				/B		ZA		
68020-25	114	32-Bit external and internal		5962-86032			3Q92		
	132	32-Bit external and internal		5962-86032	/B				2Q92
	114				/B		1Q92		
68030-16	128	32-Bit external and internal w/built-in PMMU		5962-8946401			XA		
	132	32-Bit external and internal w/built-in PMMU		5962-8946401	/B				YC**
	128				/B		ZA		
68030-20	128	32-Bit external and internal w/built-in PMMU		5962-8946402			XA		
	132	32-Bit external and internal w/built-in PMMU		5962-8946402	/B				YC**
	128				/B		ZA		
68030-25	128	32-Bit external and internal w/built-in PMMU		5962-8946403			XA		
	132	32-Bit external and internal w/built-in PMMU		5962-8946403	/B				YC**
	128				/B		ZA		
68030-33	128	32-Bit external and internal w/built-in PMMU		5962-8946404			XA		
	132	32-Bit external and internal w/built-in PMMU		5962-8946404	/B				YC**
	128				/B		ZA		
68040	179	32-Bit external and internal w/built-in PMMU and FPU		TBD	/B		3Q92		
	196	32-Bit external and internal w/built-in PMMU and FPU		TBD	/B				3Q92 /1
68881-16	68	Recommend 68882 for New Designs		5962-8602102			XA		YC
					/B		ZA		YC
68881-20	68	Recommend 68882 for New Designs		5962-8602103			XA		YC
					/B		ZA		YC
68882-16	68	Enhanced 16 MHz 32-Bit Floating Point		5962-89463			4Q91		4Q91
		Coprocessor			/B		ZA		YC
68882-20	68	Enhanced 20 MHz 32-Bit Floating Point		5962-89463			4Q91		4Q91
		Coprocessor			/B		ZA		YC
68882-25	68	Enhanced 25 MHz 32-Bit Floating Point		5962-89463			4Q91		4Q91
		Coprocessor			/B		ZA		YC
68882-33	68	Enhanced 33 MHz 32-Bit Floating Point		5962-89463			4Q91		4Q91
		Coprocessor			/B		ZA		YC

Note: /1 Parts are shipped in Non-Conductive Ring (Non-Lead Formed).

* [T_C = – 55° to +110°C]

** This device includes thermal pad(s).

16 AND 32-BIT MICROCONTROLLERS

NOTICE: *Military products are not necessarily pin-for-pin compatible with their commercial product counterparts. If there are any questions as to the compatibility please contact Product Marketing (602) 897-3782 for detailed information.*

JM38510/, SMD#, MIL-STD-883

16 and 32-Bit Microprocessors						Package Type and Lead Finish			
Device	**Pins**	**Description**	**JM38510/**	**SMD#**	**883**	**DIL**	**PGA**	**LCCC**	**CLCC**
68HC000-8	64	16-Bit external/32-Bit internal HCMOS MPU		5962-89462		4Q91			
	68	16-Bit external/32-Bit internal HCMOS MPU		5962-89462			4Q91	4Q91	4Q91
	64				/B	XA			
	68				/B		ZA	UA	YC
68HC000-10	64	16-Bit external/32-Bit internal HCMOS MPU		5962-89462		4Q91			
	68	16-Bit external/32-Bit internal HCMOS MPU		5962-89462			4Q91	4Q91	4Q91
	64				/B	XA			
	68				/B		ZA	UA	YC
68HC000-12	64	16-Bit external/32-Bit internal HCMOS MPU		5962-89462		4Q91			
	68	16-Bit external/32-Bit internal HCMOS MPU		5962-89462			4Q91	4Q91	4Q91
	64				/B	XA			
	68				/B		ZA	UA	YC
68HC001-8	68	Configurable 16-Bit or 8-Bit MPU		TBD	/B		2Q91		2Q91

Single Chip Microcontrollers						Package Type and Lead Finish			
Device	**Pins**	**Description**	**JM38510/**	**SMD#**	**883**	**DIL**	**PGA**	**LCCC**	**CLCC**
68HC11A0	48	8-Bit Microcontroller with 256 Bytes RAM		5962-9051001		XA			
	52	8-Bit Microcontroller with 256 Bytes RAM		5962-9051001	/B				YC
68HC11A1	48	8-Bit Microcontroller, 256 Bytes RAM & 512 Bytes EEPROM		5962-9051002	/B	XA			
	52	8-Bit Microcontroller, 256 Bytes RAM & 512 Bytes EEPROM		5962-9051002					YC
					/B				YC
68HC16Z1	132	16-Bit MCU, with Analog to Digital Converter			/B		4Q92		
68HC705C8	40	8-Bit Microcontroller with 8K EPROM			/B	2Q92			
68HC811E2	48	8-Bit Microcontroller with 2K EEPROM		5962-8952701	/B	XA			
	52	8-Bit Microcontroller with 2K EEPROM		5962-8952701	/B				YC
68332	132	32-Bit Microcontroller		5962-91501			1Q92		1Q92
68340	144	32-Bit MCU with DMA		Planned	/B		3Q92		3Q92

CONTROLLERS

Controllers						Package Type and Lead Finish			
Device	**Pins**	**Description**	**JM38510/**	**SMD#**	**883**	**DIL**	**PGA**	**LCCC**	**CLCC**
68442-8	68	Expanded DDMA Controller [T_C = –55°C to +110°C]		5962-8681101			XA		YC
					/B		ZA		YC
68605-10	84	X.25 Protocol Controller		Planned	/B		2Q92		TBD

NOTE: TBD (Based on Customer Demands)

Military Semiconductor Integrated Circuits

SINGLE CHIP MICROCONTROLLERS

NOTICE: *Military products are not necessarily pin-for-pin compatible with their commercial product counterparts. If there are any questions as to the compatibility please contact Product Marketing (602) 897-3782 for detailed information.*

JM38510/, SMD#, MIL-STD-883

DATA COMMUNICATIONS

Data Communications						Package Type and Lead Finish			
Device	Pins	Description	JM38510/	SMD#	883	DIL	PGA	LCCC	CLCC
68302	132	Integrated Multi-Protocol Processor		Planned	/B		2Q92		

MEMORY MANAGEMENT

Memory Management						Package Type and Lead Finish			
Device	Pins	Description	JM38510/	SMD#	883	DIL	PGA	LCCC	CLCC
68851-12	132	Recommend 68030 for New Designs			/B		ZA		
68851-16	132	Recommend 68030 for New Designs			/B		ZA		

DSP

DSP Digital Signal Processing						Package Type and Lead Finish			
Device	Pins	Description	JM38510/	SMD#	883	DIL	PGA	LCCC	CLCC
56001-20	88	56-Bit Digital Signal Processor		5962-8951201			XA		YC
	100	56-Bit Digital Signal Processor			/B		ZA		YC
96002-27	223	96-Bit Floating Point Digital Signal Processor		Planned			3Q92		3Q92
	TBD	96-Bit Floating Point Digital Signal Processor			/B		3Q92		3Q92

REDUCED INSTRUCTION SET COMPUTER (RISC)

RISC Reduced Instruction Set Computer						Package Type and Lead Finish			
Device	Pins	Description	JM38510/	SMD#	883	DIL	PGA	LCCC	CLCC
88100-20	180	32-Bit RISC		Planned			1Q92		
	200	32-Bit RISC		Planned					2Q92 /1
	180	32-Bit RISC			/B		4Q91		
	200	32-Bit RISC			/B				1Q92 /1
88100-33	180	32-Bit RISC		Planned			3Q92		
	200	32-Bit RISC		Planned					3Q92 /1
	180	32-Bit RISC			/B		2Q91		
	200	32-Bit RISC			/B				2Q92 /1
88200-20	180	16K Cache/Memory Management Unit		Planned			1Q91		
	200	16K Cache/Memory Management Unit		Planned					2Q92 /1
	180	16K Cache/Memory Management Unit			/B		4Q91		
	200	16K Cache/Memory Management Unit			/B				1Q92 /1
88200-33	180	16K Cache/Memory Management Unit		Planned			3Q92		
	200	16K Cache/Memory Management Unit		Planned					3Q92 /1
	180	16K Cache/Memory Management Unit			/B		2Q91		
	200	16K Cache/Memory Management Unit			/B				2Q92 /1

Note: /1 Parts are shipped in Non-Conductive Ring (Non-Lead Formed).

Military Semiconductor Discrete Products

Product Listing

Page

MIL-Qualified Products 6.3-2

MIL-Processed Products 6.3-4

Product Selection Guide

MIL-Qualified Products 6.3-5

- Power Transistors 6.3-5
- Small-Signal Transistors 6.3-7
- Diode Arrays 6.3-10
- Rectifiers 6.3-11

MIL-Processed Products 6.3-12

- Power Transistors 6.3-14
- Small-Signal Transistors 6.3-15
- Rectifiers 6.3-16
- Multiple Transistors 6.3-17
- Thyristors 6.3-18
- Chips 6.3-19

PRODUCT LISTING

MIL-QUALIFIED PRODUCTS

The following table lists Motorola-supplied devices which appear on the QPL-19500 list as JAN, JANTX, JANTXV and JANS qualified products. (Although Motorola will continue to supply components to JAN specifications where desired, this classification has been declared "inactive for new designs," per MIL-S-19500. The higher level JANTX classification is a recommended replacement.). As the detail specifications are being revised, JAN level is being removed. Consult your local sales office for specific JAN availability.

Type Number	Detailed Spec	Specification Levels			
		JAN	JTX	JTXV	JANS
Rectifiers					
1N3890,R	/304	X	X		
1N3891,R	/304	X	X		
1N3893,R	/304	X	X		
1N3910 through 1N3913	/308	X	X		
Diode Arrays					
1N5772	/474		X	X	
1N5774	/474		X	X	
1N6508	/474		X	X	
1N6509	/474		X	X	
TRANSISTORS					
Small Signal					
2N708	/312		X		
2N869A	/283		X		
2N918	/301	X	X	X	
2N930	/253	X	X		
2N2060	/270		X		X
2N2219A	/251	X	X	X	X
2N2222	/255	X	X		
2N2222A	/255	X	X	X	X
2N2369A	/317	X	X	X	X
2N2484	/376	X	X	X	X
2N2605	/354		X	X	X
2N2609	/296	X			
2N2904	/290		X		
2N2905A	/290	X	X	X	X
2N2906A	/291		X		
2N2907	/291	X	X		
2N2907A	/291	X	X	X	X
2N2920	/355	X	X	X	X
2N3013	/287		X		
2N3019S	/391	X	X	X	X
2N3227	/317		X		
2N3251A	/323	X	X		
Small-Signal					
2N3439	/368	X	X	X	
2N3440	/368		X	X	
2N3467	/348		X	X	
2N3486A	/392		X		
2N3501	/366	X	X	X	X
2N3506	/349		X	X	
2N3507	/349		X	X	

Type Number	Detailed Spec	Specification Levels			
		JAN	JTX	JTXV	JANS
TRANSISTORS					
Small-Signal					
2N3634 through 2N3637	/357		X	X	X
2N3700	/391	X	X	X	X
Power					
2N3715	/408		X		
2N3716	/408	X	X	X	
Small-Signal					
2N3735	/395		X		
2N3737	/395		X		
Power					
2N3739	/402		X		
2N3740	/441	X	X	X	
2N3741	/441	X	X	X	
Small-Signal					
2N3743	/397		X	X	
2N3764	/396		X	X	X
Power					
2N3766	/518		X		
2N3767	/518	X	X	X	
2N3792	/379	X	X	X	
Small-Signal					
2N3810	/336	X	X		X
2N3811	/336		X	X	X
2N3821	/375		X		
Power					
2N3867S	/350		X		
2N3868S	/350	X	X	X	
Small-Signal					
2N4033	/512	X	X	X	
2N4261	/511		X	X	
Power					
2N4399	/433		X	X	
Small-Signal					
2N4405	/448	X	X		
2N4416A	/428		X	X	

Product Listing (continued)

MIL-QUALIFIED PRODUCTS

Type Number	Detailed Spec	Specification Levels			
		JAN	JTX	JTXV	JANS
TRANSISTORS					
Small-Signal					
2N4449	/317		X		
2N4854	/421		X	X	
2N4856 through 2N4858	/385		X	X	
2N4931	/397		X	X	
TRANSISTORS					
Power					
2N5038	/439	X	X	X	
2N5039	/439		X		
2N5302	/456	X	X	X	
2N5303	/456		X	X	
2N5339	/560	X	X	X	
Small-Signal					
2N5416S	/485	X	X		
2N5582	/423	X	X		
Power					
2N5683	/466		X		
2N5684	/466	X	X	X	
2N5685	/464	X	X		
2N5686	/464	X	X	X	
2N5745	/433		X	X	
TRANSISTORS					
Small-Signal					
2N5794	/495		X		
2N5796	/496		X		
Power					
2N6051	/501		X	X	
2N6052	/501	X	X	X	
2N6058	/502		X		
2N6059	/502	X	X	X	
THYRISTORS					
2N6116	/493	X	X		
2N6118	/493	X	X		

Type Number	Detailed Spec	Specification Levels			
		JAN	JTX	JTXV	JANS
TRANSISTORS					
Power					
2N6193	/561	X	X	X	
2N6274	/514	X	X	X	
2N6277	/514		X	X	
2N6283	/504		X		
TRANSISTORS					
Power					
2N6284	/504	X	X	X	
2N6286	/505		X		
2N6287	/505		X	X	
2N6298	/540		X		
2N6299	/540	X	X	X	
2N6300	/539		X		
2N6301	/539	X	X	X	
2N6306	/498	X	X		
2N6308	/498		X		
2N6378	/515		X		
2N6379	/515		X		
2N6385	/523	X	X	X	
2N6437	/508	X	X	X	
2N6438	/508	X	X	X	
2N6546	/525		X		
2N6547	/525	X	X		
2N6650	/527	X	X	X	
2N6756	/542		X	X	
2N6758	/542		X	X	
2N6760	/542		X	X	
2N6762	/542		X	X	
2N6764	/543		X	X	
2N6766	/543		X	X	
2N6768	/543		X	X	
2N6770	/543		X	X	
Multiples					
2N6987	/558		X	X	
2N6988	/558			X	
2N6989	/559		X	X	
2N6990	/559			X	

Product Listing (continued)

MIL-PROCESSED PACKAGED PRODUCTS

The following type numbers represent standard part numbers that have been built and tested to MIL-S-19500 reliability specifications. For details, see page 6.1-15.

Type Number	Motorola Std Part Number	Specification Levels		
		JAN	JTX	JTXV
RECTIFIERS				
Schottky				
MBR030A			HX	HXV
MBR040A			HX	HXV
MBR5825	1N5825		HX	HXV
MBR6391	1N6391		HX	HXV
MBR6392	1N6392		HX	HXV
THYRISTOR				
MCR2323, A	2N2323, A	H		
TRANSISTORS				
Duals				
MD2219AF	2N2219A			HXV
MD2369A,AF	2N2369A		HX	HXV
MD2605, F	2N2605			HXV
MD2905AF	2N2905A			HXV
MD3251A	2N3251A		HX	HXV
MD3251AF	2N3251A			HXV
MD3468	2N3468		HX	HXV
MD3468F	2N3468			HXV
MD6002	MD6002		HX	HXV
MD6002F	MD6002			HXV
MD918	2N918		HX	HXV
TMOS				
MHM5N100			HX	HXV
MHM8N20			HX	HXV
MHM12N50			HX	HXV
MHM25N20			HX	HXV
MHM24N40			HX	HXV
MHM8P20			HX	HXV
Quads				
MHQ2369	2N2369A		HX	HXV
MHQ2484	2N2484		HX	HXV
MHQ3251A	2N3251A		HX	HXV
MHQ3468	2N3468		HX	HXV
MHQ6002	2N2222/2907		HX	HXV
MHQ918	2N918		HX	HXV
Bipolar Power				
MJ6316	2N6316		HX	HXV
MJ6318	2N6318		HX	HXV
MJ10016	MJ10016		HX	HXV
MJ11021	MJ11021		HX	HXV
MJ11022	MJ11022		HX	HXV
MJ11032	MJ11032		HX	HXV
MJ11033	MJ11033		HX	HXV
MJ12005	MJ12005		HX	HXV
Surface Mount				
MMCM918	2N918			HXV
MMCM2222A	2N2222A			HXV

Type Number	Motorola Std Part Number	Specification Levels		
		JAN	JTX	JTXV
Surface Mount				
MM2369A	2N2369A			HXV
MMCM2484	2N2484			HXV
MMCM2605	2N2605			HXV
MMCM2907A	2N2907A			HXV
MMCM3251A	2N3251A			HXV
Quads, Flat Packs				
MQ2369A	2N2369A			HXV
MQ2484	2N2484			HXV
MQ2605	2N2605			HXV
MQ3251A	2N3251A			HXV
MQ3468	2N3468			HXV
MQ6002	MQ6002			HXV
MQ918	2N918			HXV
RECTIFIERS				
MR836	MR836		HX	HXV
MR3910	1N3910		HX	HXV
MR3911	1N3911		HX	HXV
MR3913	1N3913		HX	HXV
TRANSISTORS				
RF				
MRF522	MRF522			HXV
MRF2857	2N2857		HX	HXV
MRF3960	2N3960		HX	HXV
MRF4957	2N4957		HX	HXV
MRF5583	2N5583		HX	HXV
MRF6603	2N6603			HXV
MRF6604	2N6604			HXV
RECTIFIERS				
Ultrafast				
MUR2515	MUR2515		HX	HXV
MUR5010	MUR5010		HX	HXV
MUR5020	MUR5020		HX	HXV
MUR6304	IN6304		HX	HXV
MUR6305	IN6305		HX	HXV
MUR6306	IN6306		HX	HXV
MUR1620C			HX	HXV
MUR1640C			HX	HXV
MUR1660C			HX	HXV
MUR3020C			HX	HXV
MUR3040C			HX	HXV
MUR3060C			HX	HXV
MUR840C			HX	HXV
MUR20200C			HX	HXV
MUR20100C			HX	HXV
MUR2060C			HX	HXV
MUR2045C			HX	HXV
MUR3045C			HX	HXV

MIL-QUALIFIED PRODUCTS

Motorola MIL qualified components are ordered by adding suffix JAN, JTX, JTXV or JANS to the part numbers indicated in the following tables. Although Motorola will continue to supply components to the JAN specification, this classification has been declared "inactive for new designs" per MIL-STD-19500. The higher level, JTX, is the recommended replacement.

CASE 79-04
TO-205AD (TO-39)

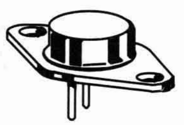

CASE 80-02
TO-213AA (TO-66)

Power Transistors

Bipolar

I_C Cont Amps Max	$V_{CEO(sus)}$ Volts Min	Device Type NPN	Device Type PNP	h_{FE} Min/Max	@ I_C Amp	t_{on}/t_{off} µs Max	$V_{CE(sat)}$ Max Vdc	@ I_C/I_B Amp	P_D(Case) Watts @ 25°C
TO-204AA/AE (Formerly TO-3)									
8	250	2N6306		15/75	3	0.6/3	0.8	3/0.6	125
	350	2N6308		Oct–52	3	0.6/3	1.5	3/0.6	125
10	60	2N3715	2N3791	50/150	1	—/2	1	5/0.5	150
	80	2N3716	2N3792	50/150	1	—/2	1	5/0.5	150
		2N6385#	2N6650	1k/20k	5	2.5/10	2	5/0.01	100**
12	80	2N6058#	2N6051#	1k/18k	6	2/10	2	6/0.024	150
	100	2N6059#	2N6052#	1k/18k	6	2/10	2	6/0.024	150
15	300	2N6546		6/—	10	1/4.7	5	15/3	175
	400	2N6547		6/—	10	1/4.7	5	15/3	175
20	75	2N5039		20/—	10	0.5/2	1	10/1	140
	80	2N5303		15/60	10	0.9*/1*	1	10/1	200
			2N5745	15/60	10	1.5*/1*	1	10/1	200
		2N6283#	2N6286#	1250/18k	10	2/10	2	10/0.04	175
	90	2N5038		20/—	12	0.5/2	1	12/1.2	140
	100	2N6284#	2N6287#	1250/18k	10	2/10	2	10/0.04	175
25	100		2N6437	30/120	10	0.5/1.25	1	10/1	200
	120		2N6438	30/120	10	0.5/1.25	1	10/1	200
30	60	2N5302		15/60	15	2*/1*	1	15/1.5	200
			2N4399	15/60	15	—/2.1	1	15/1.5	200
50	60	2N5685	2N5683•	15/60	25	1.5/3	1	25/2.5	300
	80	2N5686•	2N5684•	15/60	25	1.5/3	1	25/2.5	300
	100		2N6378•	30/120	20	0.5/1.05	1	20/2	250
	100	2N6274•		30/120	20	0.5/1.05	1	20/2	250
	120		2N6379•	30/120	20	0.5/1.05	1	20/2	250
	150	2N6277•		30/120	20	0.5/1.05	1	20/2	250

Darlington, • TO-204AE; all others TO-204AA

t_r^*/t_f^*

** P_D = 85 for devices 2N6648, 2N6649 and 2N6650.

Power Transistors, Bipolar (continued)

CASE 79-04
TO-205AD (TO-39)

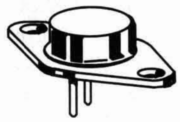

CASE 80-02
TO-213AA (TO-66)

I_C Cont Amps Max	$V_{CEO(sus)}$ Volts Min	Device Type		Resistive Switching			$V_{CE(sat)}$ @ Max Vdc	I_C/I_B A/mA	P_D(Case) Watts @ 25°C
		NPN	PNP	h_{FE} @ Min/Max	I_C Amp	t_{on}/t_{off} µs Max			
TO-205AA (Formerly TO-5)									
3	40		2N3867S	40/200	1.5	65*/100*	0.75	1.5/150	10
	60		2N3868S	30/150	1.5	65*/100*	0.75	1.5/150	10
TO-205AD (Formerly TO-39)									
5	100	2N5339	2N6193	60/240	2	100*/200*	0.7	2/200	1
TO-213AA (Formerly TO-66)									
1	300	2N3739		40/200	0.1	1.5/3.5	0.75	0.1/10	20
4	60		2N3740	30/120	0.25	0.4/1	0.4	0.25/25	25
		2N3766		40/160	0.5	0.25/2.5	1	0.5/50	25
	80		2N3741	30/120	0.25	0.4/1	0.4	0.25/250	25
		2N3767		40/160	0.5	0.25/2.5	1	0.5/50	25
8	60	2N6300#	2N6298#	750/18k	4	2/8	4	4/16	75+
	80	2N6301#	2N6299#	750/18k	4	2/8	4	4/16	75+

Darlington; + T_C = 0°C for devices 2N6300, 2N6301

t_r*/t_r*

MOSFETs (TMOS)

N-Channel — Case 1-06 TO-204AA (TO-3)						
$V_{(BR)DSS}$ (Volts) Min	$r_{DS(on)}$ @ (Ohms) Max	I_D (Amps)	Device	I_D (Amps) Max	C_{iss} pF Max	P_D* (Watts) Max
500	1.5	3	2N6762	4.5	800	75
	0.4	7.75	2N6770	12	3000	150
400	1	3.5	2N6760	5.5	800	75
	0.3	9	2N6768	14	3000	150
200	0.4	6	2N6758	9	800	75
	0.085	19	2N6766	30	3000	150
100	0.18	9	2N6756	14	800	75
	0.055	24	2N6764	38	3000	150

* @ 25°C

MIL-Qualified Products (continued)

Small-Signal Transistors, Bipolar

CASE 79-04
TO-205AD (TO-39)

CASE 22-03
TO-206AA (TO-18)

CASE 26-03
TO-206AB (TO-46)

CASE 27-02
TO-206AC (TO-52)

CASE 20-03
TO-206AF (TO-72)

General Purpose

Package	Device Number	$V_{(BR)CEO}$ Volts Min	I_C mA Max	h_{FE} Min	h_{FE} Max	@ I_C mA	$V_{CE(sat)}$ Volts Max	@ I_C/I_B mA
NPN								
TO-206AA (TO-18)	2N3700	80	1000	50	200	500	0.5	500/50
	2N2484	60	50	200	500	0.01	0.3	1.0/0.1
	2N2222A	50	800	75	325	1	1.2	150/15
	2N930	45	30	100	300	0.01	1	10/0.5
	2N2222	30	800	50	325	1	1.3	150/15
TO-205AD (TO-39)	2N3019S	80	1000	100	300	150	0.2	150/15
	2N2219A	50	800	100	300	150	0.3	150/15
TO-206AB (TO-46)	2N5582	50	800	100	300	150	0.3	150/15
PNP								
TO-206AA (TO-18)	2N2906A	60	600	40	120	150	0.4	150/15
	2N2907A	60	600	100	300	150	0.4	10/1.0
	2N3251A	60	200	100	300	10	0.25	10/1.0
	2N2907	40	600	100	300	150	0.4	150/15
T0-205AD (TO-39)	2N4033	80	1000	100	300	100	0.15	150/15
	2N4405	80	500	100	300	150	0.2	150/15
	2N2905A	60	600	100	300	1	0.4	150/15
	2N2904	40	600	40	120	1	0.4	150/15
TO-206AB (TO-46)	2N3486A	60	600	100	300	150	0.4	150/15
	2N2605	60	30	100	400	10	0.3	10/0.5

CASE 79-04

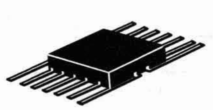

CASE 607-04

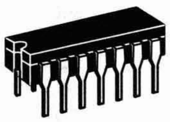

CASE 632-08

CASE 654-07

High-Frequency Amplifiers/Oscillators

The transistors shown are designed for use as both oscillators and amplifiers at UHF and VHF frequencies.

Package	Device Number	$V_{(BR)CEO}$ Volts Min	h_{FE} Min	@ I_C mA	G_{pe} dB Min	NF dB Max	@ f MHz	$\|h_{fe}\|$ Min	@ f MHz	C_{obo} pF Max
NPN										
TO-206AF	2N918	15	20	3	15	6	60	6	100	1.7
PNP										
TO-206AF	2N4261	15	30	10	—	—	—	15	100	2.5

Small-Signal Transistors, Bipolar (continued)

Switching Transistors

The following devices are intended primarily for use in general-purpose switching, but can be used in amplifier and driver applications. Within each package group shown, the devices are listed in order of decreasing turn-on time (t_{on}).

Package	Device Number	t_{on} ns Max	& t_{off} ns Max	@ I_C mA	$V_{(BR)CEO}$ Volts Min	I_C mA Max	h_{FE} Min	Max	@ I_C mA	$V_{CE(sat)}$ Volts Max	@ I_C mA	& I_B mA
NPN												
TO-206AA	2N914	40	40	200	15	150	30	120	10	0.3	10	1
	2N708	40	75	10	15	—	40	120	10	0.4	10	1
	2N2369A	12	18	10	15	200	40	120	10	0.2	10	1
	2N3227	12	18	10	20	200	100	300	10	0.2	10	1
TO-205AD	2N3735	—	60	1000	50	1500	20	80	1000	0.9	1000	100
	2N3506	30*	35*	1500	40	3000	40	200	1500	1	1500	150
	2N3507	30*	35*	1500	50	3000	30	150	1500	1	1500	150
	2N3737	—	60	1000	50	1500	20	80	1000	0.9	1000	100
TO-206AC	2N3013	15	25	300	20	300	35	120	30	0.18	30	3
	2N4449	12	18	10	15	200	40	120	10	0.2	10	1
PNP												
TO-206AA	2N869A	50	80	30	18	200	40	120	10	0.15	10	1
TO-205AD	2N3634	400	600	50	140	1000	50	150	50	0.6	50	5
	2N3635	400	600	50	140	1000	100	300	50	0.6	50	5
	2N3636	400	600	50	175	1000	50	150	50	0.6	50	5
	2N3637	400	600	50	175	1000	100	300	50	0.6	50	5
	2N4033	25*	35*	500	80	1000	100	300	100	0.15	150	15
	2N3467	30*	30*	500	40	1000	40	120	500	0.6	500	50
	2N4405	25*	50*	500	80	500	100	300	150	0.2	150	15
TO-206AB	2N3764	35*	35*	1	40	1500	30	120	1000	0.9	1000	100

t_r^*/t_f^*

High-Voltage/High-Current Transistors

This following table lists Motorola standard devices that have high Collector-Emitter Breakdown Voltage. Devices are listed in decreasing order of $V_{(BR)CEO}$ within each package type.

Package	Device Number	$V_{(BR)CEO}$ Volts Min	I_C mA Max	h_{FE} Min/Max	@ I_C mA	$V_{CE(sat)}$ Volts Max	@ I_C mA	& I_B mA
NPN								
TO-205AD	2N3439	350	1000	40/160	20	0.5	50	4
	2N3440	250	1000	40/160	20	0.5	50	4
	2N3501	150	300	100/300	150	0.4	150	15
PNP								
TO-205AD	2N5416S	350	1000	30/120	50	2	50	5
	2N3743	300	50	50/200	30	1.2	30	3
	2N4931	250	50	50/200	30	1.2	30	3
	2N3637	175	1000	100/300	50	0.6	50	5
	2N3636	175	1000	50/150	50	0.6	50	5
	2N3635	140	1000	100/300	50	0.6	50	5
	2N3634	140	1000	50/150	50	0.6	50	5

Small-Signal Transistors, Bipolar (continued)

Multiple Transistors (continued)

These multiple small-signal transistors include devices intended for amplifier and switching applications.

Device Number	Maximum Ratings V_{CEO} V	I_C mA	P_D(Total) W	Electrical Characteristics I_{CBO} µA Max	h_{FE} Min/Max	@ I_C mA	$V_{CE(sat)}$ Volts Min	@ I_C mA	& I_B mA
QUAD — NPN Case 632-02		t_r•/t_f•							
2N6989	50	800	1.5	0.01	100/300	150	0.3	150	15

Device Number	Maximum Ratings V_{CEO} V	I_C mA	P_D(Total) W	Electrical Characteristics I_{CBO} µA Max	h_{FE} Min/Max	@ I_C mA	$V_{CE(sat)}$ Volts Min	@ I_C mA	& I_B mA
Case 607-04									
2N6990	50	800	0.4	0.01	100/300	150	0.3	150	15
QUAD — PNP Case 632-02									
2N6987	60	600	1.5	0.01	100/300	150	0.4	150	15
Case 607-04									
2N6988	60	600	0.4	0.01	100/300	150	0.4	150	15
DUAL — NPN Case 654-07									
2N2060	60	500	0.5	0.002	30/90	0.1	0.3	0.5	5
2N3819	60	30	0.5	0.002	300/1000	0.1	0.3	1	0.1
2N3820	60	30	0.5	0.002	150/600	0.1	0.3	1	0.1
2N3810	60	50	0.6	0.01	150/450	0.1	0.2	0.1	0.1
2N3811	60	50	0.6	0.01	300/900	0.1	0.2	0.1	0.1
2N4854	40	600	0.6	0.01	100/300	150	0.4	150	15
2N5794	40	600	0.6	0.01	100/300	150	0.6	150	15
2N5796	60	600	0.6	0.02	100/300	150	0.4	150	15

Small-Signal Transistors, JFETs

Amplifiers, TO-206AF

Device	$\lvert Y_{fs} \rvert$ (µmho) Min	@ f (kHz)	$\lvert Y_{os} \rvert$ (µmho) Min	@ f (kHz)	C_{iss} (pF) Max	C_{rss} (pF) Max	NF (dB) Max	@ R_G=1 MΩ f (kHz)	$V_{(BR)}$ (V) Min	$V_{GS(off)}$ (V) Min	$V_{GS(off)}$ (V) Max	I_{DSS} (mA) Min	I_{DSS} (mA) Max
N-Channel													
2N3821	1500	1	10	1	6	3	2.5	0.01	50	—	4	0.5	2.5
2N4416A	4500	1	50	1	4	0.8	4	400	35	2.5	6	5	15

Switches and Choppers, TO-206AA — N-Channel

Device	$r_{ds(on)}$ (Ω) Max	@ I_D mA	$V_{GS(off)}$ (V) Min	$V_{GS(off)}$ (V) Max	I_{DSS} (mA) Min	I_{DSS} (mA) Max	$V_{(BR)}$ (V) Min	C_{iss} (pF) Max	C_{rss} (pF) Max	t_{on} (ns) Max	t_{off} (ns) Max
2N4856	25	0	4	10	50	—	40	18	8	6	25
2N4857	40	0	2	6	20	100	40	18	8	6	50
2N4858	60	0	0.8	4	8	80	40	18	8	10	100

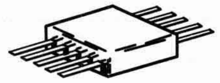

CASE 606-04
(TO-91)

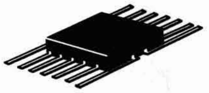

CASE 607-04

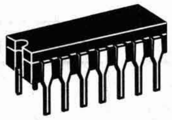

CASE 632-08

DIODE ARRAYS — Available in HX or HXV classification.

Schematic Diagrams

1

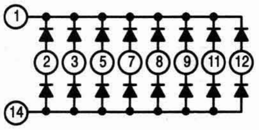

2

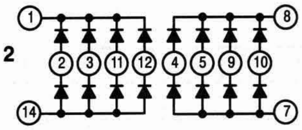

NC Pin 6, 13

Device Number	$V_{(BR)R}$ Vdc	I_R μAdc	V_F Vdc	t_{fr} ns	t_{rr} ns	P_D mW	Figure	Package	Description
1N5772	60	0.1	1	40	20	500		606-0	16 DIODES, C.A./C.C.
1N5774	60	0.1	1	40	20	500	6	607-0	16 DIODES, DUAL C.A./C.C.
1N6508	60	0.1	1	40	20	500	1	632-0	16 DIODES, C.A./C.C.
1N6509	60	0.1	1	40	20	500	6	632-0	16 DIODES, DUAL C.A./C.C.

MIL-Qualified Products (continued)

Rectifiers

Fast recovery power rectifiers providing high efficiency at frequencies up to 250 kHz. R-suffix indicates reverse polarity. All are available with JAN and JTX classification.

Device Number	V_{RRM} V Max	I_O A Max	I_{FSM} A Max	V_F V Max	I_R µA Max	t_{rr} ns Max	Package
1N3890, R	100	12	200	1.4	25	200	DO-203AA
1N3891, R	200						
1N3893, R	400						
1N3910	100	30	300	1.4	25	200	DO-203AB
1N3911	200						
1N3913	400						

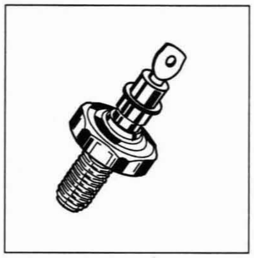

CASE 56-03
DO-203AA
(DO-4)

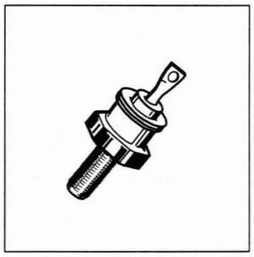

CASE 257-01
DO-203AB
(DO-5)

CASE 22-03
TO-206AA
(TO-18)

Programmable Unijunction Transistors — PUT (Not Recommended For New Design)

Similar to UJTs, except that I_V, I_P and intrinsic standoff voltage are programmable (adjustable) by means of external voltage divider. This stabilizes circuit performance for variations in device parameters. General operating frequency range is from 0.01 Hz to 10 kHz, making them suitable for long-duration timer circuits. Available with JAN & JTX classifications.

Device Number	I_P R_G = 10 kΩ µA Max	I_P R_G = 1 MΩ µA Max	I_{GAO} @ 40 V nA Max	I_V R_G = 10 kΩ µA Max	I_V R_G = 1 MΩ µA Max	Package
2N6116	5	2	5	70	50	TO-206AA
2N6118	1	0.15	5	50	25	

MIL-PROCESSED DISCRETE SEMICONDUCTORS

The wide range of component requirements for today's high-technology military and space applications often go beyond the available MIL-S-19500-specified component complement. Normally, these needs are met with devices manufactured and tested to a customer's high-reliability specifications developed specifically for these custom parts. The result — high initial cost and long delivery time.

To reduce both of these detriments, Motorola now offers a standard, inventoried line of popular discrete products for which no military specifications exist, but which have been processed to rigid MIL-S-19500 and MIL-STD-750 specifications, just as if they were built for JAN registration. Since no military slash sheets exist for these components, the electrical parameters are those applied to equivalent Motorola commercial products. Delta calculations, however, and Group B and C test limits, are selected with the same considerations as for MIL-S-19500 specifications

Compared with custom equivalents, customers able to utilize these components will find significant savings in both cost and delivery time. Moreover, the life span of such devices will be considerably longer than that of custom-built "specials", so that replacements will be available for the foreseeable future.

Parts Identification and Marking

For its packaged Military Processed Components, Motorola will use only hermetically sealed commercial products capable of being processed to MIL-S-19500 requirements. For identification, the products will have a prefix similar to those presently used for internal (non-EIA-registered) devices, e.g. MM, MHM, MRF, MCR etc., followed by the standard EIA or internal part number, and special JAN equivalent suffixes. The suffixes, HX, HXV and HS signify testing to JANTX, JANTXV and JANS respectively.

MIL-Processed devices will be marked with the Motorola Logo, the in-house part number and a four digit date code. Should a DESC Drawing become available, the DESC Drawing part number will also be marked. (Presently, no DESC Drawing specifications exist for any of these devices.) Re-marking is not available, due to permanency of the marking.

Should fully qualified JAN equivalents become available, Motorola will discontinue the MIL-Processed Devices unless there is a technical problem with supplying the JAN qualified device. In such cases the MIL-Processed devices will be retained and a detailed list of variations from the JAN equivalent will be provided.

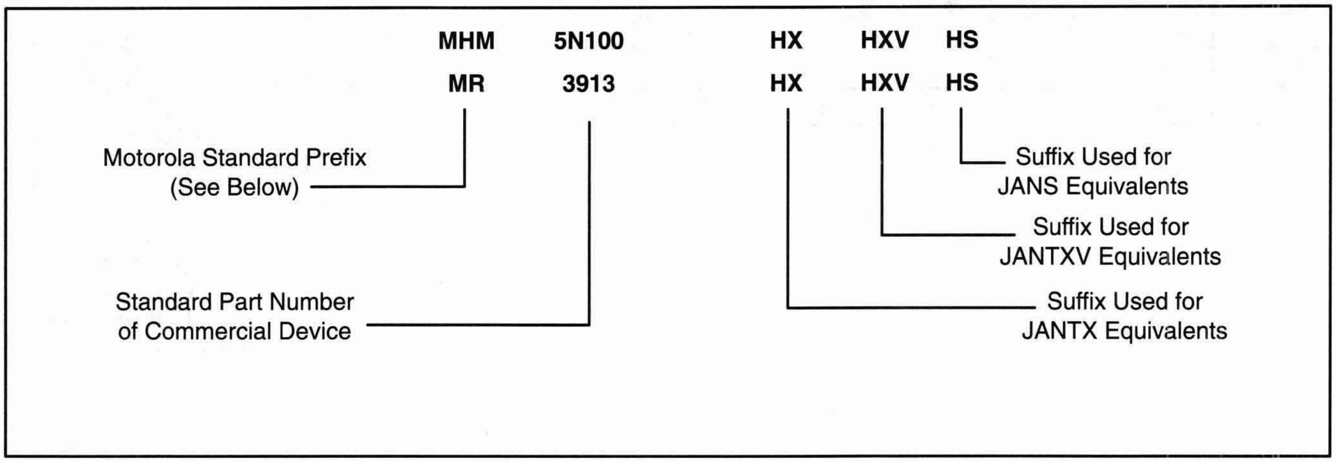

Motorola Standard Prefixes

- MAD — Diode Arrays
- MBR — Rectifiers
- MCR — Thyristors
- MD — Dual Transistors (Bipolar)
- MFE — Transistors, Field Effect
- MHM, MHT — Transistors, TMOS
- MHQ — Quad Transistors (Bipolar)
- MJ — Transistors, Bipolar Power
- MJM — Transistors, Bipolar Power, TO-254
- MM — Transistors, Small-Signal
- MR — Rectifiers
- MRF — Transistors, RF
- MUR — Rectifiers
- MWA — Circuit, RF

JAN-Type Processing for Commercial Products

MIL-Processed devices will receive the following screens, tests and inspections

Processing	Specification	Lot
HX Level, (JAN TX Equivalent) —		
High Temperature Non-operating Life	MIL-STD-750, Method 1032	Optional
Temperature Cycle	MIL-STD-750, Method 1051	100%
Surge (Rectifiers) when specified	MIL-STD-750, Method 4066	100%
Thermal Response when specified	MIL-STD-750, Method 3101-61	100%
Constant Acceleration	MIL-STD-750, Method 2006	Optional
Hermetic Seal Fine Leak, Condition G or H Gross Leak, Condition A, C, D ,E or F	MIL-STD-750, Method 1071	100%
Interim Electrical Measurements	As Specified, when required	100%
High Temperature Reverse Bias Condition A	MIL-STD-750, Method 1039/9/42	
Interim Electrical Measurements	As specified, parameters as required	100%
Power Burn-in	MIL-STD-750, Method 1038/9/40/2	100%
Electrical Measurements, Delta Calculations	Parameters as Required	100%
Electrical Measurements	Subgroup A2 only	100%
Group A Inspection	MIL-S-19500	Sample
Group B Inspection	MIL-S-19500	Sample
Group C Inspection*	MIL-S-19500	Sample
HXV Level, (JAN TXV Equivalent) — Devices will receive all Level HX tests, plus Precap Visual Inspection	MIL-STD-750, Method 2069-74	100%
HS Level, (JAN S Equivalent) —	Contact your Motorola Sales representative for processing details	

* Group C inspection will be run on the initial lot only. Data will be retained for seven years.

MIL-Processed Semiconductors (continued)

SELECTOR GUIDE
POWER TRANSISTORS

TMOS FETs

These TMOS Power FETs are designed for high speed power switching applications such as switching regulators, converters, solenoid and relay drivers, and PWM motor controls.

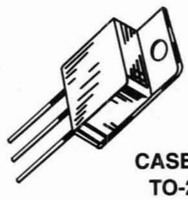

CASE 387-01
TO-254AA

Device Number	Maximum Ratings			Electrical Characteristics					
	V_{DSS} Vdc	I_D A	P_D W	I_{DSS} mA Max	$r_{DS(On)}$ Ohms Max	@ I_D Adc	$V_{GS(th)}$ Vdc Min/Max	$t_{d(on)}$ ns Max	$t_{d(off)}$ ns Max
TO-254AA Package N-Channel									
MHM5N100HX, HXV	1000	5	125	0.2	3	2.5	2/4.5	40	160
MHM8N20HX, HXV	200	8	75	0.2	0.4	4	2/4.5	40	200
MHM12N50HX, HXV	500	12	125	0.2	0.4	7	2/4.5	40	150
MHM25N20HX, HXV	200	25	125	0.2	0.1	12.5	2–Feb	40	150
P-Channel									
MHM8P20HX, HXV	200	8	75	0.2	0.4	4	2/4.5	40	200

CASE 1-07
TO-204AA
(TO-3)

CASE 80-02
TO-213AA
(TO-66)

Bipolar, Low Frequency

Device Number	Maximum Ratings			Electrical Characteristics					
	V_{CEO} Adc	I_C Adc	P_D W	h_{FE} Min/Max	@ I_C mA	t_r/t_f µs Max	@ I_C Adc	$V_{CE(sat)}$ Vdc Max	f_T MHz Min
TO-204AA/AE Package NPN									
MJ10016HX, HXV	120	30	200	200/—	30	—	—	4	—
MJ11022HX, HXV	250	15	175	400/15000	10000	1.2/10	10	2	3
MJ11032HX, HXV	120	50	300	400/—	50	—	—	3.5	—
MJ12005HX, HXV	750	8	100	Not Specified		—/1	5	5	—
PNP									
MJ11021HX, HXV	250	15	175	400/15000	10000	1.2/10	10	2	3
MJ11033HX, HXV	120	50	300	400/—	50	—	—	3.5	—
TO-213AA Package NPN									
MJ6316HX, HXV	80	7	90	20/100	2.5	0.7/0.8	2.5	1	4
PNP									
MJ6318HX, HXV	80	7	90	20/100	2.5	0.7/0.8	2.5	1	4

MIL-Processed Semiconductors (continued)

SMALL-SIGNAL TRANSISTORS

CASE 79-04
TO-205AD
(Formerly TO-39)

CASE 22-03
TO-206AA
(Formerly TO-18)

CASE 26-03
TO-206AB
(Formerly TO-46)

CASE 20-03
TO-206AF
(Formerly TO-72)

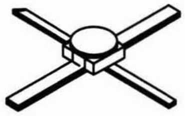
CASE 303-01

Bipolar, RF

Device Number	Maximum Ratings			Electrical Characteristics								Package
	V_{CEO} Vdc	I_C mA	P_D W	I_{CBO} µAdc Max	h_{FE} Min/Max	f_T GHz Min/Max	@ I_C mA	NF dB Min/Max	@ f MHz	G_{PE} dB Min/Max	@ f MHz	
NPN												
MRF2857HX, HXV	15	40	0.3	—	30/150	—	3	–/4.5	450	12.5/21	450	CASE 303-01
MRF5109HX, HXV	20	400	1	—	40/150	—	50	–/3.5	200	11/–	200	CASE 205AD
MRF6603HX, HXV	15	30	0.3	—	30/200	—	15	1/2.5	1000	15/21	1000	CASE 303-01
MRF6604HXV	15	50	0.5	0.05	30/200	—	—	3	1000	15	1000	CASE 303-01
PNP												
MRF522HXV	10	50	—	10	25/125	—	0	3.5	1000	10	1000	CASE 303-01
MRF4957HX,HXV	30	30	0.2	0.1	30/165	1.2	2(I_E)	3.5	450	17	450	TO-206AF
MRF5583HX,HXV	30	500	5	0.05	25/100	1	40	—	—	—	—	TO-205AD

CASE 56-03 DO-203AA (DO-4)	CASE 257-01 DO-203AB (DO-5)	CASE 51-02 Glass DO-204AA (DO-7)

RECTIFIERS — All are available with HX and HXV classifications.

Device Number	Maximum Rating			Electrical Characteristics						Package
	I_O Amps	V_{RRM} Volts	I_{FSM} Amps	V_F Volts Max @	I_F Amps	I_R µA Max @	V_R Volts	t_{rr} µs Max @	I_F Amps	
Fast Recovery										
MR836HX,HXV	3	600	100	1.1	3	500	600	0.2	1	CASE 60-01
MR3910HX,HXV	30	100	300	1.4	30	25	100	0.2	1	DO-203AB
MR3911HX,HXV		200	300	1.4	30	25	200	0.2	1	
MR3913HX,HXV		400	300	1.4	30	25	400	0.2	1	
Ultrafast Recovery										
MUR2515HX,HXV	25	150	500	0.95*	25*	10	150	0.05	1	DO-203AA
MUR5010HX,HXV	50	100	600	1.15	50	10	100	0.05	1	DO-203AB
MUR5020HX,HXV	50	200	600	1.15	50	10	200	0.05	1	DO-203AB
MURM1620CTHX,V	16	200	100	0.975	8	5	200	0.035	1	TO-254AA
MURM1640CTHX,V	16	400	100	1.3	8	10	400	0.06	1	TO-254AA
MURM1660CTHX,V	16	600	100	1.5	8	10	600	0.06	1	TO-254AA
MURM3020HX,V	30	200	150	1.05	15	10	200	0.035	1	TO-254AA
MURM3040HX,V	30	400	150	1.25	15	10	400	0.06	1	TO-254AA
MURM3060HX,V	30	600	150	1.5	15	10	600	0.06	1	TO-254AA
MUR5010HX,V	50	100	600	1.15	50	10	100	0.05	1	DO-5
MUR5020HX,V	50	200	600	1.15	50	10	200	0.05	1	DO-5
Schottky										
MBR5825HX,HXV	15	40	500	0.38	5	10000	40	—	—	CASE 60-01
MBR6391HX,HXV	35	45	600	0.68*	50*	1500*	45*	—	—	DO-203AA
MBR6392HX,HXV	60	45	800	0.78*	65*	70*	45*	—	—	DO-203AB
MBRM2045CTHX,V	20	45	150	0.8	10	150	45	—	—	TO-254AA
MBRM2060CTHX,V	20	60	150	0.8	10	150	60	—	—	TO-254AA
MBRM20100CTHX,V	20	100	150	0.8	10	150	100	—	—	TO-254AA
MBRM20200CTHX,V	20	200	150	0.8	10	150	200	—	—	TO-254AA
MBRM3045CTHX,V	30	45	200	0.6	20	1000	45	—	—	TO-254AA

* = Instantaneous Values, e.g. vF(pk) @ iF(pk) and iR(pk) @ vR(pk)

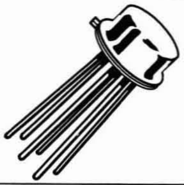

CASE 654
(TO-78)

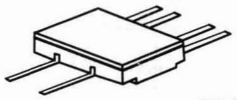

CASE 610A-04

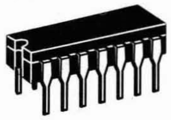

CASE 632-08

MULTIPLE TRANSISTORS

Bipolar

Multiple transistors are multi-chip devices with two (duals) or four (quads) chips in a single package. The transistors are signal devices intended for switching and amplifier applications.

Device Number	Maximum Ratings			Electrical Characteristics						Package
	V_{CEO} Vdc	I_C mA	P_D* W	I_{CBO} µAdc Max	h_{FE} Min/Max	@ I_C mA	$V_{CE(sat)}$ Volts Max	@ I_C mA	& I_B mA	
DUALs — NPN										
MD2219AFHXV	50	800	0.0046	0.01	100/300	150	0.3	150	15	610A
MD2369AHX, HXV	15	200	0.36	0.02	40/120	10	0.02	10	1	654
MD2369AFHXV	15	200	0.36	0.02	40/120	10	0.02	10	1	610A
MD918HX, HXV	15	50	0.2	0.01	20/200	3	0.4	10	1	654
MD918FHXV	15	50	0.2	0.01	20/200	3	0.4	10	1	610A
DUALS — PNP										
MD2905AFHXV	60	600	0.6	0.01	100/300	150	0.4	150	15	610A
MD3251AHX, HXV	60	50	0.625	0.02	100/300	10	0.25	10	1	654
MD3251AFHXV	60	50	0.4	0.02	100/300	10	0.25	10	1	610A
MD3468HX,HXV	50	1000	0.65	0.1	25/75	500	0.3	150	15	654
MD3468FHXV	50	1000	0.4	0.1	25/75	500	0.3	150	15	610
DUALS — NPN/PNP										
MD6002HX, HXV	30	500	0.625	0.02	100/300	150	0.4	150	15	654
MD6002FHXV	30	500	0.625	0.02	100/300	150	0.4	150	15	610
QUADs — NPN										
MHQ2484HX, HXV	60	50	2	0.005	200/500	0.01	0.3	1	0.1	632
MQ2484HXV	60	50	0.6	0.005	200/500	0.01	0.3	1	0.1	607
MHQ2369HX, HXV	15	500	1.5	0.2	40/120	10	0.2	10	1	632
MQ2369AHXV	15	500	0.6	0.2	40/120	10	0.2	10	1	607
MHQ918HX, HXV	15	50	1.6	0.01	20/200	3	0.4	10	1	632
MQ918HXV	15	50	0.4	0.01	20/200	3	0.4	10	1	607

* All die, equal power

Bipolar (continued)

Device Number	Maximum Ratings			Electrical Characteristics						Package
	V_{CEO} Vdc	I_C mA	P_D* W	I_{CBO} µAdc Max	h_{FE} Min/Max	@ I_C mA	$V_{CE(sat)}$ Volts Max	@ I_C mA	& I_B mA	
QUADS–PNP										
MHQ3251AHX, HXV	60	200	1.5	0.02	100/300	10	0.25	10	1	632
MQ3251AHXV	60	200	0.6	0.02	100/300	10	0.25	10	1	607
MHQ3468HX, HXV	50	1000	2	0.1	25/75	500	0.35	150	15	632
MQ3468HXV	50	1000	0.6	0.1	25/75	500	0.35	150	15	607
QUADS–NPN/PNP										
MHQ6002HX, HXV	30	500	1.9	0.02	100/300	150	0.4	150	15	632
MQ6002HXV	30	500	0.6	0.02	100/300	150	0.4	150	15	607

* All die, equal power

THYRISTORS — SCRs

Device Number	V_{DRM} V Max	$I_{T(RMS)}$ A Max	I_{DRM} µA	V_{TM} V Max	I_{GT} µA Max	V_{GT} V Max	I_H mA Max	T_J °C Min/Max	Package
MCR2323H/AH	50	1.6	10	1.5	200	0.8	2	–0.52	TO-205AD (TO-39)

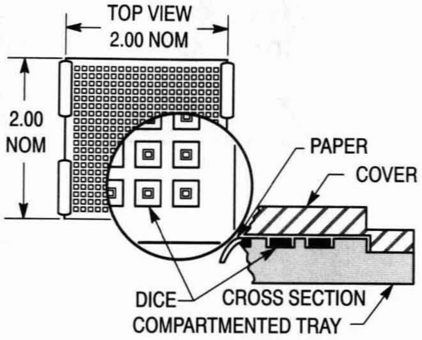

Figure 1. MIL-tested discrete semiconductor chips are now available off the shelf for high reliability hybrid (multi-chip) circuits.

DISCRETE MILITARY OPERATION CHIPS

Motorola's inventory of discrete military products qualified to JAN, JANTX, JANTXV and JANS specifications currently covers many devices listed on the QPL. From these, and from key internal product lines Motorola has designated a comprehensive selection of components in unencapsulated (chip) form to undergo stringent military type testing in order to serve the needs of customers manufacturing hybrid circuits for military and other high reliability applications. The chips are carried in stock by Motorola and by a number of authorized chip resellers, thereby avoiding much of the delay and some of the cost associated with the development of custom products for special applications. The chip line encompasses some of the most popular part numbers from various product categories and is expected to satisfy a substantial portion of a hybrid manufacturer's discrete chip requirements.

Presently the proposed Revision H of MIL-S-19500 includes Appendix H, which identifies a new level of military device, the JAN C chip. The Motorola DMO high reliability chips exceed the new JAN C chip. Since the JAN C device will be a standard, it will become the preferred chip for all military programs.

Chip Identification

For identification, all Motorola MIL-tested chips will carry the part numbers of their encapsulated counterpart, except for the prefix. For EIA-registered devices, instead of the 1N or 2N prefixes the MIL-tested chips will be labelled 1C and 2C. For Motorola internal part numbers, the letter "C" will be added to the standard internal part number prefix.

Chips processed to JANTXV type specifications are further identified by the suffix "HV" added to the chip part number. Additional processing to JANS type specifications (suffix "HS") can be initiated routinely through advance communications with any Motorola sales office. Examples:

Standard Part Numbers	Equiv. MIL-Tested Part Numbers
2N2222A	2C2222AHV (or HS)
MZ2.4A	MZC2.4AHV (or HS)

Chip Qualification

Chips to be used in military and other high-reliability applications are tested to conform to the following military specifications where applicable:

MIL-C-45662 Calibration System Requirements
MIL-L-45208 Inspection System Requirements
MIL-STD-750 Test Methods for Semiconductors

To qualify, individual chips are probe tested to guarantee conformance with the dc parameters corresponding to those on the military slash sheets. Parts not covered by military specifications will be tested to Motorola data sheet electricals and MIL-S-19500 will be used as a guide.

Table 1 describes the test capabilities for discrete chip probing.

Parameters which cannot be tested in probe will be tested on encapsulated devices on a sample basis for quality conformance. Table 2 details the tests performed on the chips, as well as those performed on encapsulated Lot Acceptance Test Samples (LATS).

Table 1. Probe Test Capabilities

Parameter	Test Conditions	Limits
Breakdown Voltages	10 µA to150 mA	0 to 2000 V
Leakage Currents	0 to 2000 V	10 nA to 175 mA
Current Gain (hFE)	100 µA to 30 A	0 to 20 V
Saturation and "On" Voltages	100 µA to 30 A	0 to 10V
Forward Voltages	0 to 30 A	0 to 10 V

Table 2. JANTXV Process Flow for Motorola Discrete Military Products Chips

Processing	Chips	LATS*
Electrical Probe, +25°C DC Only	100%	100%
Wafer Saw-Through	100%	100%
Visual Inspection MIL-STD-750, Method 2072 or 2073	100%	100%
Assemble in Applicable Package	—	See Table 3
In-Package Tests	—	100%
High Temperature Storage MIL-STD-750, Method 1032	—	100%
Hermetic Seal Fine and Gross Leaks MIL-STD-750, Method 1071	—	100%
Serialization	—	100%
Electrical Parameters Read and Record, Group A Only	—	100%
High Temperature Reverse Bias (HTRB) MIL-STD-750, Method 1039, Cond. A Transistors Only	—	100%
Delta Calculations for HTRB Read and Record	—	100%
Burn-In, High Power MIL-STD-750, Method 1039, Cond. B, Transistors Method 1038, Cond. B, Diodes	—	100%
Delta Calculations for Burn-In Read and Record	—	100%
Final Electrical Parameters Read and Record	—	100%
Bond Pull & Die Shear MIL-STD-750, Method 2017 & 2037	—	5 Devices

* LATS = Lot Acceptance Test Samples.

Lot Acceptance Criteria

For lot acceptance tests, transistor die will be mounted in applicable TO-18, TO-205AD (TO-39), TO-204AA/AE (TO-3) packages and zener diode chips will be mounted in TO-18 packages.

In cases where there are more than 2500 chips on a wafer, a lot will consist of only one wafer and sample chips to be used for packaged devices will be selected randomly and uniformly from across the wafer. For larger die, with less than 2500 chips per wafer, samples will be selected from more than one wafer and traceability will be to the wafer lot.

Table 3 lists the lot acceptance criteria for various size chips.

Table 3. Lot Acceptance Criteria

Average Number of Electrically Good Die Per Wafer	Minimum Sample Size	Limits
Over 2500	77	LTPD = 5 Acceptance No. C = 1
1000 to 2499	55	LTPD = 7 C = 1
2 to 999	38	LTPD = 10 C = 1

For devices with more than 2500 die per wafer, QCI will be performed on each wafer.

Packaging

Motorola supplies all discrete semiconductor chips in the industry standard multi-pak. This is a 2" x 2" waffle type carrier with separate compartments for each die, Figure 1. The dice are covered with filter papers aligned with the top edge of the tray. The multi-pak itself is conductive, or covered with conductive material, to reduce the danger of damage to the die from electro-static discharge. For die 30 mil square or smaller, there will be 400 chips in each waffle pack. For a progressively larger die, waffle packs with 100, 49 and 25 chip compartments will be used. The waffle pack will be enclosed in a dry nitrogen filled or vacuum packed conductive bag and each waffle pack will contain chips from only one wafer. All will contain the following information:

Motorola Logo
Device Part Number
Inspection Lot Number (Wafer Number)
Date Code (Assembly Date of the LATS)
ESD Symbol as applicable, per MIL-STD-1285

Handling and Storage

When removing the cover from the waffle pack, the die may have a tendency to stick to the paper insert between the top cover and the tray. To resolve this problem, Figure 2, place the cover upside-down on the tray and apply light finger pressure to the cover. Then using tweezers. slide the paper from between the tray and the cover.

Chips should be stored at room temperature in an inert environment. Special electrostatic discharge (ESD) precautions should be taken to avoid chip damage. Storage in the original shipping package is recommended.

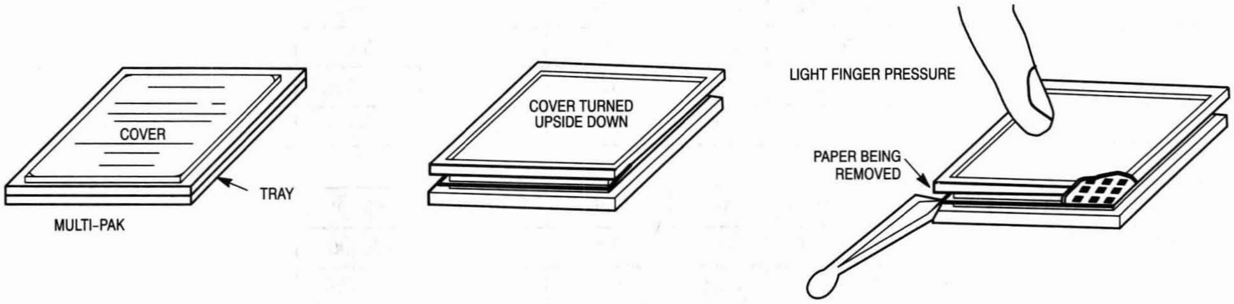

Figure 2. Care in removing the filter paper from the multi-pak will prevent loss of chips adhering to the paper.

SELECTOR GUIDE

The following tables list the various Motorola DMO chips first by specific product categories and then in a logical fashion that permits rapid comparison of the more important design specifications.

TRANSISTORS

Power, Bipolar — Listed in order of increasing Collector Current, I_C (continued)

Device Number										
NPN	PNP	I_C Adc Max	$V_{CEO(sus)}$ Vdc Min	h_{FE} Min/Max	@ I_C Adc	t_{on}/t_{off} µs Max	t_r/t_f µs Max	@ I_C A	h_{fe} Min/Max	@ f MHz
2C3767HV		4	80	40/60	0.5	0.25/2.5	—	0.5	1/8	10
	2C3741HV	4	80	30/120	0.25	0.4/1	—	1	25/250	0.001
2C5339HV	2C6193HV	5	100	60/240	2	—	0.1/0.2	2	3/15	10
2C3716HV	2C3792HV	10	80	30/120	3	—	1.3*	5	30/300	0.001
2C6059HV	2C6052HV	12	100	75/18k	6	2/10	—	5	1000/—	0.001

*t_f = 1.2 µs for 2C3716; 1.0 µs for 2C3792

Small-Signal — Listed in order of decreasing Breakdown Voltage, $V_{(BR)CEO}$

Device Type	$V_{(BR)CEO}$ Volts Min	I_C mA Max	h_{FE} Min/Max	@ I_C mA	$V_{CE(sat)}$ Volts Max	@ I_C/I_B mA	t_{on}/t_{off} ns Max	@ I_C mA	h_{fe} Min/Max	@ f MHz
NPN										
2C3439HV	350	1000	40/60	20	0.5	50/4	1/10**	20	3/15	5
2C3501HV	150	300	100/300	150	0.4	150/15	115/1150	15	1.5/8	100
2C3019HV	80	1000	100/300	150	0.2	150/15	30/30	—	5/20	20
2C2484HV	60	50	200/500	0.01	0.3	1/0.1	—	—	2/7	30
2C2222AHV	50	800	100/300	150	1	500/50	35/300	150	2.5/—	100
2C2369AHV	40	200	40/120	10	0.2	10/1	16–Dec	10	5/10	100
2C918HV	15	50	20/200	3	0.4	10/1	—	—	6/18	100
PNP										
2C3251AHV	60	200	100/300	10	0.25	10/1	35/50*	10	3/9	0.1
2C2907AHV	60	50	100/300	150	0.4	150/15	45/300	—	2/—	100
2C2605HV	60	30	100/300	0.01	0.3	10/0.5	—	—	1/8	30
2C3468HV	50	1000	25/75	500	0.35	150/15	30/30*	500	150/500***	100

* = t_r/t_f ** = µs *** = f_T

RF, Power

Device Type	$V_{(BR)CEO}$ Volts Min	I_C mA Max	P_{out} W Min/Max	@ P_{in} W	& f MHz	h_{FE} Min/Max	@ I_C mA	h_{fe} Min/Max	@ f MHz
NPN									
2C3553HV	40	1000	2.5/5.0	0.25	175	15/150	150	3.5/—	100
2C3866AHV	30	400	1.0/2.0	0.15	400	25/200	50	4/7.5	200

RF, Small Signal

Device Type	$V_{(BR)CEO}$ Volts Min	I_C mA Max	G_{pe} dB Min/Max	@ f MHz	Noise Figure dB Max	@ f MHz	h_{FE} Min/Max	@ I_C mA	h_{fe} Min/Max	@ f MHz
NPN										
2C5109HV	20	400	11/—	200	3.5	200	40/150	50	5/10	200
2C2857HV	15	40	12.5/21	450	4.5	450	30/150	3	19–Oct	100

ZENER DIODES

Device Type		V_Z
Registered	Internal	Vdc ±5%
1C4370AHV	MZC2.4A5HV	2.4
	MZC2.5A5HV	2.5
1C4371AHV	MZC2.7A5HV	2.7
	MZC2.8A5HV	2.8
1C4372AHV	MZC3.0A5HV	3
1C746AHV	MZC3.3A5HV	3.3
1C747AHV	MZC36A5HV	3.6
1C748AHV	MZC3.9A5HV	3.9
1C749AHV	MZC4.3A5HV	4.3
1C750AHV	MZC4.7A5HV	4.7
1C751AHV	MZC5.1A5HCV	5.1
1C752AHV	MZC5.6A5HV	5.6
	MZC6.0A5HV	6
1C753AHV	MZC6.2A5HV	6.2
1C754AHV	MZC6.8A5HV	6.8
1C755AHV	MZC7.5A5HV	7.5
1C756AHV	MZC8.2A5HV	8.2
	MZC8.7AHV	8.7
1C757AHV	MZC9.1A5HV	9.1
1C758AHV	MZC10A5HV	10
1C962BHV	MZC11A5HV	11
1C759AHV	MZC12A5HV	12
1C964BHV	MZC13A5HV	13
	MZC14A5HV	14
1C965BHV	MZC15A5HV	15
1C966BHV	MZC16A5HV	16
	MZC17A5HV	17
1C967BHV	MZC18A5HV	18
	MZC19A5HV	19
1C968BHV	MZC20A5HV	20

Device Type		V_Z
Registered	Internal	Vdc ±5%
1C969BHV	MZC22A5HV	22
1C970BHV	MZC24A5HV	24
	MZC25A5HV	25
1C971BHV	MZC27A5HV	27
	MZC28A5HV	28
1C972BHV	MZC30A5HV	30
1C973BHV	MZC33A5HV	33
1C974BHV	MZC36A5HV	36
1C975BHV	MZC39A5HV	39
1C976BHV	MZC43A5HV	43
1C977BHV	MZC47A5HV	47
1C978BHV	MZC51A5HV	51
1C979BHV	MZC56A5HV	56
	MZC60A5HV	60
1C980BHV	MZC62A5HV	62
1C981BHV	MZC68A5HV	68
1C982BHV	MZC75A5H	75
1C983BHV	MZC82A5HV	82
	MZC87A5HV	87
1C984BHV	MZC91A5HV	91
1C985BHV	MZCl00A5HV	100
1C986BHV	MZC110A5HV	110
1C987BHV	MZC120A5HV	120
1C988BHV	MZC130A5HV	130
	MZC140A5HV	140
1C989BHV	MZC150A5HB	150
1C990BHV	MZC160A5HV	160
	MZC170A5HV	170
1C991BHV	MZC180A5HV	180
	MZC190A5HV	190
1C992BHV	MZC200A5HV	200

Product Literature and Technical Training

In Brief . . .

With the pace of new semiconductor product introductions, the task of providing an effective and up-to-date perspective of available components is beyond the means of any single document. Hence, a comprehensive Motorola Literature System has been put in place to keep semiconductor users totally informed of all aspects of the Motorola product lines – from new product introductions, to applications, to major changes in directions.

The Motorola technical literature library and associated services consist of the following:

- An extensive library of Data Books, each containing a complete selection of data sheets associated with a particular product line.
- A series of User's Manuals and Design Manuals dealing with the application of highly complex products.
- A wide range of Application Notes and Article Reprints detailing the utilization of new and significant products.
- Instructor-led Training for the M68000 Family, the DSP56000/1, and the MC88100/200 RISC.
- Audio Cassette Course programs covering the M68000 Family, the DSP5600/1, and the MC88100/200 RISC.

These products and services are described on the following pages. However, because of different conditions and standards, some of these may not be available outside the USA.

Page

Technical Data Services 7.1-1
Product Literature 7.1-2
Technical Training 7.1-5

Technical Data Services

Motorola Semiconductor Master Selection Guide

For the identification and preliminary selection of components for circuit and system designs

For the design engineer, the Motorola Master Selection Guide is perhaps the most important single document for the identification and preliminary selection of components for circuit and system designs. Within its pages is a complete listing and description of Motorola semiconductor devices currently in general use, and those recommended for new designs. It serves two purposes:

1. It lists all standard products in the vast Motorola semiconductor inventory for rapid identification.
2. It divides this total product offering into a variety of major product categories, with sufficient technical information to permit an intelligent first-order evaluation as to the most suitable devices for a specific application.

Semiconductor Data Update Magazine

Innovative new developments from Motorola's Semiconductor Products Sector

This highly informative periodical is available to all semiconductor users on a free subscription basis. The magazine provides information on new semiconductor products and developments and provides a quick-scan insight into new-product offerings. Concise, informative articles discuss significant new product capabilities as well as newly introduced services and literature. In short, it represents an overview of the latest and most important events at Motorola that influence the efficient implementation and most cost-effective use of semiconductor devices.

We recently introduced an International edition of the periodical, which is now available throughout the European community. In addition to the informative news you've come to expect about Motorola's leading-edge products, this new broader coverage will enable us to highlight manufacturing, awards, special events, and trade shows from an international perspective.

For your free Update Magazine subscription in the USA, please contact the Literature Distribution Center. The subscription service may not be available outside the USA.

Specs in Seconds – Motorola Data Disk

Selection of Motorola semiconductors is now as quick as your desk-top computer.

This resource is an engineering tool which speeds device selection. It provides you at-the-desk access to computerized device selection for over 13,000 Motorola devices in 124 product categories. It also contains cross references to over 25,000 competitive devices and is available in both IBM and Macintosh formats. The Motorola Data Disk is designed to assist in the selection of Motorola semiconductor devices by providing the following capabilities:

- Performs a parametric search and displays the most important parameters in rank order
- Part number search
- Partial part number search
- The ability to limit searches to Surface Mount devices only
- The ability to limit searches to Military devices only
- Cross reference searches to similar and direct replacements
- Phone number listing for Motorola's sales offices and distributors
- Provides pricing information
- The ability to print displayed screens
- Automatic multilevel sorts
- Footnotes support
- The ability to print an Information Request Form to obtain specific technical literature or applications assistance
- Complete literature support for all devices including application notes, article reprints, engineering bulletins, and data books

In the USA, you can obtain a free copy of the latest Motorola Data Disk from your nearest Motorola Semiconductor Sales Office or Distributor or Literature Distribution Center.

Product Literature

Motorola Data and Application Literature

Complete technical data for the world's most comprehensive inventory of semiconductor components

To complement the industry's broadest line of semiconductor products, Motorola offers a complete library of Data books which detail the electrical characteristics of its products. These documents are supplemented by User's Manuals describing the capabilities of the products in circuit and system design.

Motorola attempts to fill the need for applications information concerning today's highly complex electronic components. Each year dozens of authors from colleges and universities, and from the industry, add their individual contributions to the collective literature. From these, Motorola has selected a number of texts which add substantially to the comprehension and applications of some of the more complex products. By buying these in large quantities and providing them to customers at lower than retail cost, Motorola hopes to foster a more comprehensive acquaintance with these products at greatly reduced prices.

For complete summaries and prices, in the USA order BR101/D from the Literature Distribution Center and in Europe order BR464/D from the Literature Distribution Centre.

Discrete Literature

Data Books and Handbooks

DL110/D Vol. 1 & 2, RF Device Data
DL111/D, Bipolar Power Transistor Data
DL118/D, Optoelectronics Device Data
DL126/D, Small-Signal Transistors/FETs/Diodes
DL135/SD, Power MOSFET Transistor Data
DL137/D, Thyristor Device Data
DL148/D, Discrete Military Operatons Data
DL150/D, TVS/Zener Device Data
HB213/D, Discrete Military Operations

Brochures and Selector Guides

BR121/D, Pressure Sensors
SG34/D, Thyristor
SG46/D, RF Products
SG48/D, Bipolar Power
SG56/D, TMOS Power MOSFET
SG79/D, Switchmode
SG87/D, Optoelectronics
SG114/D, EMS Modules/High Power Transistors
SG131/D, Power Semiconductors for Isolated Package Applications
SG132/D, Small-Signal Transistors, FETs and Diodes
SG137/D, ICePAK
SG140/D, Scanswitch
SG160/D, Rectifier
SG162/d, Sensors Quarterly Update
SG265/D, TMOS Power MOSFETs Quarterly Update
SG266/D, Bipolar Power Transistors Quarterly Update
SG267/D, Rectifier Quarterly Update
SG268/D, Thyristors Quarterly Update

Textbooks

TB231/D, Practical Switching Power Supply Design

IC Literature

Databooks And Handbooks

DL113/D, Memory Data
DL121/D, FAST and LS TTL Data
DL122/D, MECL Device Data
DL128/D, Linear and Interface ICs Data
DL129/D, High-Speed CMOS Logic Data
DL130/D, CMOS Application-Specific Standard ICs
DL131/D, CMOS Logic Data
DL136/D, Telecommunications Device Data
DL138/D, FACT Data
DL140/D, ECLinPS Device Data
DL141/D, BiCMOS Logic Data
DL142/D, MIlitary/ALS/FAST/LS/TTL Data
DL145/D, Military MECL Family Data
DL149/D, MDA20 CMOS Standard Cell Data
DL152/D, MDA15 CMOS Standard Cell Data
DL153/D, MDA12 CMOS Standard Cell Data
DL154/D, MDA08 CMOS Standard Cell Data
HB205/D, MECL System Design Handbook
M68000FR/AD, M68000 Family Reference

Selector Guides

SG96/D, Linear and Interface Integrated Circuits
SG99/D, MOS Apploication-Specific Digital-Analog ICs
SG103/D, MOS Memories Quarterly Update
SG138/D, Military IC and Discrete
SG146/D, DSP Quarterly Update
SG165/D, CSIC Microcontroller Quarterly Update
SG166/D, Advanced Microcontroller Quarterly Update
SG167/D, High End MPU Quarterly Update
SG366/D, TTL, ECL, CMOS and Special Logic Circuits

IC Literature Continued

Microprocessor Manuals

DSP56000UM/AD, DSP56000/56001 Digital Signal Processor

DSP56116UM/AD, DSP56116 User's Manual

DSP986002UM/AD, DSP96002 IEEE Floating-Point Dual-Port

M68000PM/AD, Programmer's Reference to M68000 AND CPU32

M68000UM/AD, MC68000/68008/68010/58HC000 8-/16-32-Bit

MC68020UM/AD, MC68020 32-Bit

MC68030UM/AD, MC68030 Enhanced 32-Bit

MC68EC020UM/AD, MC68EC020 32-Bit Embedded Controller User's Manual

MC68EC040UM/AD, 32-Bit Embedded Controller User's Manual

MC68EC030UM/AD, EC030 32-Bit Embedded Controller User's Manual

MC68040DH/AD, MC68040 Designer's Handbook, Preliminary Version

MC68040UM/AD, M68040, 32-Bit

MC68302UM/AD, MC68302 Integrated Multi-Protocol Processor

MC68330UM/AD, Integrated CPU32 Processor User's Manual

MC68331UM/AD, M68300 Family MC68331 User's Manual

MC68340UM/AD, MC68340 Integrated Processor

MC68605UM/AD, MC68605 X.25 Protocol Controller

MC68606UM/AD, MC68606 Multi-Link LAPD Protocol Controller

MC68824UM/AD, MC68824 Token Bus Contoller

MC68836UM/AD, MC68836 FDDI Fiber Distributed Data Interference User's Manual

MC68837UM/AD, MC68837 FDDI Fiber Distributed Data Interference User's Manual

MC68851UM/AD, MC68851 Paged Memory Management Unit

MC68881UM/AD, MC68881/68882 Floating-Point Coprocessor

MC88100UM/AD, MC88100 RISC Microprocessor

MC88110UM/AD, MC88110 Second Generation RISC Microprocessor User's Manual

MC88200UM/AD, MC88200 Cache/Memory Management Unit

Microcontroller Manuals

CPU16RM/AD, M68HC16CPU16 Central Processor Unit Reference Manual

CPU32RM/AD, CPU32 Central Processor Unit

GPTRM/AD, CPU32 Modular Microcontroller Family General Purpose Timer Reference Maual

HC711D3EVB/AD1, HC711D3EVB Evaluation Board User's Manual

HC711D3PGMR/AD1, HC711D3PGMR Programmer Board User's Manual

HC711E9PGMR/AD1, HC11E9PGMR Programmer Board User's Manual

M6805UM/AD3, M6805 HMOS, M146805 CMOS Family User's Manual

M68300EVS/AD1, M68300EVS Evaluation System User's Manual

M68331EVK/AD1, M68331EVK Evaluation Kit User's Manual

M68332EVK/AD1, M68332EVK Evaluation Kit User's Manual

M68705EVM/AD5, M68705EVM Evaluation Module User's Manual

M68CPU16PRG/AD1, M68HC16 Family CPU16 Central Processor Unit Programming Reference Guide

M68CPU32BUG/AD1, M68CPU32BUG Debug Monitor User's Manual

M68FCASS/AD1, Motorola Freeware PC-Compatible 8-Bit Cross Asssemblers User's Manual

M68HC05AG/AD, M68HC05 Applications Guide

M68HC05P8EVS/D1, M68HC05P8EVS Evaluation System User's Manual

M68HC05P9EVS/D1, M68HC05P9EVS Evaluation System User's Manual

M68HC11EVBU/D1, M68HC11EVB Evaluation Board User's Manual

M68HC11EVB/AD1, M68HC11EVBU Universal Evaluation Board User's Manual

M68HC11EVM/AD7, M68HC11EVM Evaluation Board User's Manual

M68HC11RM/AD, M68HC11 Reference Manual

M68HC16Z1EVB/D1, M68HC16Z1 Evaluation Module User's Manual

M68HC05EVM/AD4, M68HC05EVM Evaluation Module User's Manual

M68PCBUG11/D1, M68HC11 PCbug11 User's Manual

MC6801RM/AD2, MC6801/6803/68701 8-Bit Single-Chip

MC68040UM/AD1, MC68040 Programmable Timer

MC68332UM/AD, MC68332 System Integration Manual

MC68488UM/AD, MC68488 General Purpose Interface Adapter

MC68HC05CXRG/AD, MC68HC05CX HCMOS Programming Guide

MC68HC11A8RG/AD, MC68HC11A8 Programming Reference Guide

IC Literature Continued

Microcontroller Manuals

MC68HC11D3RG/AD, MC68HC11D3, 711D3 Programming Guide

MC68HC11E9RG/AD, MC68HC11E9 Programming Reference Guide

MC68HC11F1RG/AD, MC68HC11F1 Programming Reference Guide

MC68HC811E2RG/D, MC68HC311E2 Programming Reference Guide

QSMRM/AD, Queued Serial Module Reference Manual

TPURM/AD, M68300 Family Time Processor Reference Manual

ASIC Design Manual

BR165/D, MCA800/MCA2500ECL Macrocell Arrays

BR312/D, MCA2800RAM and MCA2800ALS Macrocell Arrays

HCA62A00DM/D, HCA62A00 Series HCMOS Macrocell Array

HDCDM/D, HDC Series CMOS Arrays

MCA3ECL/D, MCA3 Series ECL Array

MCA3ETLDM/D, MCA3 ETL Series Arrays

Textbooks

TB301/D, Basic Microprocessor and 6800

TB302/D, What Every Engineer Should Know About Microcomputers

TB303/D, Using Microprocessors and Microcomputers: The 68000 Famly

TB304/D, Pascal Programming Structures for Motorola Microprocessors

TB305/D, Programming Microprocessor Interfaces for Control and Instrumentation

TB309/D, Programming the 6809

TB312/D, Introduction to Integrated Circuit Layout

TB313/D, Efficient C

TB316/D, Single and Multi-Chip MCU Interfacing

TB316LM/D, Lab Manual to TB316

TB317/D, 6800, 68010, 68020 Primer

TB318/D, Microprocessor Systems Design: 68000 Hardware, Software and Interfacing

TB319/D, MC68000 Assembly Language and Systems Programming

TB320/D, The 68000 Family, Volume 1: Architecture, Addressing Modes and Instruction Set

TB322/D, The 68000 Family, Volume 2: Applications and the M68000 Devices

TB323/D, The 68000 Book

TB324/D, Real Time Digital Signal Processing Applications with Motorola's DSP56000 Family

Motorola Application Literature

Semiconductors in theory and practice

Application Notes, Engineering Bulletins and Article Reprints are part of a total information system to define the characteristics and applications of semiconductor devices. Motorola's library consists of more than 300 such documents dealing with the applications of all types of semiconductors from discrete power transistors to the most complex microprocessors. All are described in an Application Note Catalog available from our Literature Distribution Center.

Individual application notes, application reports, engineering bulletins and article reprints can also be ordered from our Literature Distribution Center.

For complete summaries and prices:
In the U.S.A. order BR135/D from the Literature Distribution Center.

In Europe order SG410/D from the Literature Distribution Centre. An Application Manual Series is also available which includes the following:

DL408/D	8-bit MCU Applications Manual
DL409/D	16/32-bit Applications Manual
DL410/D	Power Applications Manual
DL411/D	Communications Applications Manual
DL412/D	Industrial Control Applications Manual
DL413/D	Radio, RF and Video Applications Manual
DL414/D	FET Applications Manual

Contact the Literature Distribution Center for prices and ordering information. In addition, there may be an alternative document available in some countries, contact your local Motorola Sales Office.

Technical Training

Get in the Technology Fast Lane with Instructor-led and Audio Cassette Training

Join our "No Sweat" Training Program and let us stretch your mind through instructor-led courses and audio cassette tapes on the latest in microprocessor technology. Instructors actively maintain courses presented to assure material is accurate and timely. In addition, instructors are involved in new course development, constantly bringing you accurate information on the new advances in semiconductor technology. Instructor-led courses are available at regional Training Centers or at the Customer facility. For more information on our training services, call 1-800-521-6274 and ask for Technical Training or call direct (602)897-3665. If you are outside the USA, contact your local Motorola Sales Office or Technical Training Center listed in this section.

MC68EC/000 Microprocessor (MTT8)

This is an intermediate level course based on the MC68EC/000 16/32-bit microprocessor. Course covers programming the MC68EC/000 in assembly language and connecting peripheral devices and memory into a system.

4 days

MC68EC/020 Microprocessor (MTT20)

Course is based on the MC68EC/020 32-bit microprocessor. Detailed knowledge of the MC68EC/000 and MC68010 is required. The course discusses the correct usage of each of the unique instructions, cache usage and use and timing constraints of the signal pins of the MC68EC/020.

3 days

MC68EC/030 Microprocessor (MTT30)

Course covers the major features of the MC68EC/030 microprocessor which involves minimal time spent on the synchronous bus and burst mode while more detail is spent on the caches and the nternal memory management unit.

2 days

MC68EC/040A Microprocessor Update (MTT40)

Course presents the major features of the MC68EC/040 microprocessor. The course covers the new hardware bus structure, exception processing differences and instructions that are unique to the MC68EC/040. The bus structure has been extensively revised and is very different from previous M68K family devices. Therefore, much time is spent discussing the bus structure to provide the students with the proper understanding of its operation.

MC68EC/040B Microprocessor (MTT41)

Course presents the assembly level software of the M68EC/000 family: instruction sets, addressing modes, and exception processing. It then follows with the MC68EC/040 hardware bus structure, instruction and data caches, and memory management unit.

4 days

M68EC/000 Family Programming (MTT9)

Course presents software functionality of the M68EC/000, MC68010, MC68EC/020, MC68EC/030 and MC68EC/040 microprocessors. This is an assembly level course covering instruction sets, addressing modes, and exception processing of the M68EC/000 processor family. An overview of caches and memory management unit is also provided. Capabilities of the more advanced devices and differences that distinguish the CPU devices from one another are noted throughout the course. In addition, those hardware functions that have an affect on software are covered.

3 days

Advanced 32-bit Microprocessors (MTT21)

Course presents hardware and software features of MC68EC/020 and MC68EC/030 microprocessors. Course covers new hardware bus structure, exception processing differences and instructions that are unique to both the MC68EC/020 & 030. Also coverd is the instruction cache of the MC68EC/020 and instruction and data caches and memory management unit of the MC68EC/030. The MC68EC/030 synchronous bus operation is discussed and a brief description of the co-processor interface is given.

4 days

MC68EC/020/030 Hardware (MTT23)

Microcomputer hardware course based on the MC68EC/020 and MC68EC/030 microprocessors covering the usage and timing of all signal pins. No prior experience or knowledge of the MC68EC/000 family of microprocessors is necessary.

1 day

MC68332 Embedded Controller (MTT33)

Course covers major features of the MC68332, CPU32, system integration module (SIM), external bus interface, time processor unit (TPU), and q serial module (QSM). Emphasis is on programming the sub-systems in assembly language, some application examples are included.

3 days

MC68302 Communications Controller (MTT12)

Course covers the major features, applications, and communication protocol implementations of the MC68302 Communication Controller. Covered is the central processing unit (MC68EC/000 core), bus interface and timing, addressing modes and instruction set. The system integration block is discussed in detail which includes: chip select logic, interrupt controller, independent direct memory access controller (IDMA), and bus arbitration, general purpose timer, general purpose I/O, dynamic refresh controller, low power and disable CPU modes. Also covered in detail are the prime features of the communications processor, the serial communication channels which includes: six serial DMA channels, ISDN and NMSI bus description, three independent serial communication channels (SCCs), SCC buffer descriptors and various protocols such as UART, HDLC, DDCMP and BISYNC modes. Operation and programming of these channels will be covered along with some application examples.

3 days

MC88100/200 RISC (MTT32)

Course covers major features of the MC88100 and MC88200 RISC chip set including pins and buses, instructions and all system features.

3 days

MC88110 RISC (MTT36)

Course covers all major features of the MC88110 single chip RISC solution. System S/W and compiler features as well as multiple processor support will be covered.

3 days

DSP56000/1 Microprocessor (MTT31)

Course covers major features of DSP56000 and DSP56001 devices including pins, buses, exception processing, DSP instructions and addressing modes.

4 days

DSP56100 Microprocessor Family (MTT35)

Course prepares student for designing systems which include the DSP56100 Family devices.

3 days

DSP96002 Microprocessor (MTT34)

Course prepares student for designing systems which include the DSP960002.

4 days

MC68HC05 Microcontroller Family (MTT6)

Course is based on the MC68HC05C and MC68HC05B series. Major features of this popular 8-bit controller which includes block diagram and pin description, programmers model, addressing modes and instruction set are covered. The general purpose I/O ports, timer functions such as input capture and output compare, serial communication interface ports; such as SCI and SPI, pulse length modulation and analog to digital conversion are also covered.

3 days

MC68HC11 Microcontroller (MTT24)

Course is an advanced 8-bit microcontroller based on the MC68HC11 family members. The course will cover all aspects of the powerful MCMC68HC11 microcontroller such as; operation modes, memory map, EEPROM programming, addressing modes and instruction set. Reset and interrupt processing, clock monitor, computer operation properly (COP), general purpose I/O ports and handshaking are also covered. There will be detailed emphasis on the powerful MC68HC11 8 channel timer block with some application program examples such as pulse width modulation (PWM), frequency measurement and generation, stepper motor control and event counting. It will also cover the popular serial SCI and SPI interfaces, analog to digital converter and expansion mode of operation.

3 days

MC68HC16 Microcontroller (MTT27)

Course covers major features of the MC68HC16 microcontroller, including the CPU16, system integration module (SIM) and all on-chip peripherals. The CPU16 section covers instructions, addressing modes, and debug support. The system integration module topic covers bus interface chip select logic, system control such as reset and halt, clock module, bus arbitration, parallel ports, and interrupt control. A section will be devoted to interrupt and exception processing. The queued serial module (QSM) section describes in detail the two QSM sub-modules; the serial communication interface (SCI), a two wire asynchronous serial interface that is ideal for remote communications; and the queued serial peripheral interface (QSPI), asynchronous serial interface ideal for on-board communications. The general purpose timer topic describes timing features such as output compare, input capture, pulse accumulation in gated or event-counting mode, and pulse width modulation with 0-100% duty cycles.

3 days

MC68340 Integrated Processor (MTT37)

Course will cover major system components of the MC68340 integrated processor unit which will include the following detailed topics: central processing unit (CPU32), addressing modes and instruction set. Development support, system integration module which will include: the chip select logic, external bus interface, interrupt control and periodic interrupt timer. Also covered are the internal two independent direct memory access controllers, the two general purpose timers, as well as the two powerful serial communcation I/O channels. To reinforce the above mentioned topics, some example programs, protocols and typical system configurations and applications will be covered.

2 days

Not all courses described are scheduled in 1992. If you or your company has a special need for one of these courses, call us and we will make special arrangements, 1-800-521-6274 and ask for Technical Training or call direct (602)897-3665. If you are outside the USA, contact your local Motorola Sales Office or Technical Training Center listed in this section.

Call 1-800-521-6274
for a complete copy of our Technical Training Catalog and schedule
or call your local Technical Training Center if you are outside of the USA
and ask for BR348/D Rev 9

Technical Training Centers

Regional Training Centers

Chicago
2300 North Barrington Road, Suite 700
Hoffman Estates, IL 60195
(708) 490-9500

Detroit
41700 Six Mile Road
Northville, MI 48167
(313) 347-6800

Phoenix
2100 E. Elliot Road - EL524
Tempe, AZ 85284
(602) 897-4172
(800) 521-6274

San Jose
1150 Kifer Road
Kifer Technical Center, Building 2
Sunnyvale, CA 94086
(408) 749-0510

Toronto
4000 Victoria Park Avenue
North York, Ontario M2H 3P4
(416) 497-8181

Washington, D.C.
8945 Gulford Road, Suite 145
Columbia, MD 21046-1409
(301) 577-2600

Worldwide Training Centers

Munich, Germany
Phone: (89) 92103-571

Solna, Sweden
Phone: (8) 7348800

Aylesbury, United Kingdom
Phone: (0296) 393312

Kwai Chung, N.Y. Hong Kong
Phone: 0-223111

Vanves Cedex, France
Phone: (1) 40955900

Assago Milano, Italy
Phone: (39) 282201

Madrid, Spain
Phone: 457 82 04

Ramat, Israel
Phone: 972-3-7538222

Audio Cassette Courses

MC68000 Microprocessor/MTTA1/CC

COURSE DESCRIPTION:

This course is an introduction to the MC68000. It covers the major features of the MC68000: pins and bus operation, programming model, addressing modes, instruction set and exception processing (including interrupts). Software and hardware examples are included.

WHO SHOULD TAKE THIS COURSE:

The student should be familiar with memory concepts, binary numbers, hexadecimal number notation, binary arithmetic and standard logic operations. Experience with an 8-bit microprocessor, a 16-bit minicomputer, or a mainframe would be beneficial. After completion of this course, the student will have a working, technical knowledge of the MC68000.

COURSE CONTENT:

The course is composed of three audio cassette tapes containing approximately four and one-half hours of material. Course notes for the tapes and an MC68000 User's Manual are supplied to aid the student. A set of application notes and other helpful technical materials are also included. Each topic begins with clearly set objectives and continues with a comprehensive study of the subject, including self-evaluation exercises (answers are provided).

MC68020 Microprocessor/MTTA2/CC

COURSE DESCRIPTION:

This course is an introduction to the MC68020. It covers the major features of the MC68020: internal architecture, programming model, pins and bus operations, addressing modes, instruction set and exception processing.

WHO SHOULD TAKE THIS COURSE:

The student should be familiar with MC68020. After completion of this course, the student will have a working, technical knowledge of the MC68020.

COURSE CONTENT:

The course is composed of three audio cassette tapes containing approximately four and one-half hours of material. Course notes for the tapes and an MC68020 User's Manual are supplied to aid the student. A set of application notes and other helpful technical materials are also included. Each topic begins with clearly stated objectives, continues with a comprehensive study of the subject and concludes with a set of self-evaluation exercises (answers are provided).

MC68030 Microprocessor/MTTA3/CC

COURSE DESCRIPTION:

This course is an introduction to the MC68030. It covers the major features of the MC68030: data cache, burst mode, synchronous bus and the internal Memory Management Unit.

WHO SHOULD TAKE THIS COURSE:

This course assumes knowledge of the MC68000 and the MC68020. After completion of this course, the student will have a working, technical knowledge of the MC68030.

COURSE CONTENT:

The course is composed of three audio cassette tapes containing approximately three and one-half hours of material. Course notes for the tapes and an MC68030 User's Manual are supplied to aid the student. Each topic begins with clearly stated objectives and continues with a comprehensive study of the subject, including self-evaluation exercises (answers are provided).

DSP56000/1 Microprocessor/MTTA5/CC

COURSE DESCRIPTION:

This course contains a brief overview of general Digital Signal Processing concepts. The main course content covers specifics of the DSP56000 and DSP5601 including the following: internal architecture and programming model, pins and buses, general addressing modes, general instruction set, exception processing, on-chip I/O, plus the DSP instructions and addressing modes.

WHO SHOULD TAKE THIS COURSE:

The student should be familiar with memory concepts, binary numbers, hexadecimal number notation, binary arithmetic, standard logic operations and analog signal processing. After completion of this course, the student will have a working, technical knowledge of the DSP56000/1.

COURSE CONTENT:

The course is composed of three audio cassette tapes containing approximately four and one-half hours of material. Each topic has stated objectives and self-evaluation exercises with answers.

MC88100/MC88200/MTTA6/CC

COURSE DESCRIPTION:

This course is an introduction to the MC88100/MC88020. This course covers: pins and registers, exception processing (including interrupts), addressing modes, instruction set, cache and Memory Management Unit.

WHO SHOULD TAKE THIS COURSE:

Experience with a 16/32-bit microprocessor or mainframe is required. After completing the course, the student will have a working, technical knowledge of the MC88100/MC88200.

COURSE CONTENT:

The course is composed of three audio cassette tapes containing approximately four and one-half hours of material. Course notes for the tapes are supplied to aid the student. Each topic begins with clearly stated objectives and continues with a comprehensive study of the subject including self-evaluation exercises (answers are provided).

COMING July 1, 1992:
3 New Audio Cassette Courses:
MC68HC11, MC68302 and MC68040
Additional information will be forthcoming.

Cassettes available through Literature Distribution Center – Call (602) 994-6561 or 1-800-441-2447

Device Index and Subject Index

In Brief . . .

DEVICE INDEX

The following index lists all of the device numbers of the products contained in this selector guide and references the page number where each device is described in greater detail. The listing is in a numeric sequence organized in a "computer sort." This means that all the devices listed herein follow a 39 character alphabet. This "new" alphabet starts with a Period, a Dash and a Slash (. – /), followed by the 26 letter alphabet (A thru Z), which is then followed by 10 numbers (0 thru 9).

The ranking or hierarchy of this 39 character alphabet is as follows: . – / A B C D E F G H I J K L M N O P Q R S T U V W X Y Z 0 1 2 3 4 5 6 7 8 9

Therefore, if you are looking for a device starting with a letter of the alphabet like an MC1741CP, it would appear before a device starting with a number, such as 2N1132.

To find a device in this index, start with the first character of the device and find that section of the index; next move to the second character in the device number, and move to that character within the same portion of the listing; and so on until the device number is found. In other words, it is used just like a dictionary, character by character.

For example, to find the 2N6837, go to that section of the listing that begins with the number "2" (Notice that the section follows all devices that begin with a letter of the alphabet or "1"). Next, find that portion of the listing that begins with "2N" (Notice it follows those devices that begin with "2K"). Next, find that portion of the listing that begins with "2N6" (Notice it follows those devices that begin with "2N5"). Continue looking for those portions that begin with the next consecutive character until you have found the entire number.

Because of the way "Computer Sort" works it is not necessary to be concerned with the absolute value or number of characters in a part number, just move across the device part number, left to right, one character at a time until you find the number.

SUBJECT INDEX

This listing is intended to simplify the identification of products where specific device numbers are not known.

Page

Device Index 8.1-1

Subject Index 8.2-1

DEVICE	PAGE
ACR900-30E	5.8-33
AMR900-60	5.8-33
AMR900-60A	5.8-33
AMR960-100	5.8-33
AM26LS30	4.6-6
AM26LS31	4.6-5
	4.6-6
AM26LS32	4.6-5
	4.6-6
AM26L532	4.6-6
ATV5030	5.8-34
ATV5090B	5.8-34
ATV6031	5.8-34
ATV7050	5.8-34
BDV64B	5.3-21
BDV65B	5.3-21
BD135	5.3-23
BD136	5.3-23
BD137	5.3-23
BD138	5.3-23
BD139	5.3-23
BD140	5.3-23
BD140.10	5.3-23
BD157	5.3-23
BD158	5.3-23
BD159	5.3-23
BD165	5.3-23
BD166	5.3-23
BD169	5.3-23
BD170	5.3-23
BD179	5.3-23
BD180	5.3-23
BD235	5.3-23
BD236	5.3-23
BD237	5.3-23
BD249A	5.3-21
BD249B	5.3-21
BD249C	5.3-21
BD250C	5.3-21
BD437	5.3-24
BD438	5.3-24
BD440	5.3-24
BD441	5.3-24
BD442	5.3-24
BD677	5.3-24
BD677A	5.3-24
BD678	5.3-24
BD678A	5.3-24
BD679	5.3-24
BD679A	5.3-24
BD680	5.3-24
BD680A	5.3-24
BD681	5.3-24
BD682	5.3-24
BD776	5.3-24
BD777	5.3-24
BD778	5.3-24
BD779	5.3-24
BD780	5.3-24
BD787	5.3-24
BD788	5.3-24
BD789	5.3-24
BD790	5.3-24
BD791	5.3-24
BD792	5.3-24
BFRC90	5.8-45
BFRC91	5.8-45
BFRC96	5.8-45
BFR90	5.8-21
	5.8-27
	5.8-45
BFR91	5.8-21
	5.8-27
BFR91	5.8-45
BFR92	5.8-21
BFR93	5.8-21
BFR96	5.8-21
	5.8-26
BFR96	5.8-45
BFS17	5.8-21
BFW92A	5.8-21
	5.8-26
BFY90	5.8-24
	5.8-26
BRX44	5.5-2
BRX45	5.5-2
BRX46	5.5-2
BRX47	5.5-2
BRX49	5.5-2
BRY55-100	5.5-2
BRY55-200	5.5-2
BRY55-30	5.5-2
BRY55-400	5.5-2
BRY55-500	5.5-2
BRY55-600	5.5-2
BRY55-609	5.5-2
BT500	5.8-18
BT500F	5.8-18
BUS50	5.3-31
BUS51	5.3-31
BUS52	5.3-31
BUS98	5.3-30
BUS98A	5.3-30
BUT13	5.3-30
BUT33	5.3-31
BUT34	5.3-31
BUT50P	5.3-21
BUT51P	5.3-21
BUV10	5.3-30
BUV11	5.3-29
BUV18A	5.3-31
BUV20	5.3-31
BUV21	5.3-31
BUV22	5.3-31
BUV23	5.3-30
BUV48	5.3-21
BUV48A	5.3-21
BUV60	5.3-31
BUX11	5.3-29
BUX39	5.3-30
BUX40	5.3-29
BUX41	5.3-28
BUX41N	5.3-29
BUX48	5.3-29
BUX48A	5.3-29
BUX98	5.3-30
BUX98A	5.3-30
BUY49P	5.3-23
BU1508ADF	5.3-36
BU1508AF	5.3-36
BU208A	5.3-27
BU323A	5.3-28
BU323AP	5.3-21
BZV55C10	5.2-7
BZV55C11	5.2-7
BZV55C12	5.2-7
BZV55C13	5.2-7
BZV55C15	5.2-7
BZV55C16	5.2-7
BZV55C18	5.2-7
BZV55C2V4	5.2-7
BZV55C2V7	5.2-7
BZV55C20	5.2-7
BZV55C22	5.2-7
BZV55C24	5.2-7
BZV55C27	5.2-7
BZV55C3V0	5.2-7
BZV55C3V3	5.2-7
BZV55C3V6	5.2-7
BZV55C3V9	5.2-7
BZV55C30	5.2-7
BZV55C33	5.2-7
BZV55C36	5.2-7
BZV55C39	5.2-7
BZV55C4V3	5.2-7
BZV55C4V7	5.2-7
BZV55C43	5.2-7
BZV55C47	5.2-8
BZV55C5V1	5.2-7
BZV55C5V6	5.2-7
BZV55C51	5.2-8
BZV55C56	5.2-8
BZV55C6V2	5.2-7
BZV55C6V8	5.2-7
BZV55C7V5	5.2-7
BZV55C8V2	5.2-7
BZV55C9V1	5.2-7
BZX55C10	5.2-2
BZX55C11	5.2-2
BZX55C12	5.2-2
BZX55C13	5.2-2
BZX55C15	5.2-2
BZX55C16	5.2-2
BZX55C18	5.2-2
BZX55C2V4	5.2-2
BZX55C2V7	5.2-2
BZX55C20	5.2-2
BZX55C22	5.2-2
BZX55C24	5.2-2
BZX55C27	5.2-2
BZX55C3V0	5.2-2
BZX55C3V3	5.2-2
BZX55C3V6	5.2-2
BZX55C3V9	5.2-2
BZX55C30	5.2-2
BZX55C33	5.2-2
BZX55C36	5.2-2
BZX55C39	5.2-2
BZX55C4V3	5.2-2
BZX55C4V7	5.2-2
BZX55C43	5.2-2
BZX55C47	5.2-2
BZX55C5V1	5.2-2
BZX55C5V6	5.2-2
BZX55C51	5.2-2
BZX55C56	5.2-2
BZX55C6V2	5.2-2
BZX55C6V8	5.2-2
BZX55C62	5.2-2
BZX55C68	5.2-2
BZX55C7V5	5.2-2
BZX55C75	5.2-3
BZX55C8V2	5.2-2
BZX55C82	5.2-3
BZX55C9V1	5.2-2
BZX55C91	5.2-3
BZX79C10	5.2-2
BZX79C100	5.2-3
BZX79C11	5.2-2
BZX79C110	5.2-3
BZX79C12	5.2-2
BZX79C120	5.2-3
BZX79C13	5.2-2
BZX79C130	5.2-3
BZX79C15	5.2-2
BZX79C150	5.2-3
BZX79C16	5.2-2
BZX79C160	5.2-3
BZX79C18	5.2-2
BZX79C180	5.2-3
BZX79C2V4	5.2-2
BZX79C2V7	5.2-2
BZX79C20	5.2-2
BZX79C200	5.2-3
BZX79C22	5.2-2
BZX79C24	5.2-2
BZX79C27	5.2-2
BZX79C3V0	5.2-2
BZX79C3V3	5.2-2
BZX79C3V6	5.2-2
BZX79C3V9	5.2-2
BZX79C30	5.2-2
BZX79C33	5.2-2
BZX79C36	5.2-2
BZX79C39	5.2-2
BZX79C4V3	5.2-2
BZX79C4V7	5.2-2
BZX79C43	5.2-2
BZX79C47	5.2-2
BZX79C5V1	5.2-2
BZX79C5V6	5.2-2
BZX79C51	5.2-2
BZX79C56	5.2-2
BZX79C6V2	5.2-2
BZX79C6V8	5.2-2
BZX79C62	5.2-2
BZX79C68	5.2-2
BZX79C7V5	5.2-2
BZX79C75	5.2-3
BZX79C8V2	5.2-2
BZX79C82	5.2-3
BZX79C9V1	5.2-2
BZX79C91	5.2-3
BZX83C10	5.2-2
BZX83C11	5.2-2
BZX83C12	5.2-2

DEVICE	PAGE
BZX83C13	5.2-2
BZX83C15	5.2-2
BZX83C16	5.2-2
BZX83C18	5.2-2
BZX83C2V7	5.2-2
BZX83C20	5.2-2
BZX83C22	5.2-2
BZX83C24	5.2-2
BZX83C27	5.2-2
BZX83C3V0	5.2-2
BZX83C3V3	5.2-2
BZX83C3V6	5.2-2
BZX83C3V9	5.2-2
BZX83C30	5.2-2
BZX83C33	5.2-2
BZX83C4V3	5.2-2
BZX83C4V7	5.2-2
BZX83C5V1	5.2-2
BZX83C5V6	5.2-2
BZX83C6V2	5.2-2
BZX83C6V8	5.2-2
BZX83C7V5	5.2-2
BZX83C8V2	5.2-2
BZX83C9V1	5.2-2
BZX84C10L	5.2-7
BZX84C11L	5.2-7
BZX84C12L	5.2-7
BZX84C13L	5.2-7
BZX84C15L	5.2-7
BZX84C16L	5.2-7
BZX84C18L	5.2-7
BZX84C2V4L	5.2-7
BZX84C2V7L	5.2-7
BZX84C20L	5.2-7
BZX84C22L	5.2-7
BZX84C24L	5.2-7
BZX84C27L	5.2-7
BZX84C3V0L	5.2-7
BZX84C3V3L	5.2-7
BZX84C3V6L	5.2-7
BZX84C3V9L	5.2-7
BZX84C30L	5.2-7
BZX84C33L	5.2-7
BZX84C36L	5.2-7
BZX84C39L	5.2-7
BZX84C4V3L	5.2-7
BZX84C4V7L	5.2-7
BZX84C43L	5.2-7
BZX84C47L	5.2-8
BZX84C5V1L	5.2-7
BZX84C5V6L	5.2-7
BZX84C51L	5.2-8
BZX84C56L	5.2-8
BZX84C6V2L	5.2-7
BZX84C6V8L	5.2-7
BZX84C62L	5.2-8
BZX84C68L	5.2-8
BZX84C7V5L	5.2-7
BZX84C75L	5.2-8
BZX84C8V2L	5.2-7
BZX84C9V1L	5.2-7
BZX85C10	5.2-4
BZX85C100	5.2-5
BZX85C11	5.2-4
BZX85C12	5.2-4
BZX85C13	5.2-4
BZX85C15	5.2-4
BZX85C16	5.2-4
BZX85C18	5.2-4
BZX85C20	5.2-4
BZX85C22	5.2-4
BZX85C24	5.2-4
BZX85C27	5.2-4
BZX85C3V3	5.2-4
BZX85C3V6	5.2-4
BZX85C3V9	5.2-4
BZX85C30	5.2-4
BZX85C33	5.2-4
BZX85C36	5.2-4
BZX85C39	5.2-4
BZX85C4V3	5.2-4
BZX85C4V7	5.2-4
BZX85C43	5.2-4
BZX85C47	5.2-4
BZX85C5V1	5.2-4
BZX85C5V6	5.2-4
BZX85C51	5.2-4
BZX85C56	5.2-4
BZX85C6V2	5.2-4
BZX85C6V8	5.2-4
BZX85C62	5.2-4
BZX85C68	5.2-4
BZX85C7V5	5.2-4
BZX85C75	5.2-5
BZX85C8V2	5.2-4
BZX85C82	5.2-5
BZX85C9V1	5.2-4
BZX85C91	5.2-5
CA2810C	5.8-40
CA2813C	5.8-40
CA2818C	5.8-40
CA2830C	5.8-40
CA2832C	5.8-40
CA2833C	5.8-40
CA2842C	5.8-40
CA2850CR	5.8-40
CA2870C	5.8-40
CA2875CR	5.8-40
CA3054	4.8-3
CA3146	4.8-3
CA3146D	4.11-2
CA4800C	5.8-40
CA4812C	5.8-40
CA4815C	5.8-40
CA4900	5.8-40
CA4912	5.8-40
CA4915	5.8-40
CA5800C	5.8-40
CA5815C	5.8-40
CA5900	5.8-40
CA5915	5.8-40
CA7901	5.8-36
CA901	5.8-37
CA902	5.8-37
CA912	5.8-37
CNX35	5.6-3
CNX35S,F	5.6-7
CNX36	5.6-3
CNX36S,F	5.6-7
CNX82	5.6-3
CNX82S,F	5.6-7
CNX83	5.6-3
CNX83S,F	5.6-7
CNY17-1	5.6-3
CNY17-1S,F	5.6-7
CNY17-2	5.6-3
CNY17-2S,F	5.6-7
CNY17-3	5.6-3
CNY17-3S,F	5.6-7
CR2424	5.8-42
CR2424R	5.8-42
CR2425	5.8-42
CR2425R	5.8-42
CR3424	5.8-42
CR3424R	5.8-42
CR3425	5.8-42
CR3425R	5.8-42
CR820	5.8-27
C106A	5.5-3
C106B	5.5-3
C106D	5.5-3
C106F	5.5-3
C106M	5.5-3
C122A1	5.5-4
C122B1	5.5-4
C122D1	5.5-4
C122F1	5.5-4
C122M1	5.5-4
C122N1	5.5-4
C228A3	5.5-9
C228B3	5.5-9
C228D3	5.5-9
C228M3	5.5-9
DAC-08CD, ED	4.11-2
DHP02-36-40	5.8-41
DHP05-18-20	5.8-41
DHP05-36-10	5.8-41
DHP10-14-15	5.8-41
DHP10-32-08	5.8-41
DSP56ADC16	2.1-5
DSP56KCCA	2.1-7
DSP56KCCAJ	2.1-7
DSP56KCCC	2.1-7
DSP56KCCCJ	2.1-7
DSP56KCCF	2.1-7
DSP56KCCFJ	2.1-7
DSP56KCCG	2.1-7
DSP56KCCGJ	2.1-7
DSP56000	2.1-3
DSP56000ADS	2.1-6
DSP56000ADSA	2.1-6
DSP56000ADSB	2.1-6
DSP56000ADSC	2.1-6
DSP56000ADSF	2.1-6
DSP56000ADSG	2.1-6
DSP56000CLASA	2.1-7
DSP56000CLASB	2.1-7
DSP56000CLASC	2.1-7
DSP56000CLASF	2.1-7
DSP56000CLASG	2.1-7, 2.4-2
DSP56000FE20	2.1-3
DSP56000RC20	2.1-3
DSP56001	2.1-3
DSP56001FC20	2.1-3
DSP56001FC27	2.1-3
DSP56001FC33	2.1-3
DSP56001FD20	2.1-3
DSP56001FD27	2.1-3
DSP56001FD33	2.1-3
DSP56001FE20	2.1-3
DSP56001FE27	2.1-3
DSP56001FE33	2.1-3
DSP56001RC20	2.1-3
DSP56001RC27	2.1-3
DSP56001RC33	2.1-3
DSP56100	2.1-2
DSP56100ADSA	2.1-6
DSP56100ADSB	2.1-6
DSP56100ADSC	2.1-6
DSP56100ADSF	2.1-6
DSP56100ADSG	2.1-6
DSP56116CLASA	2.1-7
DSP56116CLASB	2.1-7
DSP56116CLASC	2.1-7
DSP56116CLASF	2.1-7
DSP56116CLASG	2.1-7
DSP56156	2.1-2
DSP56156ADS	2.1-6
DSP56156ADSA	2.1-6
DSP56156ADSB	2.1-6
DSP56156ADSC	2.1-6
DSP56156ADSF	2.1-6
DSP56200	2.1-5
DSP96000	2.1-4
DSP96000ADSA	2.1-6
DSP96000ADSB	2.1-6
DSP96000ADSC	2.1-6
DSP96000ADSF	2.1-6
DSP96000CLASA	2.1-7
DSP96000CLASB	2.1-7
DSP96000CLASC	2.1-7
DSP96000CLASF	2.1-7
DSP96000CLASG	2.1-7
DSP96002	2.1-4
HDC003	1.1-3
HDC006	1.1-3
HDC008	1.1-3
HDC011	1.1-3
HDC016	1.1-3
HDC027	1.1-3
HDC031	1.1-3
HDC049	1.1-3
HDC064	1.1-3
HDC105	1.1-3
H11AA1	5.6-4
H11AA1S,F	5.6-8
H11AA2	5.6-4
H11AA2S,F	5.6-8
H11AA3	5.6-4
H11AA3S,F	5.6-8
H11AA4	5.6-4
H11AA4S,F	5.6-8

DEVICE	PAGE
H11AV1	5.6-3
H11AV1S,F	5.6-7
H11AV2	5.6-3
H11AV2S,F	5.6-7
H11AV3	5.6-3
H11AV3S,F	5.6-7
H11A1	5.6-3
H11A1S,F	5.6-7
H11A2	5.6-3
H11A2S,F	5.6-7
H11A3	5.6-3
H11A3S,F	5.6-7
H11A4	5.6-3
H11A4S,F	5.6-7
H11A5	5.6-3
H11A5S,F	5.6-7
H11A5100	5.6-3
H11A5100S,F	5.6-7
H11A520	5.6-3
H11A520S,F	5.6-7
H11A550	5.6-3
H11A550S,F	5.6-7
H11B1	5.6-4
H11B1S,F	5.6-8
H11B2	5.6-4
H11B2S,F	5.6-8
H11B255	5.6-4
H11B255S,F	5.6-8
H11D1	5.6-4
H11D1S,F	5.6-9
H11D2	5.6-4
H11D2S,F	5.6-9
H11D3	5.6-4
H11D3S,F	5.6-9
H11D4	5.6-4
H11D4S,F	5.6-9
H11G1	5.6-4
H11G1S,F	5.6-8
H11G2	5.6-4
H11G2S,F	5.6-8
H11G3	5.6-4
H11G3S,F	5.6-8
H11L1	5.6-5
H11L1S,F	5.6-9
H11L2	5.6-5
H11L2S,F	5.6-9
H21A1	5.6-11
H21A2	5.6-11
H21A3	5.6-11
H21B1	5.6-11
H22A1	5.6-11
H22A2	5.6-11
H22A3	5.6-11
H22B1	5.6-11
H4C027	1.1-3
H4C035	1.1-3
H4C057	1.1-3
H4C086	1.1-3
H4C123	1.1-3
H4C161	1.1-3
H4C195	1.1-3
H4C318	1.1-3
ICTE-10	5.2-15
ICTE-10C	5.2-15
ICTE-12	5.2-15
ICTE-12C	5.2-15
ICTE-15	5.2-15
ICTE-15C	5.2-15
ICTE-18	5.2-15
ICTE-18C	5.2-15
ICTE-22	5.2-15
ICTE-22C	5.2-15
ICTE-36	5.2-15
ICTE-36C	5.2-15
ICTE-45	5.2-15
ICTE-45C	5.2-15
ICTE-5	5.2-15
ICTE-8	5.2-15
ICTE-8C	5.2-15
JO2015A	5.8-9
LD356	4.1-3
LF347	4.1-5
LF347B	4.1-5
LF351	4.1-3
LF351D	4.11-2
LF353	4.1-4
LF353D	4.11-2
LF356B	4.1-3
LF357	4.1-3
LF357B	4.1-3
LF411CD	4.11-2
LF412CD	4.11-2
LF422C	4.1-4
LF441C	4.1-3
LF441CD	4.11-2
LF442CD	4.11-2
LF444C	4.1-5
LF444CD	4.11-2
LMAC94A2	5.5-11
LMAC94A3	5.5-11
LMAC94A4	5.5-11
LMAC94B2	5.5-11
LMAC94B3	5.5-11
LMAC94B4	5.5-11
LM101A	4.1-2
LM11C	4.1-3
LM11CL	4.1-3
LM111	4.1-9
LM124	4.1-6
LM139	4.1-9
LM139A	4.1-9
LM158	4.1-5
LM201A	4.1-2
LM201AD	4.11-2
LM211	4.1-9
LM211D	4.11-2
LM224	4.1-6
LM224D	4.11-2
LM239	4.1-9
LM239A	4.1-9
LM239D,AD	4.11-2
LM248	4.1-6
LM258	4.1-4
LM258D	4.11-2
LM285D-1.2	4.11-2
LM285D-2.5	4.11-2
LM285Z-1.2	4.4-2
LM285Z-2.5	4.4-2
LM2901	4.1-9
LM2901D	4.11-2
LM2902	4.1-6
LM2902D	4.11-2
LM2903	4.1-9
LM2903D	4.11-2
LM2904	4.1-4
LM2904D	4.11-2
LM293D	4.11-2
LM2931,C	4.9-2
LM2931AD-5.0,D-5.0	4.11-2
LM2931A-5.0	4.2-2
LM2931C	4.2-4
LM2931CD	4.11-2
LM2931-5.0	4.2-2
LM2935	4.2-2
	4.9-2
LM301A	4.1-2
LM301AD	4.11-2
LM307	4.1-3
LM308A	4.1-2
LM308AD	4.11-2
LM311	4.1-9
LM311D	4.11-2
LM317	4.2-4
LM317L	4.2-4
LM317LD	4.11-2
LM317M	4.2-4
LM317MDT	4.11-2
LM323	4.2-2
LM323A	4.2-2
LM324	4.1-5
LM324D,AD	4.11-2
LM337	4.2-4
LM337M	4.2-4
LM339	4.1-9
LM339A	4.1-9
LM339D,AD	4.11-2
LM340A-12	4.2-3
LM340A-15	4.2-3
LM340A-5	4.2-2
LM340-12	4.2-3
LM340-15	4.2-3
LM340-18	4.2-3
LM340-24	4.2-4
LM340-5	4.2-2
LM340-6	4.2-3
LM340-8	4.2-3
LM348	4.1-5
LM348D	4.11-2
LM350	4.2-4
LM358	4.1-4
LM358D	4.11-2
LM385BZ-1.2	4.4-2
LM385BZ-2.5	4.4-2
LM385D-1.2	4.11-2
LM385D-2.5	4.11-2
LM385Z-1.2	4.4-2
LM385Z-2.5	4.4-2
LM3900D	4.11-2
LM393	4.1-9
LM393A	4.1-9
LM393D	4.11-2
LM833	4.1-4
LM833D	4.11-2
LT1001A	5.8-24
	5.8-26
LT2001	5.8-22
	5.8-26
LT3014	5.8-23
LT4217A	5.8-22
	5.8-27
LT4239A	5.8-24
	5.8-27
MAC137-500	5.5-14
MAC137-600	5.5-14
MAC137-800	5.5-14
MAC137G-500	5.5-14
MAC137G-600	5.5-14
MAC137G-800	5.5-14
MAC15-10	5.5-19
MAC15-10FP	5.5-19
MAC15-4	5.5-19
MAC15-4FP	5.5-19
MAC15-6	5.5-19
MAC15-6FP	5.5-19
MAC15-8	5.5-19
MAC15-8FP	5.5-19
MAC15A10	5.5-19
MAC15A10FP	5.5-19
MAC15A4	5.5-19
MAC15A4FP	5.5-19
MAC15A6	5.5-19
MAC15A6FP	5.5-19
MAC15A8	5.5-19
MAC15A8FP	5.5-19
MAC16-10	5.5-19
MAC16-4	5.5-19
MAC16-6	5.5-19
MAC16-8	5.5-19
MAC210-10	5.5-15
MAC210-10FP	5.5-16
MAC210-4	5.5-15
MAC210-4FP	5.5-16
MAC210-6	5.5-15
MAC210-6FP	5.5-16
MAC210-8	5.5-15
MAC210-8FP	5.5-16
MAC210A10	5.5-15
MAC210A10FP	5.5-16
MAC210A4	5.5-15
MAC210A4FP	5.5-16
MAC210A6	5.5-15
MAC210A6FP	5.5-16
MAC210A8	5.5-15
MAC210A8FP	5.5-16
MAC212-10	5.5-17
MAC212-10FP	5.5-17
MAC212-4	5.5-17
MAC212-4FP	5.5-17
MAC212-6	5.5-17
MAC212-6FP	5.5-17
MAC212-8	5.5-17
MAC212-8FP	5.5-17
MAC212A10	5.5-17

DEVICE	PAGE
MAC212A10FP	5.5-17
MAC212A4	5.5-17
MAC212A4FP	5.5-17
MAC212A6	5.5-17
MAC212A6FP	5.5-17
MAC212A8	5.5-17
MAC212A8FP	5.5-17
MAC213-10	5.5-17
MAC213-4	5.5-17
MAC213-6	5.5-17
MAC213-8	5.5-17
MAC218-10	5.5-13
MAC218-10FP	5.5-14
MAC218-4	5.5-13
MAC218-4FP	5.5-14
MAC218-6	5.5-13
MAC218-6FP	5.5-14
MAC218-8	5.5-13
MAC218-8FP	5.5-14
MAC218A10	5.5-13
MAC218A10FP	5.5-14
MAC218A4	5.5-13
MAC218A4FP	5.5-14
MAC218A6	5.5-13
MAC218A6FP	5.5-14
MAC218A8	5.5-13
MAC218A8FP	5.5-14
MAC219-10	5.5-14
MAC219-4	5.5-14
MAC219-6	5.5-14
MAC219-8	5.5-14
MAC223-10	5.5-21
MAC223-10FP	5.5-21
MAC223-4	5.5-21
MAC223-4FP	5.5-21
MAC223-6	5.5-21
MAC223-6FP	5.5-21
MAC223-8	5.5-21
MAC223-8FP	5.5-21
MAC223A10	5.5-21
MAC223A10FP	5.5-21
MAC223A4	5.5-21
MAC223A4FP	5.5-21
MAC223A6	5.5-21
MAC223A6FP	5.5-21
MAC223A8	5.5-21
MAC223A8FP	5.5-21
MAC224-10	5.5-23
MAC224-4	5.5-23
MAC224-6	5.5-23
MAC224-8	5.5-23
MAC224A10	5.5-23
MAC224A4	5.5-23
MAC224A6	5.5-23
MAC224A8	5.5-23
MAC228-10	5.5-15
MAC228-10FP	5.5-15
MAC228-4	5.5-15
MAC228-4FP	5.5-15
MAC228-6	5.5-15
MAC228-6FP	5.5-15
MAC228-8	5.5-15
MAC228-8FP	5.5-15
MAC228A10	5.5-15
MAC228A10FP	5.5-15
MAC228A4	5.5-15
MAC228A4FP	5.5-15
MAC228A6	5.5-15
MAC228A6FP	5.5-15
MAC228A8	5.5-15
MAC228A8FP	5.5-15
MAC229-10	5.5-15
MAC229-10FP	5.5-15
MAC229-4	5.5-15
MAC229-4FP	5.5-15
MAC229-6	5.5-15
MAC229-6FP	5.5-15
MAC229-8	5.5-15
MAC229-8FP	5.5-15
MAC229A10	5.5-15
MAC229A10FP	5.5-15
MAC229A4	5.5-15
MAC229A4FP	5.5-15
MAC229A6	5.5-15
MAC229A6FP	5.5-15
MAC229A8	5.5-15
MAC229A8FP	5.5-15
MAC245B	5.5-16
MAC245D	5.5-16
MAC245M	5.5-16
MAC250B	5.5-18
MAC250D	5.5-18
MAC250M	5.5-18
MAC250N	5.5-18
MAC261B	5.5-20
MAC261D	5.5-20
MAC261M	5.5-20
MAC3010-15	5.5-24
MAC3010-25	5.5-24
MAC3010-4	5.5-24
MAC3010-40	5.5-24
MAC3010-40I	5.5-24
MAC3010-8	5.5-24
MAC3020-15	5.5-24
MAC3020-25	5.5-24
MAC3020-4	5.5-24
MAC3020-40	5.5-24
MAC3020-40I	5.5-24
MAC3020-8	5.5-24
MAC3030-15	5.5-24
MAC3030-25	5.5-24
MAC3030-4	5.5-24
MAC3030-40	5.5-24
MAC3030-40I	5.5-24
MAC3030-8	5.5-24
MAC3040-15	5.5-24
MAC3040-25	5.5-24
MAC3040-4	5.5-24
MAC3040-40	5.5-24
MAC3040-40I	5.5-24
MAC3040-8	5.5-24
MAC3060-15	5.5-24
MAC3060-25	5.5-24
MAC3060-4	5.5-24
MAC3060-8	5.5-24
MAC310-10	5.5-17
MAC310-4	5.5-17
MAC310-6	5.5-17
MAC310-8	5.5-17
MAC310A10	5.5-17
MAC310A4	5.5-17
MAC310A6	5.5-17
MAC310A8	5.5-17
MAC320-10	5.5-20
MAC320-10FP	5.5-19
MAC320-4	5.5-20
MAC320-4FP	5.5-19
MAC320-6	5.5-20
MAC320-6FP	5.5-19
MAC320-8	5.5-20
MAC320-8FP	5.5-19
MAC320A10	5.5-20
MAC320A10FP	5.5-19
MAC320A4	5.5-20
MAC320A4FP	5.5-19
MAC320A6	5.5-20
MAC320A6FP	5.5-19
MAC320A8	5.5-20
MAC320A8FP	5.5-19
MAC321-10	5.5-20
MAC321-4	5.5-20
MAC321-6	5.5-20
MAC321-8	5.5-20
MAC4111M	5.5-16
MAC4120B	5.5-19
MAC4120D	5.5-19
MAC4120M	5.5-19
MAC4120N	5.5-19
MAC4121B	5.5-16
MAC4121D	5.5-16
MAC4121M	5.5-16
MAC4121N	5.5-16
MAC5441	5.5-22
MAC5442	5.5-22
MAC5443	5.5-22
MAC5569	5.5-16
MAC5570	5.5-16
MAC625-4	5.5-21
MAC625-6	5.5-21
MAC625-8	5.5-21
MAC635-4	5.5-22
MAC635-6	5.5-22
MAC635-8	5.5-22
MAC6400B	5.5-23
MAC6400D	5.5-23
MAC6400M	5.5-23
MAC6400N	5.5-23
MAC6401B	5.5-22
MAC6401D	5.5-22
MAC6401M	5.5-22
MAC6401N	5.5-22
MAC97-4	5.5-11
MAC97-6	5.5-11
MAC97-8	5.5-11
MAC97A4	5.5-11
MAC97A6	5.5-11
MAC97A8	5.5-11
MAC97B4	5.5-11
MAC97B6	5.5-11
MAC97B8	5.5-11
MBRD320	5.4-3
MBRD330	5.4-3
MBRD340	5.4-3
MBRD350	5.4-3
MBRD360	5.4-3
MBRD620CT	5.4-3
MBRD630CT	5.4-3
MBRD640CT	5.4-3
MBRD650CT	5.4-3
MBRD660CT	5.4-3
MBRF2535CT	5.4-5
MBRF2545CT	5.4-5
MBRM20100CTHX	6.3-16
MBRM20100CTHXV	6.3-16
MBRM20200CTHX	6.3-16
MBRM20200CTHXV	6.3-16
MBRM2045CTHX	6.3-16
MBRM2045CTHXV	6.3-16
MBRM2060CTHX	6.3-16
MBRM2060CTHXV	6.3-16
MBRM3045CTHXV	6.3-16
MBRS1100T3	5.4-3
MBRS120T3	5.4-3
MBRS130T3	5.4-3
MBRS140T3	5.4-3
MBRS170T3	5.4-3
MBRS180T3	5.4-3
MBRS190T3	5.4-3
MBRS320T3	5.4-3
MBRS330T3	5.4-3
MBRS340T3	5.4-3
MBR10100	5.4-4
MBR1035	5.4-4
MBR1045	5.4-4
MBR1060	5.4-4
MBR1070	5.4-4
MBR1080	5.4-4
MBR1090	5.4-4
MBR1100	5.4-3
MBR12035CT	5.4-7
MBR12045CT	5.4-7
MBR12050CT	5.4-7
MBR12060CT	5.4-7
MBR150	5.4-3
MBR1535CT	5.4-4
MBR1545CT	5.4-4
MBR160	5.4-3
MBR1635	5.4-4
MBR1645	5.4-4
MBR170	5.4-3
MBR180	5.4-3
MBR190	5.4-3
MBR20015CTL	5.4-7
MBR20020CTL	5.4-7
MBR20025CTL	5.4-7
MBR20030CTL	5.4-7
MBR20100CT	5.4-4
MBR2015CTL	5.4-4
MBR20200CT	5.4-2, 4
MBR2030CTL	5.4-2, 4
MBR2035CT	5.4-4
MBR2045CT	5.4-4

DEVICE	PAGE
MBR2060CT	5.4-4
MBR2070CT	5.4-4
MBR2080CT	5.4-4
MBR2090CT	5.4-4
MBR2535CLT	5.4-2, 4
MBR2535CT	5.4-5
MBR2545CT	5.4-5
MBR30035CT	5.4-7
MBR30045CT	5.4-7
MBR30050CT	5.4-7
MBR30060CT	5.4-7
MBR3020CT	5.4-5
MBR3035CT	5.4-5
MBR3035PT	5.4-5
MBR3035WT	5.4-5
MBR3045	5.4-5
MBR3045CTSD241	5.4-5
MBR3045PT	5.4-5
MBR3045WT	5.4-5
MBR3100	5.4-3
MBR320	5.4-3
MBR330	5.4-3
MBR340	5.4-3
MBR350	5.4-3
MBR3520	5.4-5
MBR3535	5.4-5
MBR3545SD41	5.4-5
MBR360	5.4-3
MBR370	5.4-3
MBR380	5.4-3
MBR390	5.4-3
MBR5025L	5.4-6
MBR5825HX	6.3-16
MBR5825HXV	6.3-16
MBR6015L	5.4-6
MBR6020L	5.4-6
MBR6025L	5.4-6
MBR6030L	5.4-6
MBR6035	5.4-6
MBR6045SD51	5.4-6
MBR6391HX	6.3-16
MBR6391HXV	6.3-16
MBR6392HX	6.3-16
MBR6392HXV	6.3-16
MBR6535	5.4-6
MBR6545	5.4-6
MBR735	5.4-4
MBR745	5.4-4
MBR7535	5.4-6
MBR7545	5.4-6
MBR8035	5.4-6
MBR8045	5.4-6
MBS4991	5.5-25
MBS4992	5.5-25
MBS4993	5.5-25
MCA10000ECL	1.1-2
MCA1500M	1.1-2
MCA2200ECL	1.1-2
MCA230	5.6-4
MCA230S,F	5.6-8
MCA231	5.6-4
MCA231S,F	5.6-8
MCA2500ECL	1.1-2
MCA255	5.6-4
MCA255S,F	5.6-8
MCA3200ETL	1.1-2
MCA6200ETL	1.1-2
MCA750ETL	1.1-2
MCA800ECL	1.1-2
MCCS142233	2.5-4
	3.1-19
	3.1-52
MCCS146818B	2.5-3
MCCS146818BM	2.5-3
MCCS146818B1M	2.5-3
MCCS156818B	2.5-3
MCCS156818BM	2.5-3
MCCS156818B1M	2.5-3
MCCS16C451	2.5-4
MCCS16C452	2.5-4
MCCS16C462	2.5-4
MCCS1850	2.5-3
MCCS53C90	2.5-4
MCM101510	2.7-2
MCM101514	2.7-2
MCM2018AN	2.7-2
MCM32130	2.7-5
MCM32230	2.7-5
MCM32256	2.7-5
MCM32256A	2.7-5
MCM32257Z	2.7-3
MCM32512	2.7-5
MCM32512A	2.7-5
MCM3264Z	2.7-3
MCM36100A	2.7-5
MCM36200A	2.7-5
MCM36232Z	2.7-3
MCM36256	2.7-5
MCM36512	2.7-5
MCM40100	2.7-5
MCM40200	2.7-5
MCM40256	2.7-5
MCM40512	2.7-5
MCM4180	2.7-3
MCM5L4100A	2.7-4
MCM5L4400A	2.7-4
MCM5L4800A	2.7-4
MCM5V4800A	2.7-4
MCM51L1000A	2.7-4
MCM51L1000A-C	2.7-4
MCM51L1000B	2.7-4
MCM51L4256A	2.7-4
MCM51L4256A-C	2.7-4
MCM51L4256B	2.7-4
MCM511000A	2.7-4
MCM511000A-C	2.7-4
MCM511000B	2.7-4
MCM511001A	2.7-4
MCM511002A	2.7-4
MCM514256A	2.7-4
MCM514256A-C	2.7-4
MCM514256B	2.7-4
MCM514258A	2.7-4
MCM54100A	2.7-4
MCM54100A-C	2.7-4
MCM54101A	2.7-4
MCM54102A	2.7-4
MCM54400A	2.7-4
MCM54400A-C	2.7-4
MCM54402A	2.7-4
MCM54410A	2.7-4
MCM54800A	2.7-4
MCM56824	2.7-3
MCM56824A	2.7-3
MCM60L256A-C	2.7-3
MCM60L256A-V	2.7-3
MCM62L07	2.7-2
MCM62L08	2.7-2
MCM62L09	2.7-2
MCM6205C	2.7-2
MCM6206C	2.7-2
MCM6207	2.7-2
MCM6207C	2.7-2
MCM6208C	2.7-2
MCM6209C	2.7-2
MCM62110	2.7-3
MCM6226	2.7-2
MCM6226A	2.7-2
MCM6227	2.7-2
MCM6229	2.7-2
MCM6229A	2.7-2
MCM62351	2.7-3
MCM62486	2.7-3
MCM62486A	2.7-3
MCM6264C	2.7-2
MCM6265C	2.7-2
MCM6268	2.7-2
MCM6269	2.7-2
MCM6270	2.7-2
MCM62820	2.7-3
MCM62820A	2.7-3
MCM6287	2.7-2
MCM6287B	2.7-2
MCM6288C	2.7-2
MCM6290C	2.7-2
MCM6294	2.7-3
MCM62940	2.7-3
MCM62940A	2.7-3
MCM6295	2.7-3
MCM62950	2.7-3
MCM62950A	2.7-3
MCM62960	2.7-3
MCM62960A	2.7-3
MCM62963	2.7-3
MCM62963A	2.7-3
MCM62973	2.7-3
MCM62973A	2.7-3
MCM62975	2.7-3
MCM62975A	2.7-3
MCM62980	2.7-3
MCM62981	2.7-3
MCM62982	2.7-3
MCM62983	2.7-3
MCM62990	2.7-3
MCM62990A	2.7-3
MCM62995	2.7-3
MCM62995A	2.7-3
MCM62996	2.7-3
MCM6705	2.7-2
MCM6706	2.7-2
MCM6706A	2.7-2
MCM6708	2.7-2
MCM6708A	2.7-2
MCM6709	2.7-2
MCM6709A	2.7-2
MCM6726	2.7-2
MCM6727	2.7-2
MCM6728	2.7-2
MCM67282	2.7-2
MCM6729	2.7-2
MCM8L1000A	2.7-5
MCM8L1430	2.7-5
MCM8L4000A	2.7-5
MCM8L4256	2.7-5
MCM81000A	2.7-5
MCM81001	2.7-5
MCM81002	2.7-5
MCM81430	2.7-5
MCM8256Z	2.7-3
MCM84000A	2.7-5
MCM84030	2.7-5
MCM84256	2.7-5
MCM9L1000A	2.7-5
MCM9L1430	2.7-5
MCM9L4000A	2.7-5
MCM9L4256	2.7-5
MCM9L4256A	2.7-5
MCM91000A	2.7-5
MCM91001	2.7-5
MCM91002	2.7-5
MCM91430	2.7-5
MCM94000A	2.7-5
MCM94030	2.7-5
MCM94256	2.7-5
MCM94256A	2.7-5
MCR100-3	5.5-2
MCR100-4	5.5-2
MCR100-6	5.5-2
MCR100-8	5.5-2
MCR102	5.5-2
MCR103	5.5-2
MCR106-2	5.5-3
MCR106-3	5.5-3
MCR106-4	5.5-3
MCR106-6	5.5-3
MCR106-8	5.5-3
MCR1906-4	5.5-3
MCR1906-6	5.5-3
MCR1906-8	5.5-3
MCR218-10	5.5-4
MCR218-10FP	5.5-4
MCR218-2	5.5-4
MCR218-2FP	5.5-4
MCR218-3	5.5-4
MCR218-4	5.5-4
MCR218-4FP	5.5-4
MCR218-6	5.5-4
MCR218-6FP	5.5-4
MCR218-8	5.5-4
MCR218-8FP	5.5-4
MCR22-2	5.5-2
MCR22-3	5.5-2
MCR22-4	5.5-2

DEVICE	PAGE
MCR22-6	5.5-2
MCR22-8	5.5-2
MCR225-10FP	5.5-7
MCR225-2FP	5.5-7
MCR225-4FP	5.5-7
MCR225-6FP	5.5-7
MCR225-8FP	5.5-7
MCR229B	5.5-9
MCR229D	5.5-9
MCR230A	5.5-7
MCR230A3	5.5-8
MCR230B	5.5-7
MCR230B3	5.5-8
MCR230D	5.5-7
MCR230D3	5.5-8
MCR230F	5.5-7
MCR230F3	5.5-8
MCR230M	5.5-7
MCR230M3	5.5-8
MCR231A	5.5-8
MCR231A3	5.5-8
MCR231B	5.5-8
MCR231B3	5.5-8
MCR231D	5.5-8
MCR231D3	5.5-8
MCR231F	5.5-8
MCR231F3	5.5-8
MCR231M	5.5-8
MCR231M3	5.5-8
MCR2323AH	6.3-18
MCR2323H	6.3-18
MCR264-10	5.5-9
MCR264-4	5.5-9
MCR264-6	5.5-9
MCR264-8	5.5-9
MCR265-10	5.5-10
MCR265-2	5.5-10
MCR265-4	5.5-10
MCR265-6	5.5-10
MCR265-8	5.5-10
MCR299A	5.5-9
MCR299M	5.5-9
MCR310-10	5.5-5
MCR310-2	5.5-5
MCR310-3	5.5-5
MCR310-4	5.5-5
MCR310-6	5.5-5
MCR310-8	5.5-5
MCR3835-10	5.5-8
MCR3918-10A	5.5-6
MCR3918-2A	5.5-6
MCR3918-3A	5.5-6
MCR3918-4A	5.5-6
MCR3918-6A	5.5-6
MCR3918-8A	5.5-6
MCR3935-10A	5.5-8
MCR3935-4A	5.5-8
MCR3935-6A	5.5-8
MCR3935-8A	5.5-8
MCR506-2	5.5-4
MCR506-3	5.5-4
MCR506-4	5.5-4
MCR506-6	5.5-4
MCR506-8	5.5-4
MCR6200A	5.5-6
MCR6200B	5.5-6
MCR6200D	5.5-6
MCR6200M	5.5-6
MCR63-10A	5.5-10
MCR63-2A	5.5-10
MCR63-3A	5.5-10
MCR63-4A	5.5-10
MCR63-6A	5.5-10
MCR63-8A	5.5-10
MCR64-10	5.5-10
MCR64-2	5.5-10
MCR64-3	5.5-10
MCR64-4	5.5-10
MCR64-6	5.5-10
MCR64-8	5.5-10
MCR65-10	5.5-10
MCR65-3	5.5-10
MCR65-4	5.5-10
MCR65-6	5.5-10
MCR65-8	5.5-10
MCR68-2	5.5-5
MCR68-3	5.5-5
MCR68-6	5.5-5
MCR69-2	5.5-7
MCR69-3	5.5-7
MCR69-6	5.5-7
MCR70-2A	5.5-9
MCR70-3A	5.5-9
MCR70-6A	5.5-9
MCR703A	5.5-4
MCR703A1	5.5-3
MCR704A	5.5-4
MCR704A1	5.5-3
MCR706A	5.5-4
MCR706A1	5.5-3
MCR708A	5.5-4
MCR708A1	5.5-3
MCR71-2	5.5-10
MCR71-3	5.5-10
MCR71-6	5.5-10
MCR72-10	5.5-5
MCR72-2	5.5-5
MCR72-3	5.5-5
MCR72-4	5.5-5
MCR72-6	5.5-5
MCR72-8	5.5-5
MCS3201	2.5-2
MCT2	5.6-3
MCT2E	5.6-3
MCT2E,S,F	5.6-7
MCT2S,F	5.6-7
MCT271	5.6-3
MCT271S,F	5.6-7
MCT272	5.6-3
MCT272S,F	5.6-7
MCT273	5.6-3
MCT273S,F	5.6-7
MCT274	5.6-3
MCT274S,F	5.6-7
MCT275	5.6-3
....	5.6-4
MCT275S,F	5.6-7
MCT275S,F	5.6-9
MC10/100E016	3.1-34
MC10/100E101	3.1-34
MC10/100E104	3.1-34
MC10/100E107	3.1-34
MC10/100E111	3.1-16
....	3.1-34
....	3.1-50
MC10/100E112	3.1-34
MC10/100E116	3.1-34
MC10/100E122	3.1-34
MC10/100E131	3.1-34
MC10/100E136	3.1-34
MC10/100E137	3.1-34
MC10/100E141	3.1-34
MC10/100E142	3.1-34
MC10/100E143	3.1-34
MC10/100E150	3.1-34
MC10/100E151	3.1-34
MC10/100E154	3.1-34
MC10/100E155	3.1-34
MC10/100E156	3.1-34
MC10/100E157	3.1-34
MC10/100E158	3.1-34
MC10/100E160	3.1-34
MC10/100E163	3.1-34
MC10/100E164	3.1-34
MC10/100E166	3.1-34
MC10/100E167	3.1-34
MC10/100E171	3.1-34
MC10/100E175	3.1-34
MC10/100E193	3.1-34
MC10/100E195	3.1-16
....	3.1-34
....	3.1-50
MC10/100E196	3.1-16
....	3.1-34
....	3.1-50
MC10/100E211	3.1-16
....	3.1-34
....	3.1-50
MC10/100E212	3.1-34
MC10/100E241	3.1-34
MC10/100E256	3.1-35
MC10/100E336	3.1-35
MC10/100E337	3.1-35
MC10/100E404	3.1-35
MC10/100E416	3.1-35
MC10/100E431	3.1-35
MC10/100E445	3.1-35
MC10/100E446	3.1-35
MC10/100E451	3.1-35
MC10/100E452	3.1-35
MC10/100E457	3.1-35
MC10/100H124	3.1-52
MC10/100H125	3.1-52
MC10/100H600	3.1-52
MC10/100H601	3.1-52
MC10/100H602	3.1-52
MC10/100H603	3.1-52
MC10/100H640	3.1-16
MC10/100H640	3.1-50
MC10/100H641	3.1-16
....	3.1-50
MC10/100H642	3.1-16
....	3.1-50
MC10/100H643	3.1-16
MC10/100H643	3.1-50
MC10/100H644	3.1-16
....	3.1-50
MC10/100H645	3.1-16
MC10/100H645	3.1-50
MC10/100H660	3.1-19
....	3.1-53
MC10E197	3.1-34
MC10H016	3.1-32
MC10H100	3.1-32
MC10H101	3.1-32
MC10H102	3.1-32
MC10H103	3.1-32
MC10H104	3.1-32
MC10H105	3.1-32
MC10H106	3.1-32
MC10H107	3.1-32
MC10H109	3.1-32
MC10H113	3.1-32
MC10H115	3.1-32
MC10H116	3.1-32
MC10H117	3.1-32
MC10H118	3.1-32
MC10H119	3.1-32
MC10H121	3.1-32
MC10H123	3.1-32
MC10H124	3.1-32
MC10H125	3.1-32
MC10H130	3.1-32
MC10H131	3.1-32
MC10H135	3.1-32
MC10H136	3.1-32
MC10H141	3.1-32
MC10H145	3.1-32
MC10H158	3.1-32
MC10H159	3.1-32
MC10H160	3.1-32
MC10H161	3.1-32
MC10H162	3.1-32
MC10H164	3.1-32
MC10H165	3.1-32
MC10H166	3.1-32
MC10H171	3.1-32
MC10H172	3.1-33
MC10H173	3.1-33
MC10H174	3.1-33
MC10H175	3.1-33
MC10H176	3.1-33
MC10H179	3.1-33
MC10H180	3.1-33
MC10H181	3.1-33
MC10H186	3.1-33
MC10H188	3.1-33
MC10H189	3.1-33
MC10H209	3.1-33
MC10H210	3.1-33
MC10H211	3.1-33
MC10H330	3.1-33
MC10H332	3.1-33
MC10H334	3.1-33

DEVICE	PAGE
MC10H350	3.1-18
	3.1-33
MC10H350	3.1-52
MC10H351	3.1-18
	3.1-33
	3.1-52
MC10H352	3.1-18
MC10H352	3.1-33
	3.1-52
MC10H423	3.1-33
MC10H424	3.1-18
	3.1-33
	3.1-52
MC10H600	3.1-33
MC10H600/100H600	3.1-18
MC10H601	3.1-33
MC10H601/100H601	3.1-18
MC10H602	3.1-33
MC10H602/100H602	3.1-18
MC10H603	3.1-33
MC10H603/100H603	3.1-18
MC10H640	3.1-33
MC10H641	3.1-33
MC10H642	3.1-33
MC10H643	3.1-33
MC10H644	3.1-33
MC10H645	3.1-33
MC10H660	3.1-33
MC10H680	3.1-33
MC10H681	3.1-33
MC10100	3.1-30
MC10101	3.1-30
MC10102	3.1-30
MC10103	3.1-30
MC10104	3.1-30
MC10105	3.1-30
MC10106	3.1-30
MC10107	3.1-30
MC10109	3.1-30
MC10110	3.1-30
MC10111	3.1-30
MC10113	3.1-30
MC10114	3.1-30
MC10115	3.1-30
MC10116	3.1-30
MC10117	3.1-30
MC10118	3.1-30
MC10119	3.1-30
MC10121	3.1-30
MC10123	3.1-30
MC10124	3.1-18
	3.1-30
MC10125	3.1-18
	3.1-30
MC10128	3.1-30
MC10129	3.1-30
MC10130	3.1-30
MC10131	3.1-30
MC10132	3.1-30
MC10133	3.1-30
MC10134	3.1-30
MC10135	3.1-30
MC10136	3.1-30
MC10138	3.1-30
MC10141	3.1-30
MC10153	3.1-30
MC10154	3.1-30
MC10158	3.1-31
MC10159	3.1-31
MC10160	3.1-31
MC10161	3.1-31
MC10162	3.1-31
MC10163	3.1-31
MC10164	3.1-31
MC10165	3.1-31
MC10166	3.1-31
MC10168	3.1-31
MC10170	3.1-31
MC10171	3.1-31
MC10172	3.1-31
MC10173	3.1-31
MC10174	3.1-31
MC10175	3.1-31
MC10176	3.1-31
MC10177	3.1-18
	3.1-31
	3.1-52
MC10178	3.1-31
MC10180	3.1-31
MC10181	3.1-31
MC10186	3.1-31
MC10188	3.1-31
MC10189	3.1-31
MC10190	3.1-18
	3.1-31
	3.1-52
MC10192	3.1-31
MC10193	3.1-31
MC10195	3.1-31
MC10197	3.1-31
MC10198	3.1-31
MC10210	3.1-31
MC10211	3.1-31
MC10212	3.1-31
MC10216	3.1-31
MC10231	3.1-31
MC10319	4.5-2
MC10319DW	4.11-4
MC10320	4.8-4
MC10320-1	4.8-4
MC10321	4.5-2
MC10321DW	4.11-4
MC10804	3.1-31
MC10805	3.1-31
MC12000	4.7-23
MC12002	3.1-17
MC12002	3.1-50
	4.7-23
MC12009	3.1-16
	3.1-50
MC12009	4.7-23
MC12011	3.1-16
	3.1-50
	4.7-23
MC12013	3.1-16
	3.1-51
	4.7-23
MC12014	3.1-18
	3.1-51
MC12015	3.1-16
	3.1-51
MC12015	4.7-23
MC12016	3.1-17
	3.1-51
	4.7-23
MC12017	3.1-17
	3.1-51
	4.7-23
MC12018	3.1-17
	3.1-51
	4.7-23
MC12019	3.1-16
	3.1-51
	4.7-23
MC12022A	3.1-17
	3.1-51
	4.7-23
MC12022B	3.1-17
	3.1-51
MC12022B	4.7-23
MC12022LVA	3.1-17
	3.1-51
MC12022LVB	3.1-17
	3.1-51
MC12022SLA	3.1-17
	3.1-51
MC12022SLB	3.1-17
	3.1-51
MC12022TSB	3.1-17
	3.1-51
MC12022TVA	3.1-17
MC12022TVA	3.1-51
MC12022TVB	3.1-17
	3.1-51
MC12023	3.1-17
	3.1-51
	4.7-23
MC12025	3.1-17
	3.1-51
MC12028A	3.1-16
	3.1-51
MC12028B	3.1-16
	3.1-51
MC12032A	3.1-17
	3.1-51
MC12032B	3.1-17
	3.1-51
MC12034A	3.1-16
	3.1-51
	3.1-16
	3.1-51
MC12040	3.1-17
	3.1-51
	4.7-23
MC12061	3.1-17
	3.1-51
	4.7-23
MC12073	3.1-17
	3.1-51
MC12073	4.7-23
MC12074	3.1-17
	3.1-51
	4.7-23
MC12076	3.1-17
	3.1-51
MC12078	3.1-17
	3.1-51
MC12090	3.1-16
	3.1-51
	4.7-23
MC13001X	4.8-4
MC13002X	4.8-4
MC13022DW	4.11-4
MC13023D	4.11-4
MC13024DW	4.11-4
MC13055	4.7-2
MC13055D	4.11-4
MC13060D	4.11-4
MC13101	4.7-2
MC13135	4.7-3
MC13156	4.7-2
MC13175	4.7-3
MC1330A	4.8-4
MC1350	4.1-7
	4.8-4
MC1350D	4.11-2
MC1357	4.8-3
MC1357D	4.11-2
MC1373	4.8-3
MC1374	4.8-3
MC1377	4.8-3
MC1377DW	4.11-2
MC1378	4.8-3
MC1378FN	4.11-2
MC1381	4.8-4
MC1382	4.8-4
MC1382DW	4.11-2
MC1383	4.8-4
MC1384	4.8-4
MC1388	4.8-4
MC1391	4.8-3
MC14C88B	4.6-5
	4.6-6
MC14C88BD	4.11-3
MC14C89AB	4.6-5
	4.6-6
MC14C89ABD,BD	4.11-3
MC14C89B	4.6-5
	4.6-6
MC14000UB	3.1-38
MC14001B	3.1-38
MC14001UB	3.1-38
MC14002B	3.1-38
MC14002UB	3.1-38
MC14006B	3.1-38
MC14007UB	3.1-38
MC14008B	3.1-38
MC14011B	3.1-38
MC14011UB	3.1-38
MC14012B	3.1-38
MC14012UB	3.1-38
MC14013B	3.1-38
MC14014B	3.1-38
MC14015B	3.1-38
MC14016B	3.1-38
MC14017B	3.1-38
MC14018B	3.1-38
MC14020B	3.1-38
MC14021B	3.1-38
MC14022B	3.1-38
MC14023B	3.1-38
MC14023UB	3.1-38
MC14024B	3.1-38
MC14025B	3.1-38
MC14025UB	3.1-38
MC14027B	3.1-38
MC14028B	3.1-38

DEVICE	PAGE
MC14029B	3.1-38
MC1403	4.4-2
MC1403A	4.4-2
MC1403D	4.11-2
MC14032B	3.1-38
MC14034B	3.1-38
MC14035B	3.1-38
MC14038B	3.1-38
MC1404AU10	4.4-2
MC1404AU5	4.4-2
MC1404AU6	4.4-2
MC1404U10	4.4-2
MC1404U5	4.4-2
MC1404U6	4.4-2
MC14040B	3.1-38
MC14042B	3.1-38
MC14043B	3.1-39
MC14044B	3.1-39
MC14046B	3.1-39
MC14049B	3.1-39
MC14049UB	3.1-39
MC14050B	3.1-39
MC14051B	3.1-39
MC14052B	3.1-39
MC14053B	3.1-39
MC14060B	3.1-39
MC14066B	3.1-39
MC14067B	3.1-39
MC14068B	3.1-39
MC14069UB	3.1-39
MC14070B	3.1-39
MC14071B	3.1-39
MC14072B	3.1-39
MC14073B	3.1-39
MC14075B	3.1-39
MC14076B	3.1-39
MC14077B	3.1-39
MC14078B	3.1-39
MC14081B	3.1-39
MC14082B	3.1-39
MC14093B	3.1-39
MC14094B	3.1-39
MC14097B	3.1-39
MC14099B	3.1-39
MC14106B	3.1-39
MC1411,B	4.6-7
	4.6-8
MC1412,B	4.6-7
	4.6-8
MC1413,B	4.6-7
	4.6-8
MC1413D	4.11-3
MC1416,B	4.6-7
	4.6-8
MC14160B	3.1-39
MC14161B	3.1-39
MC14162B	3.1-39
MC141620	4.8-3
MC14163B	3.1-39
MC14174B	3.1-39
MC14175B	3.1-39
MC14194B	3.1-39
MC142100	4.7-7
MC142100DW	4.11-7

DEVICE	PAGE
MC142103	4.11-7
MC143120	2.6-3
MC143150	2.6-2
MC143160EVK	2.6-4
MC143403	4.1-6
MC143403D	4.11-7
MC143404	4.1-6
MC1436	4.1-3
MC1436D,CD	4.11-3
MC14410DW	4.11-7
MC14411	4.7-19
MC14411DW	4.11-7
MC144110	2.4-13
MC144110DW	4.11-6
MC144111	2.4-13
MC144111DW	4.11-6
MC14415B	3.1-40
MC14433	4.5-2
MC14433DW	4.11-6
MC14442	4.5-2
MC14442FN	4.11-6
MC14443DW	4.11-6
MC14447DW	4.11-6
MC1445	4.1-7
MC14467	4.11-7
MC14467-1	4.10-4
MC14468	4.10-4
	4.11-7
MC14469	4.10-3
	4.8-6
MC14469FN	4.11-7
MC14470	4.10-4
MC14489	2.4-13
MC14489DW	4.11-6
MC14490B	3.1-40
MC14495DW1	4.11-6
MC14497	4.10-3
	4.11-7
	4.8-6
MC14499	2.4-13
MC14499DW	4.11-6
MC14500B	3.1-40
MC145000	2.4-13
MC145000FN	4.11-6
MC145001	2.4-13
MC145001FN	4.11-6
MC14501UB	3.1-40
MC145010	4.10-4
MC145010DW	4.11-7
MC145011	4.10-4
MC145011DW	4.11-7
MC14502B	3.1-40
MC145026	4.10-3
	4.8-6
MC145026D	4.11-7
MC145027	4.10-3
	4.8-6
MC145027DW	4.11-7
MC145028	4.10-3
	4.8-6
MC145028DW	4.11-7
MC14503B	3.1-40
MC145030	4.10-3
	4.8-6
MC145030DW	4.11-7

DEVICE	PAGE
MC145033	4.10-3
	4.8-6
MC145033DW	4.11-7
MC145034	4.10-3
	4.8-6
MC145034DW	4.11-7
MC145035	4.10-3
	4.8-6
MC145035DW	4.11-7
MC14504B	3.1-18
	3.1-40
MC14504B	3.1-52
MC145040	2.4-13
	4.5-2
MC145040FN1	4.11-6
MC145040FN2	4.11-6
MC145041	2.4-13
	4.5-2
MC145041FN1	4.11-6
MC145041FN2	4.11-6
MC145050	2.4-13
	4.5-2
MC145050DW	4.11-6
MC145051	2.4-13
	4.5-2
MC145051DW	4.11-6
MC145053	2.4-13
	4.5-2
MC145053DW	4.11-6
MC14506UB	3.1-40
MC14508B	3.1-40
MC14510B	3.1-40
MC145100	4.7-7
MC145106	4.7-22
	4.7-22
MC145106FN	4.11-6
MC14511B	3.1-40
MC14512B	3.1-40
MC14513B	3.1-40
MC14514B	3.1-40
MC145145DW1	4.11-6
MC145145-2	4.7-22
MC145145-2	4.7-22
MC145146DW1	4.11-6
MC145146-2	4.7-22
MC145146-2	4.7-22
MC145149	2.4-13
MC145149	4.7-22
MC14515B	3.1-40
MC145151FN2	4.11-6
MC145151-2	4.7-22
MC145152FN2	4.11-6
MC145152-2	4.7-22
MC145155	2.4-13
MC145155DW2	4.11-6
MC145155FN2	4.11-6
MC145155-2	4.7-22
MC145156	2.4-13
MC145156DW2	4.11-6
MC145156FN2	4.11-6
MC145156-2	4.7-22
MC145156-2	4.7-22
MC145157	2.4-13
MC145157DW2	4.11-6
MC145157FN2	4.11-6

DEVICE	PAGE
MC145157-2	4.7-22
MC145158	2.4-13
MC145158DW2	4.11-6
MC145158FN2	4.11-6
MC145158-2	4.7-22
MC145159	2.4-13
MC145159FN	4.11-6
MC145159-1	4.7-22
MC14516B	3.1-40
MC145160	4.7-22
MC145160DW	4.11-6
MC145161	4.7-22
MC145161DW	4.11-6
MC145166	4.7-22
MC145166DW	4.11-6
MC145167	2.4-13
MC145167	4.7-22
MC145167DW	4.11-6
MC145168	4.7-22
MC145168DW	4.11-6
MC145169	2.4-13
MC145169	4.7-22
MC145169	4.7-22
MC14517B	3.1-40
MC145170	2.4-13
MC145170	4.7-22
MC145170D	4.11-6
MC14518B	3.1-40
MC14519B	3.1-40
MC14520B	3.1-40
MC14521B	3.1-40
MC14522B	3.1-40
MC14526B	3.1-40
MC14527B	3.1-40
MC14529B	3.1-40
MC14530B	3.1-40
MC14531B	3.1-40
MC14532B	3.1-40
MC14534B	3.1-40
MC14536B	3.1-40
MC14538B	3.1-40
MC14539B	3.1-40
MC145403	4.6-7
	4.6-8
MC145403DW	4.11-7
MC145404	4.6-7
	4.6-8
MC145404DW	4.11-7
MC145405	4.6-7
	4.6-8
MC145405DW	4.11-7
MC145406	2.5-4
MC145406	4.6-7
MC145406	4.6-8
MC145406DW	4.11-7
MC145407	2.5-4
	4.6-7
	4.6-8
MC145407DW	4.11-7
MC145408	4.6-7
	4.6-8
MC145408DW	4.11-7
MC14541B	3.1-40

DEVICE	PAGE
MC145411	4.7-19
MC145412	4.11-7
MC145412/13/16	4.7-13
MC145414	4.7-6
MC145416DW	4.11-7
MC145421	4.7-12
MC145421DW	4.11-7
MC145422	4.7-11
MC145422DW	4.11-7
MC145425	4.7-12
MC145425DW	4.11-7
MC145426	4.7-11
MC145426DW	4.11-7
MC145428	4.7-12
MC145428DW	4.11-7
MC145429	4.7-13
MC14543B	3.1-40
MC145432	4.7-6
MC145436	4.7-7
MC145436DW	4.11-7
MC145439	4.11-7
MC14544B	3.1-41
MC145442	4.7-19
MC145442DW	4.11-7
MC145443	4.7-19
MC145443DW	4.11-7
MC145444	4.7-19
MC145447	4.7-20
MC145447DW	4.11-7
MC145453	2.4-13
MC145453FN	4.11-6
MC145460EVK	4.7-20
MC14547B	3.1-41
MC145472	4.7-9
MC145472FE	4.11-7
MC145474	4.7-9
MC145475	4.7-9
MC145475DW	4.11-7
MC145480	4.7-6
MC145488	4.7-10
MC145488FN	4.11-7
MC14549B	3.1-41
MC14549B/MC14559B	4.5-2
MC145494EVK	4.7-10
MC1455BP1	4.10-2
MC1455D	4.11-3
MC1455P1,U	4.10-2
MC145500	4.7-6
MC145502FN	4.11-7
MC145503DW	4.11-7
MC145505DW	4.11-7
MC14551B	3.1-41
MC145512/13	4.7-13
MC14553B	3.1-41
MC145532	4.7-19
MC145532DW	4.11-7
MC145536EVK	4.7-7
MC145540	4.7-6
MC14555B	3.1-41
MC145554/57/64/67	4.7-6
MC145554DW	4.11-7
MC145557DW	4.11-7
MC14556B	3.1-41
MC145564DW	4.11-7
MC145567DW	4.11-7
MC14557B	3.1-41
MC14558B	3.1-41
MC14559B	3.1-41
MC14560B	3.1-41
MC14561B	3.1-41
MC14562B	3.1-41
MC14566B	3.1-41
MC14568B	3.1-41
MC14569B	3.1-41
MC145705	2.5-4
	4.6-7
	4.6-8
MC145705DW	4.11-7
MC145706	2.5-4
	4.6-7
MC145706	4.6-8
MC145706DW	4.11-7
MC145707	2.5-4
	4.6-7
	4.6-8
MC145707DW	4.11-7
MC14572UB	3.1-41
MC14573	4.1-8
	4.1-8
MC14573D	4.11-6
MC14574	4.1-9
MC14574D	4.11-6
MC14575	4.1-8
MC14575	4.1-8
	4.1-9
MC14575D	4.11-6
MC14576B	4.1-8
	4.8-4
MC14576BF	4.11-6
MC14577B	4.1-8
	4.8-4
MC14577BF	4.11-6
MC14578	4.1-9
	4.10-4
MC14578D	4.11-6
MC1458	4.1-4
MC1458C	4.1-4
MC1458D,CD	4.11-3
MC14580B	3.1-41
MC14582B	3.1-41
MC14583B	3.1-41
MC14584B	3.1-41
MC14585B	3.1-41
MC14597B	3.1-41
MC14598B	3.1-41
MC14599B	3.1-41
MC1468	4.2-5
MC146805E2	2.4-13
MC146818	2.4-13
MC146818A	2.4-13
MC146823	2.4-13
MC1472	4.6-7
	4.6-8
MC1488	4.6-5
	4.6-6
MC1488D	4.11-3
MC1489	4.6-5
	4.6-6
MC1489A	4.6-5
	4.6-6
MC1489D	4.11-3
MC1490	4.1-7
MC1490P/MC1350P	4.1-7
MC1494L	4.10-2
MC1495D	4.11-3
MC1495L	4.10-2
MC1496	4.7-3
MC1496/MC1596	4.7-23
MC1496D	4.11-3
MC1503	4.4-2
MC1503A	4.4-2
MC1504U10	4.4-2
MC1504U5	4.4-2
MC1504U6	4.4-2
MC1536	4.1-3
MC1545	4.1-7
MC1545/1445	4.1-7
MC1558	4.1-5
MC1568	4.2-5
MC1594L	4.10-2
MC1595L	4.10-2
MC1596	4.7-3
MC1648	3.1-53
	4.7-23
MC1650	3.1-53
MC1651	3.1-53
MC1652	3.1-53
MC1658	3.1-53
MC1658	4.7-23
MC1660	3.1-53
MC1662	3.1-53
MC1670	3.1-53
MC1672	3.1-53
MC1690	4.7-23
MC1692	3.1-53
MC1723	4.2-4
MC1723CD	4.11-3
MC1741	4.1-3
MC1741C	4.1-3
MC1741CD	4.11-3
MC1747	4.1-5
MC1747C	4.1-4
MC1747CD	4.11-3
MC1748C	4.1-2
MC1776	4.1-3
MC1776C	4.1-3
MC1776CD	4.11-3
MC26LS30	4.6-6
MC26LS31	4.6-6
MC26LS31D	4.11-3
MC26LS32	4.6-6
	4.6-6
MC26LS32D	4.11-3
MC26S10	4.6-5
MC26S10D	4.11-3
MC2661	2.2-7
	2.2-7
MC2831A	4.7-3
MC2831AD	4.11-3
MC2833	4.7-3
	4.7-4
MC3301/LM2900	4.1-6
MC3302	4.1-9
MC33023	4.2-7
MC33023DW,FN	4.11-4
MC33025DW,FN	4.11-4
MC3303	4.1-6
MC3303D	4.11-3
MC33030P	4.3-6
MC33033	4.3-4
MC33033DW	4.11-4
MC33033P, DW	4.3-5
MC33035	4.3-4
MC33035DW	4.11-4
MC33035P, DW	4.3-5
MC33039D	4.11-4
MC33039P, D	4.3-5
MC33060A	4.2-6
MC33063A	4.2-7
MC33064D-5	4.11-4
MC33065	4.2-8
MC33065	4.2-8
	4.2-9
MC33065	4.2-9
MC33065DW	4.11-4
MC33065DW-H	4.11-4
MC33065DW-L	4.11-4
MC33066DW	4.11-4
	4.11-5
MC33067DW	4.11-4
	4.11-5
MC33071	4.1-3
MC33071A	4.1-3
MC33071D,AD	4.11-4
MC33072	4.1-4
MC33072A	4.1-4
MC33072D,AD	4.11-4
MC33074	4.1-6
MC33074A	4.1-6
MC33074D,AD	4.11-4
MC33076	4.1-4
MC33076D	4.11-4
MC33077	4.1-4
MC33077D	4.11-4
MC33078	4.1-4
MC33078D	4.11-4
MC33079	4.1-6
MC33079D	4.11-4
MC33091	4.9-2
MC33091D	4.11-4
MC33110D	4.11-4
MC33120	4.7-8
MC33120DW	4.11-4
MC33129	4.2-6
MC33151D	4.11-4
MC33151P,D	4.2-13
MC33152D	4.11-4
MC33152P,D	4.2-13
MC33160	4.2-5
MC33160P	4.2-12
MC33161P,D	4.2-12

DEVICE	PAGE
MC33163	4.2-7
MC33164D-3	4.11-4
MC33164D-5	4.11-4
MC33165	4.2-7
MC33171	4.1-3
MC33171D	4.11-4
MC33172	4.1-4
MC33172D	4.11-4
MC33174	4.1-6
MC33174D	4.11-4
MC33178	4.1-4
MC33178D	4.11-4
MC33179	4.1-6
MC33179D	4.11-4
MC33181	4.1-3
MC33182	4.1-4
MC33184	4.1-6
MC33272	4.1-4
MC33272D	4.11-4
MC33274	4.1-6
MC33274D	4.11-4
MC33282	4.1-4
MC33282D	4.11-4
MC33284	4.1-6
MC33284D	4.11-4
MC33294	4.9-2
MC3334	4.9-2
MC3335	4.7-3
MC3335DW	4.11-3
MC3346	4.8-3
MC3346D	4.11-3
MC3356	4.7-2
MC3356DW	4.11-3
MC3357	4.7-2
MC3358	4.1-4
MC3359	4.7-2
MC3359DW	4.11-3
MC3361AD	4.11-3
MC3361B	4.7-2
MC3362	4.7-3
MC3362DW	4.11-3
MC3363	4.7-3
	4.7-4
MC3363DW	4.11-3
MC3367	4.7-2
7	4.7-5
MC3367DW	4.11-3
MC3371	4.7-2
MC3371D	4.11-3
MC3372	4.7-2
MC3372D	4.11-3
MC3373	4.8-3
MC3373P	4.10-3
	4.8-6
MC3391	4.9-2
MC3391DW	4.11-3
MC3399	4.9-2
MC3399T	4.3-3
MC3399T	4.9-3
MC34001	4.1-3
MC34001B	4.1-3
MC34001D,BD	4.11-4
MC34002	4.1-4
MC34002B	4.1-4
MC34002D,BD	4.11-4
MC34004	4.1-5
MC34004B	4.1-5
MC3401/LM3900	4.1-5
MC3401D	4.11-3
MC34010/11A	4.7-13
MC34011AFN	4.11-4
MC34012	4.7-14
MC34012-1D	4.11-4
MC34012-2D	4.11-4
MC34012-3D	4.11-4
MC34014	4.7-15
MC34014DW	4.11-4
MC34017	4.7-14
MC34017-1D	4.11-4
MC34017-2D	4.11-4
MC34017-3D	4.11-4
MC34018	4.7-16
MC34018DW	4.11-4
MC34023	4.2-7
MC34023DW,FN	4.11-4
MC34025DW,FN	4.11-4
MC3403	4.1-5
MC3403D	4.11-3
MC3405	4.1-8
MC3405	4.1-9
MC3405/MC350	4.1-8
MC34050	4.6-6
MC34050D	4.11-4
MC34051	4.6-6
MC34051D	4.11-5
MC34060	4.2-6
MC34060A	4.2-6
MC34060AD	4.11-5
MC34063A	4.2-7
MC34063AD	4.11-5
MC34064D-5	4.11-5
MC34065	4.2-8
MC34065	4.2-8
MC34065	4.2-8
MC34065	4.2-9
	4.2-9
MC34065DW	4.11-5
MC34065DW-H	4.11-5
MC34065DW-L	4.11-5
MC34071	4.1-3
MC34071A	4.1-3
MC34071D,AD	4.11-5
MC34072	4.1-4
MC34072A	4.1-4
MC34072D,AD	4.11-5
MC34074	4.1-5
MC34074A	4.1-5
MC34074D,AD	4.11-5
MC34080	4.1-3
MC34080D	4.11-5
MC34081	4.1-3
MC34081D	4.11-5
MC34082	4.1-4
MC34083	4.1-4
MC34084	4.1-5
MC34084DW,ADW	4.11-5
MC34085	4.1-5
MC34085DW,ADW	4.11-5
MC34114	4.7-15
MC34114DW	4.11-5
MC34115	4.7-21
MC34117	4.7-14
MC34118	4.7-17
MC34118DW	4.11-5
MC34119D	4.11-5
MC34129	4.2-6
MC34129D	4.11-5
MC34151D	4.11-5
MC34151P,D	4.2-13
MC34152D	4.11-5
MC34152P,D	4.2-13
MC34160	4.2-5
MC34160P	4.2-12
MC34161P,D	4.2-12
MC34163	4.2-7
MC34164D-3	4.11-5
MC34164D-5	4.11-5
MC34165	4.2-7
MC3417/18	4.7-21
MC34181	4.1-3
MC34181D	4.11-5
MC34182	4.1-4
MC34182D	4.11-5
MC34184	4.1-5
MC34184D	4.11-5
MC3419-1L	4.7-8
MC34214	4.7-15
MC3423D	4.11-3
MC3423P1,U	4.2-10
MC3425P1	4.2-10
MC3430	4.1-9
MC3431	4.1-9
MC3432	4.1-9
MC3433	4.1-9
MC3437	4.6-5
MC3446A	4.6-5
MC3447	4.6-5
MC3448A	4.6-5
MC3448AD	4.11-3
MC3450	4.6-5
MC3450	4.6-6
MC3450D	4.11-3
MC3452	4.6-5
	4.6-6
MC3452D	4.11-3
MC3453	4.6-5
MC3453	4.6-6
MC3456D	4.11-3
MC3456L,P	4.10-2
MC3458	4.1-4
MC3458D	4.11-3
MC3469P	4.6-2
MC3470AP	4.6-3
MC3470P	4.6-3
MC3471P	4.6-2
MC3476	4.1-3
MC3479P	4.3-6
MC3481	4.6-6
MC3484	4.9-2
MC3484S2-2,S4-2	4.3-3
MC3485	4.6-6
MC3486	4.6-5
	4.6-6
MC3486D	4.11-3
MC3487	4.6-5
	4.6-6
MC3487D	4.11-3
MC3488A	4.6-6
MC35001B	4.1-3
MC35002	4.1-5
MC35002B	4.1-5
MC35004	4.1-6
MC35004B	4.1-6
MC3503	4.1-6
MC3505	4.1-8
	4.1-9
MC35063A	4.2-7
MC35071	4.1-3
MC35071A	4.1-3
MC35072	4.1-5
MC35072A	4.1-5
MC35074	4.1-6
MC35074A	4.1-6
MC35080	4.1-3
MC35081	4.1-3
MC35084	4.1-6
MC35085	4.1-6
MC3517/18	4.7-21
MC35172	4.1-5
MC35174	4.1-6
MC3523U	4.2-10
MC3558	4.1-5
MC4016	3.1-18
	3.1-50
MC4018	3.1-18
	3.1-50
MC4024	3.1-18
	3.1-50
MC4024/MC4324	4.7-23
MC4044	3.1-17
	3.1-50
	4.7-23
MC4316	3.1-18
	3.1-50
	4.7-23
MC4324	3.1-18
	3.1-50
MC4344	3.1-17
	3.1-50
	4.7-23
MC44000	4.8-3
MC44010	4.8-3
MC44250	4.5-2
	4.8-4
MC44250FN	4.11-6
MC44301	4.8-4
MC44301DW	4.11-5
MC44602	4.2-7
MC44615	4.8-3
MC44802A	4.8-3
MC44802DW	4.11-5
MC4558	4.1-5
MC4558AC	4.1-4

DEVICE	PAGE
MC4558C	4.1-4
MC4558CD	4.11-3
MC4741	4.1-6
MC4741C	4.1-5
MC4741CD	4.11-3
MC54/74HCT00A	3.1-45
MC54/74HCT04A	3.1-45
MC54/74HCT08A	3.1-45
MC54/74HCT138A	3.1-45
MC54/74HCT14A	3.1-45
MC54/74HCT157A	3.1-45
MC54/74HCT158A	3.1-45
MC54/74HCT161A	3.1-45
MC54/74HCT163A	3.1-45
MC54/74HCT174A	3.1-45
MC54/74HCT240A	3.1-45
MC54/74HCT241A	3.1-45
MC54/74HCT244A	3.1-45
MC54/74HCT245A	3.1-45
MC54/74HCT273A	3.1-45
MC54/74HCT32A	3.1-45
MC54/74HCT373A	3.1-45
MC54/74HCT374A	3.1-45
MC54/74HCT533A	3.1-45
MC54/74HCT534A	3.1-45
MC54/74HCT540	3.1-45
MC54/74HCT541	3.1-45
MC54/74HCT573A	3.1-45
MC54/74HCT574A	3.1-45
MC54/74HCT640A	3.1-45
MC54/74HCT74A	3.1-45
MC54/74HCU04	3.1-41
MC54/74HC00A	3.1-41
MC54/74HC02A	3.1-41
MC54/74HC03A	3.1-41
MC54/74HC04A	3.1-41
MC54/74HC052	3.1-44
MC54/74HC08A	3.1-42
MC54/74HC10	3.1-42
MC54/74HC107	3.1-42
MC54/74HC109	3.1-42
MC54/74HC11	3.1-42
MC54/74HC112	3.1-42
MC54/74HC113	3.1-42
MC54/74HC125A	3.1-42
MC54/74HC126A	3.1-42
MC54/74HC132A	3.1-42
MC54/74HC133	3.1-42
MC54/74HC137	3.1-42
MC54/74HC138A	3.1-42
MC54/74HC139A	3.1-42
MC54/74HC14A	3.1-42
MC54/74HC147	3.1-42
MC54/74HC151	3.1-42
MC54/74HC153	3.1-42
MC54/74HC154	3.1-42
MC54/74HC157A	3.1-42
MC54/74HC158	3.1-42
MC54/74HC160	3.1-42
MC54/74HC161A	3.1-43
MC54/74HC162	3.1-43
MC54/74HC163A	3.1-43
MC54/74HC164	3.1-43
MC54/74HC165	3.1-43
MC54/74HC173	3.1-43
MC54/74HC174A	3.1-43
MC54/74HC175	3.1-43
MC54/74HC194	3.1-43
MC54/74HC195	3.1-43
MC54/74HC20	3.1-42
MC54/74HC237	3.1-43
MC54/74HC240A	3.1-43
MC54/74HC241A	3.1-43
MC54/74HC242	3.1-43
MC54/74HC244A	3.1-43
MC54/74HC245A	3.1-43
MC54/74HC251	3.1-43
MC54/74HC253	3.1-43
MC54/74HC257	3.1-43
MC54/74HC259	3.1-43
MC54/74HC27	3.1-42
MC54/74HC273A	3.1-43
MC54/74HC280	3.1-43
MC54/74HC299	3.1-43
MC54/74HC30	3.1-42
MC54/74HC32A	3.1-42
MC54/74HC354	3.1-43
MC54/74HC365	3.1-43
MC54/74HC366	3.1-43
MC54/74HC367	3.1-43
MC54/74HC368	3.1-43
MC54/74HC373A	3.1-43
MC54/74HC374A	3.1-43
MC54/74HC390	3.1-43
MC54/74HC393	3.1-43
MC54/74HC4002	3.1-44
MC54/74HC4016	3.1-44
MC54/74HC4017	3.1-44
MC54/74HC4020	3.1-44
MC54/74HC4024	3.1-44
MC54/74HC4046A	3.1-44
MC54/74HC4049	3.1-44
MC54/74HC4050	3.1-44
MC54/74HC4051	3.1-44
MC54/74HC4053	3.1-44
MC54/74HC4060	3.1-44
MC54/74HC4066	3.1-44
MC54/74HC4075	3.1-44
MC54/74HC4078	3.1-44
MC54/74HC42	3.1-42
MC54/74HC4316	3.1-44
MC54/74HC4351	3.1-44
MC54/74HC4352	3.1-44
MC54/74HC4353	3.1-44
MC54/74HC4511	3.1-44
MC54/74HC4514	3.1-44
MC54/74HC4538A	3.1-44
MC54/74HC51	3.1-42
MC54/74HC533A	3.1-43
MC54/74HC534A	3.1-43
MC54/74HC540	3.1-43
MC54/74HC541	3.1-44
MC54/74HC563	3.1-44
MC54/74HC564	3.1-44
MC54/74HC573A	3.1-44
MC54/74HC574A	3.1-44
MC54/74HC58	3.1-42
MC54/74HC589	3.1-44
MC54/74HC595A	3.1-44
MC54/74HC597	3.1-44
MC54/74HC640A	3.1-44
MC54/74HC646	3.1-44
MC54/74HC648	3.1-44
MC54/74HC688	3.1-44
MC54/74HC7266	3.1-44
MC54/74HC73	3.1-42
MC54/74HC74A	3.1-42
MC54/74HC75	3.1-42
MC54/74HC76	3.1-42
MC54/74HC85	3.1-42
MC54/74HC86	3.1-42
MC54F/74F00	3.1-26
MC54F/74F02	3.1-26
MC54F/74F04	3.1-26
MC54F/74F08	3.1-26
MC54F/74F10	3.1-26
MC54F/74F109	3.1-26
MC54F/74F11	3.1-26
MC54F/74F125	3.1-26
MC54F/74F126	3.1-26
MC54F/74F13	3.1-26
MC54F/74F132	3.1-26
MC54F/74F138	3.1-26
MC54F/74F139	3.1-26
MC54F/74F14	3.1-26
MC54F/74F148	3.1-26
MC54F/74F151	3.1-26
MC54F/74F153	3.1-26
MC54F/74F164	3.1-27
MC54F/74F168	3.1-27
MC54F/74F169	3.1-27
MC54F/74F174	3.1-27
MC54F/74F175	3.1-27
MC54F/74F181	3.1-27
MC54F/74F182	3.1-27
MC54F/74F20	3.1-26
MC54F/74F240	3.1-27
MC54F/74F241	3.1-27
MC54F/74F242	3.1-27
MC54F/74F243	3.1-27
MC54F/74F244	3.1-27
MC54F/74F245	3.1-27
MC54F/74F251	3.1-27
MC54F/74F253	3.1-27
MC54F/74F256	3.1-27
MC54F/74F259	3.1-27
MC54F/74F269	3.1-27
MC54F/74F280	3.1-27
MC54F/74F283	3.1-27
MC54F/74F32	3.1-26
MC54F/74F350	3.1-27
MC54F/74F352	3.1-27
MC54F/74F353	3.1-27
MC54F/74F365	3.1-27
MC54F/74F366	3.1-27
MC54F/74F367	3.1-27
MC54F/74F368	3.1-27
MC54F/74F37	3.1-26
MC54F/74F373	3.1-27
MC54F/74F374	3.1-27
MC54F/74F378	3.1-28
MC54F/74F379	3.1-28
MC54F/74F381	3.1-28
MC54F/74F382	3.1-28
MC54F/74F398	3.1-28
MC54F/74F399	3.1-28
MC54F/74F521	3.1-28
MC54F/74F533	3.1-28
MC54F/74F534	3.1-28
MC54F/74F537	3.1-28
MC54F/74F538	3.1-28
MC54F/74F539	3.1-28
MC54F/74F568	3.1-28
MC54F/74F569	3.1-28
MC54F/74F574	3.1-28
MC54F/74F579	3.1-28
MC54F/74F64	3.1-26
MC54F/74F640	3.1-28
MC54F/74F657A	3.1-28
MC54F/74F657B	3.1-28
MC54F/74F74	3.1-26
MC54F/74F779	3.1-28
MC54F/74F803	3.1-28
MC54F/74F827	3.1-28
MC54F/74F828	3.1-28
MC54F/74F85	3.1-26
MC54F/74F86	3.1-26
MC660	3.1-54
MC661	3.1-54
MC662	3.1-54
MC663	3.1-54
MC664	3.1-54
MC667	3.1-54
MC668	3.1-54
MC669	3.1-54
MC670	3.1-54
MC671	3.1-54
MC672	3.1-54
MC675	3.1-54
MC678	3.1-54
MC68EC030	2.2-3
MC68HC000	2.2-4
MC68HC001	2.2-4
MC68HC05B4	2.4-10
MC68HC05B6	2.4-10
MC68HC05B8	2.4-10
MC68HC05C4	2.4-10
MC68HC05C5	2.4-10
MC68HC05C8	2.4-10
MC68HC05C9	2.4-10
MC68HC05D24	2.4-10
MC68HC05D9	2.4-10
MC68HC05E0	2.4-10
MC68HC05E1	2.4-10
MC68HC05J1	2.4-10
MC68HC05L10	2.4-10
MC68HC05L7	2.4-10
MC68HC05L9	2.4-10
MC68HC05P1	2.4-10
MC68HC05P4	2.4-10
MC68HC05P7	2.4-10
MC68HC05SC11	2.4-10

DEVICE	PAGE
MC68HC05SC21	2.4-10
MC68HC05SC24	2.4-10
MC68HC05T1	2.4-10
MC68HC11A0	2.4-7
MC68HC11A1	2.4-7
MC68HC11A7	2.4-7
MC68HC11A8	2.4-7
MC68HC11D0	2.4-7
MC68HC11D3	2.4-7
MC68HC11E0	2.4-7
MC68HC11E1	2.4-7
MC68HC11E8	2.4-7
MC68HC11E9	2.4-7
MC68HC11F1	2.4-7
MC68HC11G5	2.4-7
MC68HC11G7	2.4-7
MC68HC11K0	2.4-7
MC68HC11K1	2.4-7
MC68HC11K3	2.4-7
MC68HC11K4	2.4-7
MC68HC11L0	2.4-7
MC68HC11L1	2.4-7
MC68HC11L5	2.4-7, 2.4-45
MC68HC11L6	2.4-7, 2.4-45
MC68HC16Z1	2.4-2
MC68HC68T1	2.5-3
MC68HC705C8	2.4-11, 2.4-68
MC68HC705J2	2.4-11, 2.4-68
MC68HC705L5	2.4-11, 2.4-68
MC68HC711D3	2.4-8
MC68HC711E9	2.4-8
MC68HC711J6	2.4-8
MC68HC711K4	2.4-8
MC68HC711L6	2.4-8
MC68HC805B6	2.4-12
MC68HC811E2	2.4-7
MC68000	2.2-4
MC68008	2.2-4
MC6801	2.4-8
MC6801U4	2.4-8
MC68010	2.2-4
MC68020	2.2-3
MC6803	2.4-8
MC6803U4	2.4-8
MC68030	2.2-3
MC6804J1	2.4-11, 2.4-46
MC6804J2	2.4-11, 2.4-46
MC6804P2	2.4-11, 2.4-46
MC68040	2.2-2
MC6805P2	2.4-11, 2.4-46
MC6805P6	2.4-11, 2.4-46
MC6805R2	2.4-11, 2.4-46
MC6805R3	2.4-11, 2.4-46
MC6805R6	2.4-11, 2.4-46
MC6805S2	2.4-11, 2.4-46
MC6805S3	2.4-11, 2.4-68
MC6805U2	2.4-11, 2.4-68
MC6805U3	2.4-11, 2.4-68
MC68184	2.2-6
MC68185	2.2-6
MC68194	2.2-6, 3.1-19, 3.1-52
MC68195	2.2-6
MC68230	2.2-7
MC68302	2.2-4
MC68330	2.4-2
MC68331	2.4-2
MC68332	2.4-2
MC68340	2.2-4
MC68440	2.2-5
MC68450	2.2-5
MC68605	2.2-6
MC68606	2.2-6
MC68661	2.2-7
MC68681	2.2-7
MC68701	2.4-8, 2.7-3
MC68701U4	2.4-8
MC68705R3	2.4-12
MC6880A	4.6-4
MC68824	2.2-5
MC68836	2.2-7
MC68837	2.2-7
MC68838	2.2-8
MC68839	2.2-8
MC68851	2.2-5
MC6887	4.6-4
MC6888	4.6-4
MC68881	2.2-5
MC68882	2.2-5
MC68901	2.2-7
MC74ACT00	3.1-48
MC74ACT02	3.1-48
MC74ACT04	3.1-48
MC74ACT05	3.1-48
MC74ACT08	3.1-48
MC74ACT10	3.1-48
MC74ACT11	3.1-48
MC74ACT125	3.1-48
MC74ACT126	3.1-48
MC74ACT132	3.1-48
MC74ACT138	3.1-48
MC74ACT139	3.1-48
MC74ACT14	3.1-48
MC74ACT151	3.1-48
MC74ACT153	3.1-48
MC74ACT157	3.1-48
MC74ACT160	3.1-48
MC74ACT161	3.1-48
MC74ACT162	3.1-48
MC74ACT163	3.1-48
MC74ACT174	3.1-48
MC74ACT194	3.1-48
MC74ACT20	3.1-48
MC74ACT240	3.1-48
MC74ACT241	3.1-48
MC74ACT244	3.1-48
MC74ACT245	3.1-48
MC74ACT251	3.1-48
MC74ACT253	3.1-48
MC74ACT256	3.1-48
MC74ACT258	3.1-48
MC74ACT259	3.1-48
MC74ACT273	3.1-49
MC74ACT299	3.1-49
MC74ACT32	3.1-48
MC74ACT323	3.1-49
MC74ACT350	3.1-49
MC74ACT352	3.1-49
MC74ACT353	3.1-49
MC74ACT373	3.1-49
MC74ACT374	3.1-49
MC74ACT377	3.1-49
MC74ACT378	3.1-49
MC74ACT521	3.1-49
MC74ACT533	3.1-49
MC74ACT534	3.1-49
MC74ACT540	3.1-49
MC74ACT541	3.1-49
MC74ACT563	3.1-49
MC74ACT564	3.1-49
MC74ACT573	3.1-49
MC74ACT574	3.1-49
MC74ACT620	3.1-49
MC74ACT623	3.1-49
MC74ACT640	3.1-49
MC74ACT643	3.1-49
MC74ACT646	3.1-49
MC74ACT648	3.1-49
MC74ACT652	3.1-49
MC74ACT74	3.1-48
MC74ACT810	3.1-49
MC74ACT86	3.1-48
MC74AC00	3.1-46
MC74AC02	3.1-46
MC74AC04	3.1-46
MC74AC05	3.1-46
MC74AC08	3.1-46
MC74AC10	3.1-46
MC74AC109	3.1-46
MC74AC11	3.1-46
MC74AC125	3.1-46
MC74AC126	3.1-46
MC74AC132	3.1-46
MC74AC138	3.1-46
MC74AC139	3.1-46
MC74AC14	3.1-46
MC74AC151	3.1-46
MC74AC153	3.1-46
MC74AC157	3.1-46
MC74AC158	3.1-46
MC74AC160	3.1-46
MC74AC161	3.1-46
MC74AC162	3.1-46
MC74AC163	3.1-46
MC74AC174	3.1-46
MC74AC190	3.1-46
MC74AC194	3.1-46
MC74AC20	3.1-46
MC74AC240	3.1-46
MC74AC241	3.1-46
MC74AC244	3.1-46
MC74AC245	3.1-46
MC74AC251	3.1-46
MC74AC253	3.1-46
MC74AC256	3.1-47
MC74AC257	3.1-47
MC74AC258	3.1-47
MC74AC259	3.1-47
MC74AC273	3.1-47
MC74AC299	3.1-47
MC74AC32	3.1-46
MC74AC323	3.1-47
MC74AC350	3.1-47
MC74AC352	3.1-47
MC74AC353	3.1-47
MC74AC373	3.1-47
MC74AC374	3.1-47
MC74AC377	3.1-47
MC74AC378	3.1-47
MC74AC4020	3.1-47
MC74AC4040	3.1-47
MC74AC533	3.1-47
MC74AC534	3.1-47
MC74AC540	3.1-47
MC74AC541	3.1-47
MC74AC563	3.1-47
MC74AC564	3.1-47
MC74AC573	3.1-47
MC74AC574	3.1-47
MC74AC620	3.1-47
MC74AC623	3.1-47
MC74AC640	3.1-47
MC74AC643	3.1-47
MC74AC646	3.1-47
MC74AC648	3.1-47
MC74AC652	3.1-47
MC74AC74	3.1-46
MC74AC810	3.1-47
MC74AC86	3.1-46
MC74F112	3.1-26
MC74F1245	3.1-28
MC74F157A	3.1-26
MC74F158A	3.1-26
MC74F160A	3.1-26
MC74F161A	3.1-26
MC74F162A	3.1-26
MC74F163A	3.1-26
MC74F1803	3.1-16, 3.1-28, 3.1-50
MC74F194	3.1-27
MC74F195	3.1-27
MC74F257A	3.1-27
MC74F258A	3.1-27
MC74F29368	3.1-19, 3.1-53
MC74F2960	3.1-19, 3.1-53
MC74F2960A	3.1-19, 3.1-53

DEVICE	PAGE
MC74F2961A	3.1-19
	3.1-53
MC74F2962A	3.1-19
	3.1-53
MC74F2968A	3.1-19
	3.1-53
MC74F2969	3.1-19
	3.1-53
MC74F2970	3.1-19
	3.1-53
MC74F299	3.1-27
MC74F323	3.1-27
MC74F377	3.1-28
MC74F38	3.1-26
MC74F3893A	3.1-28
MC74F40	3.1-26
MC74F51	3.1-26
MC74F543	3.1-28
MC74F544	3.1-28
MC74F620	3.1-28
MC74F623	3.1-28
MC74F803	3.1-16
	3.1-50
MC75S110	4.6-5
	4.6-6
MC75107	4.6-5
	4.6-6
MC75108	4.6-5
	4.6-6
MC75172B	4.6-5
	4.6-6
MC75174B	4.6-5
	4.6-6
MC75176B	4.6-6
MC78L05AC	4.2-2
MC78L05ACD	4.11-3
MC78L05C	4.2-2
MC78L08AC	4.2-3
MC78L08ACD	4.11-3
MC78L08C	4.2-3
MC78L12AC	4.2-3
MC78L12ACD	4.11-3
MC78L12C	4.2-3
MC78L15AC	4.2-3
MC78L15ACD	4.11-3
MC78L15C	4.2-3
MC78L18AC	4.2-3
MC78L18C	4.2-3
MC78L24AC	4.2-4
MC78L24C	4.2-4
MC78M05C	4.2-2
MC78M05CDT	4.11-3
MC78M06C	4.2-3
MC78M08C	4.2-3
MC78M08CDT	4.11-3
MC78M12C	4.2-3
MC78M12CDT	4.11-3
MC78M15C	4.2-3
MC78M15CDT	4.11-3
MC78M18C	4.2-3
MC78M20C	4.2-4
MC78M24C	4.2-4
MC78T05AC	4.2-2
MC78T05C	4.2-2
MC78T08C	4.2-3
MC78T12AC	4.2-3
MC78T12C	4.2-3
MC78T15AC	4.2-3
MC78T15C	4.2-3
MC7805AC	4.2-2
MC7805B	4.2-2
MC7805C	4.2-2
MC7806AC	4.2-3
MC7806B	4.2-3
MC7806C	4.2-3
MC7808AC	4.2-3
MC7808B	4.2-3
MC7808C	4.2-3
MC7809C	4.2-3
MC7812AC	4.2-3
MC7812B	4.2-3
MC7812C	4.2-3
MC7815AC	4.2-3
MC7815B	4.2-3
MC7815C	4.2-3
MC7818AC	4.2-3
MC7818B	4.2-3
MC7818C	4.2-3
MC7824AC	4.2-4
MC7824B	4.2-4
MC7824C	4.2-4
MC79L05AC, AB	4.2-2
MC79L05ACD	4.11-3
MC79L05C	4.2-2
MC79L12AC, AB	4.2-3
MC79L12ACD	4.11-3
MC79L12C	4.2-3
MC79L15AC, AB	4.2-3
MC79L15ACD	4.11-3
MC79L15C	4.2-3
MC79L18AC	4.2-3
MC79L18C	4.2-3
MC79L24AC	4.2-4
MC79L24C	4.2-4
MC79M05C	4.2-2
MC79M05CDT	4.11-3
MC79M12C	4.2-3
MC79M12CDT	4.11-3
MC79M15C	4.2-3
MC79M15CDT	4.11-3
MC7905.2C	4.2-2
MC7905AC	4.2-2
MC7905C	4.2-2
MC7906C	4.2-3
MC7908C	4.2-3
MC7912C	4.2-3
MC7915C	4.2-3
MC7918C	4.2-3
MC7924C	4.2-4
MC8T26A	4.6-4
MC8T97/	4.6-4
MC8T97/MC6887	4.6-4
MC8T98/	4.6-4
MC8T98/MC6888	4.6-4
MC830	3.1-54
MC832	3.1-54
MC833	3.1-54
MC835	3.1-54
MC836	3.1-54
MC837	3.1-54
MC838	3.1-54
MC840	3.1-54
MC841	3.1-54
MC844	3.1-54
MC845	3.1-54
MC846	3.1-54
MC848	3.1-54
MC849	3.1-54
MC88100	2.3-2
MC88110	2.3-2
MC88200	2.3-3
MC88204	2.3-3
MC88410	2.3-3
MC88913	3.1-16
	3.1-50
MC88914	3.1-16
	3.1-50
MC8891555	3.1-16
	3.1-50
MC8891570	3.1-16
	3.1-50
MC936	3.1-54
MC937	3.1-54
MC938	3.1-54
MC940	3.1-54
MC944	3.1-54
MC945	3.1-54
MC946	3.1-54
MC948	3.1-54
MC949	3.1-54
MC951	3.1-54
MC952	3.1-54
MC953	3.1-54
MC955	3.1-54
MDA08	1.1-12
MDA12	1.1-12
MDA15	1.1-12
MDA20	1.1-12
MD2219AFHXV	6.3-17
MD2369AFHXV	6.3-17
MD2369AHX	6.3-17
MD2369AHXV	6.3-17
MD2905AFHXV	6.3-17
MD3251AFHXV	6.3-17
MD3251AHX	6.3-17
MD3251AHXV	6.3-17
MD3468FHXV	6.3-17
MD3468HX	6.3-17
MD3468HXV	6.3-17
MD6002FHXV	6.3-17
MD6002HX	6.3-17
MD6002HXV	6.3-17
MD918FHXV	6.3-17
MD918HX	6.3-17
MD918HXV	6.3-17
MFF124	5.8-38
MFF124B	5.8-38
MFF224	5.8-38
MFF224B	5.8-38
MFF324	5.8-38
MFF324B	5.8-38
MFF7124	5.8-38
MFF7124B	5.8-38
MFODC1100WP	5.6-15
MFOD1100	5.6-13
MFOD1100	5.6-14
MFOD2404	5.6-13
	5.6-14
MFOD2405	5.6-13
	5.6-14
MFOD71	5.6-13
MFOD73	5.6-13
MFOD75	5.6-13
MFOEC1220WP	5.6-15
MFOE1100	5.6-12
	5.6-14
MFOE1101	5.6-12
	5.6-14
MFOE1102	5.6-12
MFOE1200	5.6-12
	5.6-14
MFOE1201	5.6-12
	5.6-14
MFOE1202	5.6-12
	5.6-14
MFOE1203	5.6-12
	5.6-14
MFOE1300	5.6-12
	5.6-14
MFOE1400	5.6-12
	5.6-14
MFOE200	5.6-12
	5.6-14
MFOE71	5.6-12
MFOE76	5.6-12
MFOR1102	5.6-14
MG100AU50	5.3-40
	5.3-40
MG100BZ100	5.3-40
	5.3-40
MG100BZ120	5.3-40
MG100BZ50	5.3-40
MG100BZ60	5.3-40
MG100BZ60AL	5.3-40
MG15BZ100	5.3-40
MG15F2R100	5.3-40
MG150BZ100	5.3-40
MG150BZ120	5.3-40
MG150BZ120L	5.3-40
MG150BZ50	5.3-40
MG150BZ60	5.3-40
MG200A2U100	5.3-40
MG200A2U120	5.3-40
MG200BZ50	5.3-40
MG200BZ50	5.3-40
MG200BZ60	5.3-40
MG25AU100	5.3-40
MG25BZ100	5.3-40
MG25BZ120A90	5.3-40
MG25BZ50	5.3-40
MG300A2U100	5.3-40
MG300A2U120	5.3-40
MG300A2U120L	5.3-40
MG400A2U120	5.3-40
MG400A2U120L	5.3-40
MG400A2U120LR	5.3-40
MG400A2U60	5.3-40
MG400A2U60L	5.3-40

DEVICE	PAGE
MG400A2U60L	5.3-40
MG50AU100	5.3-40
MG50AU50	5.3-40
MG50BZ100	5.3-40
MG50BZ120A	5.3-40
MG50BZ50	5.3-40
MG50BZ60	5.3-40
MG50BZ60AL	5.3-40
MG75BZ100	5.3-40
MG75BZ120	5.3-40
MG75BZ50	5.3-40
MG75BZ60	5.3-40
MG8F2R100	5.3-40
MHM12N50HX	6.3-14
MHM12N50HXV	6.3-14
MHM25N20HX	6.3-14
MHM25N20HXV	6.3-14
MHM5N100HX	6.3-14
MHM5N100HXV	6.3-14
MHM8N20HX	6.3-14
MHM8N20HXV	6.3-14
MHM8P20HX	6.3-14
MHM8P20HXV	6.3-14
MHQ2369HX	6.3-17
MHQ2369HXV	6.3-17
MHQ2484HX	6.3-17
MHQ2484HXV	6.3-17
MHQ3251AHX	6.3-18
MHQ3251AHXV	6.3-18
MHQ3468HX	6.3-18
MHQ3468HXV	6.3-18
MHQ6002HX	6.3-18
MHQ6002HXV	6.3-18
MHQ918HX	6.3-17
MHQ918HXV	6.3-17
MHW11005	5.8-42
MHW1134	5.8-37
MHW1184	5.8-37
MHW1224	5.8-37
MHW1244	5.8-37
MHW1503	5.8-31
MHW5122A	5.8-36
MHW5141A	5.8-36
MHW5142A	5.8-36
MHW5171A	5.8-36
MHW5172A	5.8-36
MHW5181A	5.8-36
MHW5182A	5.8-36
MHW5183	5.8-36
MHW5185	5.8-38
MHW5205	5.8-38
MHW5222A	5.8-36
MHW5225	5.8-38
MHW5272A	5.8-36
MHW5342A	5.8-36
MHW5382A	5.8-36
MHW590	5.8-39
MHW591	5.8-39
MHW592	5.8-39
MHW593	5.8-39
MHW595	5.8-39
MHW596	5.8-39
MHW607-1	5.8-31
MHW607-2	5.8-31
MHW607-3	5.8-31
MHW607-4	5.8-31
MHW6122	.8-37
MHW6141	.8-37
MHW6142	.8-37
MHW6171	.8-37
MHW6172	.8-37
MHW6181	.8-37
MHW6182	.8-37
MHW6183	.8-37
MHW6185	.8-38
MHW6222	.8-37
MHW6272	.8-37
MHW6342	.8-37
MHW703	5.8-31
MHW707-1	5.8-31
MHW707-2	5.8-31
MHW709-1	5.8-31
MHW709-2	5.8-31
MHW709-3	5.8-31
MHW710-1	5.8-31
MHW710-2	5.8-31
MHW710-3	5.8-31
MHW720-1	5.8-31
MHW720-2	5.8-31
MHW720A1	5.8-31
MHW720A2	5.8-31
MHW720A3	5.8-31
MHW801-1	5.8-31
MHW801-2	5.8-31
MHW801-3	5.8-31
MHW801-4	5.8-31
MHW803-1	5.8-31
MHW803-2	5.8-31
MHW803-3	5.8-31
MHW804-1	5.8-31
MHW804-2	5.8-31
MHW806A1	5.8-31
MHW806A2	5.8-31
MHW806A3	5.8-31
MHW806A4	5.8-31
MHW807-1	5.8-32
MHW807-2	5.8-32
MHW812A3	5.8-32
MHW820-1	5.8-32
MHW820-2	5.8-32
MHW820-3	5.8-32
MHW851-1	5.8-31
MHW851-2	5.8-31
MHW851-3	5.8-31
MHW851-4	5.8-31
MHW9001-1	5.8-32
MHW9001-2	5.8-32
MHW9001-3	5.8-32
MHW9001-4	5.8-32
MHW9002-1	5.8-32
MHW9002-2	5.8-32
MHW9002-3	5.8-32
MHW9002-4	5.8-32
MHW903	5.8-32
MHW909	5.8-32
MHW912	5.8-32
MHW914	5.8-32
MHW915	5.8-32
MHW921	5.8-32
MHW926	5.8-32
MHW927	5.8-32
MHW932	5.8-32
MHW947A1	5.8-32
MHW947A2	5.8-32
MHW947A3	5.8-32
MHW947B1	5.8-32
MHW947B2	5.8-32
MHW947B3	5.8-32
MHW953	5.8-32
MHW954	5.8-32
MJD112	5.3-25
MJD117	5.3-25
MJD122	5.3-25
MJD127	5.3-25
MJD13003	5.3-25
MJD148	5.3-25
MJD200	5.3-25
MJD210	5.3-25
MJD243	5.3-25
MJD253	5.3-25
MJD2955	5.3-25
MJD3055	5.3-25
MJD31	5.3-25
MJD31C	5.3-25
MJD32	5.3-25
MJD32C	5.3-25
MJD340	5.3-25
MJD350	5.3-25
MJD41C	5.3-25
MJD42C	5.3-25
MJD44E3	5.3-25
MJD44H11	5.3-25
MJD45H11	5.3-25
MJD47	5.3-25
MJD50	5.3-25
MJD5731	5.3-25
MJD6036	5.3-25
MJD6039	5.3-25
MJE13002	5.3-23
MJE13003	5.3-23
MJE15030	5.3-34
MJE15031	5.3-34
MJE16204	5.3-36
MJE16205	5.3-36
MJE171	5.3-23
MJE172	5.3-23
MJE181	5.3-23
MJE182	5.3-23
MJE200	5.3-24
MJE210	5.3-24
MJE240	5.3-24
MJE241	5.3-24
MJE243	5.3-24
MJE250	5.3-24
MJE251	5.3-24
MJE253	5.3-24
MJE270	5.3-23
MJE271	5.3-23
MJE340	5.3-23
MJE341	5.3-23
MJE3439	5.3-23
MJE344	5.3-23
MJE350	5.3-23
MJE371	5.3-24
MJE4342	5.3-21
MJE4343	5.3-21
MJE4352	5.3-21
MJE4353	5.3-21
MJE521	5.3-24
MJE700	5.3-24
MJE702	5.3-24
MJE703	5.3-24
MJE800	5.3-24
MJE802	5.3-24
MJE803	5.3-24
MJF16204	5.3-36
MJF16205	5.3-36
MJF16206	5.3-36
MJF16210	5.3-36
MJF16212	5.3-36
MJF16214	5.3-36
MJF16216	5.3-36
MJF16218	5.3-36
MJH10012	5.3-21
MJH11017	5.3-21
MJH11018	5.3-21
MJH11019	5.3-21
MJH11020	5.3-21
MJH11021	5.3-21
MJH11022	5.3-21
MJH12005	5.3-21
MJH16006	5.3-21
MJH16006A	5.3-21
MJH16008	5.3-21
MJH16206	5.3-36
MJH6282	5.3-21
MJH6283	5.3-21
MJH6284	5.3-21
MJH6285	5.3-21
MJH6286	5.3-21
MJH6287	5.3-21
MJW16010	5.3-22
MJW16010A	5.3-22
MJW16012	5.3-22
MJW16018	5.3-22
MJW16110	5.3-22
MJW16206	5.3-22
MJW16210	5.3-22
	5.3-36
MJW16212	5.3-22
	5.3-36
MJW16218	5.3-36
MJW18020	5.3-22
MJW6678	5.3-22
MJ100AA45	5.3-39
MJ100AA45	5.3-39
MJ100BD45	5.3-39
MJ100BD45	5.3-39
MJ100BE55	5.3-39
MJ100BE55	5.3-39
MJ100BX100	5.3-39
MJ100BX120	5.3-39
MJ100B3D45	5.3-39

DEVICE	PAGE
MJ1000	5.3-27
MJ10000	5.3-29
MJ10001	5.3-30
MJ10004	5.3-29
MJ10005	5.3-30
MJ10006	5.3-28
MJ10007	5.3-28
MJ10008	5.3-30
MJ10009	5.3-30
MJ1001	5.3-27
MJ10012	5.3-28
MJ10014	5.3-28
MJ10015	5.3-31
MJ10016	5.3-31
MJ10016HX	6.3-14
MJ10016HXV	6.3-14
MJ10020	5.3-31
MJ10021	5.3-31
MJ10022	5.3-31
MJ10023	5.3-31
MJ10024	5.3-30
MJ10025	5.3-30
MJ11011	5.3-30
MJ11012	5.3-30
MJ11013	5.3-30
MJ11014	5.3-30
MJ11015	5.3-30
MJ11016	5.3-30
MJ11017	5.3-28
MJ11018	5.3-28
MJ11019	5.3-28
MJ11020	5.3-28
MJ11021	5.3-28
MJ11021HX	6.3-14
MJ11021HXV	6.3-14
MJ11022	5.3-28
MJ11022HX	6.3-14
MJ11022HXV	6.3-14
MJ11028	5.3-31
MJ11029	5.3-31
MJ11030	5.3-31
MJ11031	5.3-31
MJ11032	5.3-31
MJ11032HX	6.3-14
MJ11032HXV	6.3-14
MJ11033	5.3-31
MJ11033HX	6.3-14
MJ11033HXV	6.3-14
MJ12004	5.3-27
	5.3-36
MJ12005	5.3-27
MJ12005HX	6.3-14
MJ12005HXV	6.3-14
MJ13014	5.3-28
MJ13015	5.3-28
MJ13333	5.3-30
MJ13335	5.3-30
MJ14000	5.3-31
MJ14001	5.3-31
MJ14002	5.3-31
MJ14003	5.3-31
MJ15FG45	5.3-39
MJ15FL110	5.3-39
MJ150BE55	5.3-39
MJ150BK100	5.3-39
MJ150BX120A	5.3-39
MJ150B3D55	5.3-39
MJ15001	5.3-28
	5.3-34
MJ15002	5.3-28
	5.3-34
MJ15003	5.3-29
	5.3-34
MJ15004	5.3-29
	5.3-34
MJ15011	5.3-28
MJ15012	5.3-28
MJ15015	5.3-28
	5.3-34
MJ15016	5.3-28
	5.3-34
MJ15018	5.3-26
MJ15019	5.3-26
MJ15020	5.3-26
	5.3-34
MJ15021	5.3-26
	5.3-34
MJ15022	5.3-29
MJ15023	5.3-29
MJ15024	5.3-29
	5.3-34
MJ15025	5.3-29
	5.3-34
MJ16002A	5.3-26
MJ16006	5.3-27
MJ16006A	5.3-27
MJ16008	5.3-27
MJ16010	5.3-29
MJ16010A	5.3-29
MJ16012	5.3-29
MJ16014	5.3-30
MJ16016	5.3-30
MJ16018	5.3-28
MJ16020	5.3-30
MJ16022	5.3-30
MJ16110	5.3-29
MJ20FG45	5.3-39
MJ20FG45	5.3-39
MJ200AA55	5.3-39
MJ200AF55	5.3-39
MJ200AV100	5.3-39
MJ200AV120	5.3-39
MJ25BX100A	5.3-39
MJ25FL110	5.3-39
MJ2500	5.3-27
MJ2501	5.3-27
MJ2955	5.3-28
MJ2955A	5.3-28
MJ30FG45	5.3-39
MJ300AV100	5.3-39
MJ300AV120	5.3-39
MJ300A2F55	5.3-39
MJ3000	5.3-27
MJ3001	5.3-27
MJ3041	5.3-28
MJ40BX140	5.3-39
MJ400A2F55	5.3-39
MJ410	5.3-28
MJ413	5.3-28
MJ423	5.3-28
MJ4502	5.3-30
MJ4646	5.3-33
MJ4647	5.3-33
MJ50AB45	5.3-39
MJ50AC100	5.3-39
MJ50BX100	5.3-39
MJ50BX100A	5.3-39
MJ50BX120	5.3-39
MJ50B2D45	5.3-39
MJ50FG45	5.3-39
MJ50FG45B	5.3-39
MJ6308	5.3-27
MJ6316HX	6.3-14
MJ6316HXV	6.3-14
MJ6318HX	6.3-14
MJ6318HXV	6.3-14
MJ6503	5.3-27
MJ75BD45	5.3-39
MJ75BX100	5.3-39
MJ75BX120	5.3-39
MJ75B2D50	5.3-39
MJ75FG45	5.3-39
MJ80BX140	5.3-39
MJ802	5.3-30
MJ8502	5.3-26
MJ8503	5.3-27
MJ8505	5.3-28
MJ900	5.3-27
MJ901	5.3-27
MKP9V120	5.5-25
MKP9V130	5.5-25
MKP9V240	5.5-25
MKP9V260	5.5-25
MKP9V270	5.5-25
MK1V115	5.5-25
MK1V125	5.5-25
MK1V135	5.5-25
MK1V240	5.5-25
MK1V260	5.5-25
MK1V270	5.5-25
MLEDC1000WP	5.6-15
MLED71	5.6-10
MLED76	5.6-10
MLED77	5.6-10
MLED81	5.6-10
MLED930	5.6-10
MLL4678	5.2-7
MLL4679	5.2-7
MLL4680	5.2-7
MLL4681	5.2-7
MLL4682	5.2-7
MLL4683	5.2-7
MLL4684	5.2-7
MLL4685	5.2-7
MLL4686	5.2-7
MLL4687	5.2-7
MLL4688	5.2-7
MLL4689	5.2-7
MLL4690	5.2-7
MLL4691	5.2-7
MLL4692	5.2-7
MLL4693	5.2-7
MLL4694	5.2-7
MLL4695	5.2-7
MLL4696	5.2-7
MLL4697	5.2-7
MLL4698	5.2-7
MLL4699	5.2-7
MLL4700	5.2-7
MLL4701	5.2-7
MLL4702	5.2-7
MLL4703	5.2-7
MLL4704	5.2-7
MLL4705	5.2-7
MLL4706	5.2-7
MLL4707	5.2-7
MLL4708	5.2-7
MLL4709	5.2-7
MLL4710	5.2-7
MLL4711	5.2-7
MLL4712	5.2-7
MLL4713	5.2-7
MLL4714	5.2-7
MLL4715	5.2-7
MLL4716	5.2-7
MLL4717	5.2-7
MLL5221B	5.2-7
MLL5222B	5.2-7
MLL5223B	5.2-7
MLL5224B	5.2-7
MLL5225B	5.2-7
MLL5226B	5.2-7
MLL5227B	5.2-7
MLL5228B	5.2-7
MLL5229B	5.2-7
MLL5230B	5.2-7
MLL5231B	5.2-7
MLL5232B	5.2-7
MLL5233B	5.2-7
MLL5234B	5.2-7
MLL5235B	5.2-7
MLL5236B	5.2-7
MLL5237B	5.2-7
MLL5238B	5.2-7
MLL5239B	5.2-7
MLL5240B	5.2-7
MLL5241B	5.2-7
MLL5242B	5.2-7
MLL5243B	5.2-7
MLL5244B	5.2-7
MLL5245B	5.2-7
MLL5246B	5.2-7
MLL5247B	5.2-7
MLL5248B	5.2-7
MLL5249B	5.2-7
MLL5250B	5.2-7
MLL5251B	5.2-7
MLL5252B	5.2-7
MLL5253B	5.2-7
MLL5254B	5.2-7
MLL5255B	5.2-7
MLL5256B	5.2-7
MLL5257B	5.2-7
MLL5258B	5.2-7
MLL5259B	5.2-7
MLL5260B	5.2-7
MLL5261B	5.2-8

DEVICE	PAGE
MLL5262B	5.2-8
MLL5263B	5.2-8
MMBR4957L	5.8-21
MMBR4957L	5.8-26
MMBR5031L	5.8-21
MMBR5031L	5.8-26
MMBR5179L	5.8-21
MMBR5179L	5.8-26
MMBR536L	5.8-21
MMBR571L	5.8-21
MMBR901L	5.8-21
MMBR911L	5.8-21
MMBR920L	5.8-21
MMBR920L	5.8-26
MMBR931L	5.8-21
MMBR941L	5.8-21
MMBR951L	5.8-21
MMBZ15VDLT1	5.2-18
MMBZ5221BL	5.2-7
MMBZ5222BL	5.2-7
MMBZ5223BL	5.2-7
MMBZ5224BL	5.2-7
MMBZ5225BL	5.2-7
MMBZ5226BL	5.2-7
MMBZ5227BL	5.2-7
MMBZ5228BL	5.2-7
MMBZ5229BL	5.2-7
MMBZ5230BL	5.2-7
MMBZ5231BL	5.2-7
MMBZ5232BL	5.2-7
MMBZ5233BL	5.2-7
MMBZ5234BL	5.2-7
MMBZ5235BL	5.2-7
MMBZ5236BL	5.2-7
MMBZ5237BL	5.2-7
MMBZ5238BL	5.2-7
MMBZ5239BL	5.2-7
MMBZ5240BL	5.2-7
MMBZ5241BL	5.2-7
MMBZ5242BL	5.2-7
MMBZ5243BL	5.2-7
MMBZ5244BL	5.2-7
MMBZ5245BL	5.2-7
MMBZ5246BL	5.2-7
MMBZ5247BL	5.2-7
MMBZ5248BL	5.2-7
MMBZ5249BL	5.2-7
MMBZ5250BL	5.2-7
MMBZ5251BL	5.2-7
MMBZ5252BL	5.2-7
MMBZ5253BL	5.2-7
MMBZ5254BL	5.2-7
MMBZ5255BL	5.2-7
MMBZ5256BL	5.2-7
MMBZ5257BL	5.2-7
MMBZ5258BL	5.2-7
MMBZ5259BL	5.2-7
MMBZ5260BL	5.2-7
MMBZ5261BL	5.2-8
MMBZ5262BL	5.2-8
MMBZ5263BL	5.2-8
MMBZ5264BL	5.2-8
MMBZ5265BL	5.2-8
MMBZ5266BL	5.2-8
MMBZ5267BL	5.2-8
MMBZ5268BL	5.2-8
MMBZ5269BL	5.2-8
MMBZ5270BL	5.2-8
MMC4049	5.8-45
MM4049	5.8-24
MM4049	5.8-28
MM4049	5.8-28
MM4049	5.8-45
MM8009	5.8-28
MOC119	5.6-4
MOC119S,F	5.6-8
MOC205R1/R2	5.6-6
MOC206R1/R2	5.6-6
MOC207R1/R2	5.6-6
MOC211R1/R2	5.6-6
MOC212R1/R2	5.6-6
MOC213R1/R2	5.6-6
MOC215R1/R2	5.6-6
MOC216R1/R2	5.6-6
MOC217R1/R2	5.6-6
MOC221R1/R2	5.6-6
MOC222R1/R2	5.6-6
MOC223R1/R2	5.6-6
MOC3009	5.5-24
MOC3009	5.6-5
MOC3009S,F	5.6-9
MOC3010	5.5-24
MOC3010	5.6-5
MOC3010S,F	5.6-9
MOC3011	5.5-24
MOC3011	5.6-5
MOC3011S,F	5.6-9
MOC3012	5.6-5
MOC3012S,F	5.6-9
MOC3020	5.5-24
	5.6-5
MOC3020S,F	5.6-9
MOC3021	5.5-24
	5.6-5
MOC3021S,F	5.6-9
MOC3022	5.6-5
MOC3022S,F	5.6-9
MOC3023	5.6-5
MOC3023S,F	5.6-9
MOC3030	5.5-24
MOC3031	5.5-24
	5.6-5
MOC3031S,F	5.6-9
MOC3032	5.6-5
MOC3032S,F	5.6-9
MOC3033	5.6-5
MOC3033S,F	5.6-9
MOC3040	5.5-24
MOC3041	5.6-5
MOC3041S,F	5.6-9
MOC3043	5.6-5
MOC3043S,F	5.6-9
MOC3060	5.5-24
MOC3061	5.5-24
	5.6-5
MOC3061S,F	5.6-9
MOC3062	5.6-5
MOC3062S,F	5.6-9
MOC3063	5.6-5
MOC3063S,F	5.6-9
MOC3081	5.6-5
MOC3081S,F	5.6-9
MOC3082	5.6-5
MOC3082S,F	5.6-9
MOC3083	5.6-5
MOC3083S,F	5.6-9
MOC4042	5.6-5
MOC4042S,F	5.6-9
MOC5007	5.6-5
MOC5007S,F	5.6-9
MOC5008	5.6-5
MOC5008S,F	5.6-9
MOC5009	5.6-5
MOC5009S,F	5.6-9
MOC6005	5.6-5
MOC6005S,F	5.6-9
MOC6010	5.6-5
MOC6010S,F	5.6-9
MOC70H1	5.6-11
MOC70H2	5.6-11
MOC70P1	5.6-11
MOC70P2	5.6-11
MOC70V1	5.6-11
MOC75T1	5.6-11
MOC8020	5.6-4
MOC8020S,F	5.6-8
MOC8021	5.6-4
MOC8021S,F	5.6-8
MOC8050	5.6-4
MOC8050S,F	5.6-8
MOC8080	5.6-4
MOC8080S,F	5.6-8
MOC8100	5.6-3
MOC8100S,F	5.6-7
MOC8101	5.6-3
MOC8101S,F	5.6-7
MOC8102	5.6-3
MOC8102S,F	5.6-7
MOC8103	5.6-3
MOC8103S,F	5.6-7
MOC8104	5.6-3
MOC8104S,F	5.6-7
MOC8111	5.6-3
MOC8111S,F	5.6-7
MOC8112	5.6-3
MOC8112S,F	5.6-7
MOC8113	5.6-3
MOC8113S,F	5.6-7
MOC8204	5.6-4
MOC8204S,F	5.6-9
MPM6702	5.3-39
MPM6702	5.3-39
MPSU01	5.3-26
MPSU01A	5.3-26
MPSU02	5.3-26
MPSU03	5.3-26
MPSU04	5.3-26
MPSU05	5.3-26
MPSU06	5.3-26
MPSU07	5.3-26
MPSU10	5.3-26
MPSU45	5.3-26
MPSU51	5.3-26
MPSU51A	5.3-26
MPSU52	5.3-26
MPSU55	5.3-26
MPSU56	5.3-26
MPSU57	5.3-26
MPSU60	5.3-26
MPSU95	5.3-26
MPS200D,A	5.7-7
MPS3866	5.8-20
	5.8-28
MPS536	5.8-20
MPS571	5.8-20
MPS901	5.8-20
MPS911	5.8-20
MPTE-10	5.2-15
MPTE-10C	5.2-15
MPTE-12	5.2-15
MPTE-12C	5.2-15
MPTE-15	5.2-15
MPTE-15C	5.2-15
MPTE-18	5.2-15
MPTE-18C	5.2-15
MPTE-22	5.2-15
MPTE-22C	5.2-15
MPTE-36	5.2-15
MPTE-36C	5.2-15
MPTE-45	5.2-15
MPTE-45C	5.2-15
MPTE-5	5.2-15
MPTE-8	5.2-15
MPTE-8C	5.2-15
MPX10D	5.7-5, 7
MPX10DP	5.7-5
MPX10GP	5.7-5
MPX10GS	5.7-5
MPX10GSX	5.7-5
MPX10GVP	5.7-5
MPX10GVS	5.7-5
MPX10GVSX	5.7-5
MPX100A	5.7-5
MPX100AP	5.7-5
MPX100AS	5.7-5
MPX100ASX	5.7-5
MPX100D	5.7-5
MPX100D,A	5.7-7
MPX100DP	5.7-5
MPX100GP	5.7-5
MPX100GS	5.7-5
MPX100GSX	5.7-5
MPX100GVP	5.7-5
MPX100GVS	5.7-5
MPX100GVSX	5.7-5
MPX11D	5.7-7
MPX12D	5.7-7
MPX200A	5.7-5
MPX200AP	5.7-5
MPX200AS	5.7-5
MPX200ASX	5.7-5
MPX200D	5.7-5
MPX200DP	5.7-5
MPX200GP	5.7-5
MPX200GS	5.7-5
MPX200GSX	5.7-5

DEVICE	PAGE
MPX200GVP	5.7-5
MPX200GVS	5.7-5
MPX200GVSX	5.7-5
MPX201D,A	5.7-7
MPX2010D	5.7-5, 7
MPX2010DP	5.7-5, 8
MPX2010GP	5.7-5
MPX2010GS	5.7-5
MPX2010GSX	5.7-5
MPX2010GVP	5.7-5
MPX2010GVS	5.7-5
MPX2010GVSX	5.7-5
MPX2040D	5.7-5
	5.7-7
MPX2050DP	5.7-5
MPX2050GP	5.7-5
MPX2050GS	5.7-5
MPX2050GSX	5.7-5
MPX2050GVP	5.7-5
MPX2050GVS	5.7-5
MPX2050GVSX	5.7-5
MPX2051D	5.7-7
MPX2100A	5.7-5
MPX2100AP	5.7-5
MPX2100AS	5.7-5
MPX2100ASX	5.7-5
MPX2100D	5.7-5
MPX2100D,A	5.7-7
MPX2100DP	5.7-5
MPX2100GP	5.7-5
MPX2100GS	5.7-5
MPX2100GSX	5.7-5
MPX2100GVP	5.7-5
MPX2100GVS	5.7-5
MPX2100GVSX	5.7-5
MPX2101D,A	5.7-7
MPX2200A	5.7-5
MPX2200AP	5.7-5
MPX2200AS	5.7-5
MPX2200ASX	5.7-5
MPX2200D	5.7-5
MPX2200D,A	5.7-7
MPX2200DP	5.7-5
MPX2200GP	5.7-5
MPX2200GS	5.7-5
MPX2200GSX	5.7-5
MPX2200GVP	5.7-5
MPX2200GVS	5.7-5
MPX2200GVSX	5.7-5
MPX2201D,A	5.7-7
MPX2700AP	5.7-8
MPX2700D,A	5.7-8
MPX2700DP	5.7-8
MPX50D	5.7-5, 7
MPX50DP	5.7-5
MPX50GP	5.7-5
MPX50GS	5.7-5
MPX50GSX	5.7-5
MPX50GVP	5.7-5
MPX50GVS	5.7-5
MPX50GVSX	5.7-5
MPX5050D	5.7-8
MPX5050DP	5.7-8
MPX51D	5.7-7
MPX5100A	5.7-5
MPX5100AP	5.7-5, 8
MPX5100AS	5.7-5
MPX5100ASX	5.7-5
MPX5100D	5.7-5, 8
MPX5100D,A	5.7-7
MPX5100DP	5.7-5, 8
MPX5100GP	5.7-5
MPX5100GS	5.7-5
MPX5100GSX	5.7-5
MPX5100GVP	5.7-5
MPX5100GVS	5.7-5
MPX5100GVSX	5.7-5
MPX52D	5.7-7
MPX700A	5.7-8
MPX700AP	5.7-8
MPX700D	5.7-5, 7
MPX700DP	5.7-5, 8
MPX700GP	5.7-5
MPX700GS	5.7-5
MPX700GSX	5.7-5
MPX700GVP	5.7-5
MPX700GVS	5.7-5
MPX700GVSX	5.7-5
MPX7100AP	5.7-8
MPX7100D	5.7-8
MPX7100D,A	5.7-8
MPX7100DP	5.7-8
MPX7200AP	5.7-8
MPX7200D,A	5.7-8
MPX7200DP	5.7-8
MQ2369AHXV	6.3-17
MQ2484HXV	6.3-17
MQ3251AHXV	6.3-18
MQ3468HXV	6.3-18
MQ6002HXV	6.3-18
MQ918HXV	6.3-17
MRAL1417-11	5.8-15
MRAL1417-2	5.8-15
MRAL1417-25	5.8-15
MRAL1417-6	5.8-15
MRAL1720-2	5.8-15
MRAL1720-20	5.8-15
MRAL1720-5	5.8-15
MRAL1720-9	5.8-15
MRAL2023-1.5	5.8-15
MRAL2023-12	5.8-15
MRAL2023-18	5.8-15
MRAL2023-3	5.8-15
MRAL2023-6	5.8-15
MRAL2327-1.3	5.8-15
MRAL2327-12	5.8-15
MRAL2327-3	5.8-15
MRAL2327-6	5.8-15
MRA0510-50H	5.8-10
MRA0610-18A	5.8-15
MRA0610-3	5.8-15
MRA0610-40A	5.8-15
MRA0610-9	5.8-15
MRA1000-14L	5.8-16
MRA1000-3.5L	5.8-16
MRA1000-7L	5.8-16
MRA1014-12	5.8-15
MRA1014-2	5.8-15
MRA1014-35A	5.8-15
MRA1014-6	5.8-15
MRA1214-55H	5.8-15
MRA1300-10L	5.8-15
MRA1417-11	5.8-15
MRA1417-2	5.8-15
MRA1417-25A	5.8-15
MRA1417-6	5.8-15
MRA1600-13	5.8-16
MRA1600-2	5.8-16
MRA1600-30	5.8-16
MRA1600-50H	5.8-16
MRA1600-6	5.8-16
MRA1720-2	5.8-15
MRA1720-20	5.8-15
MRA1720-5	5.8-15
MRA1720-9	5.8-15
MRBM3045CTHX	6.3-16
MRDC100WP	5.6-15
MRDC200WP	5.6-15
MRDC400WP	5.6-15
MRDC600WP	5.6-16
MRD300	5.6-10
MRD3010	5.6-10
MRD3050	5.6-10
MRD3051	5.6-10
MRD3054	5.6-10
MRD3055	5.6-10
MRD3056	5.6-10
MRD310	5.6-10
MRD360	5.6-10
MRD370	5.6-10
MRD500	5.6-10
MRD5009	5.6-10
MRD510	5.6-10
MRD701	5.6-10
MRD711	5.6-10
MRD721	5.6-10
MRD750	5.6-10
MRD800WP	5.6-16
MRD821	5.6-10
MRFC2369	5.8-45
MRFC544	5.8-45
MRFC545	5.8-45
MRFC559	5.8-45
MRFC901	5.8-45
MRFC904	5.8-45
MRFQ17	5.8-22
	5.8-26
MRFQ19	5.8-22
MRF0211L	5.8-21
MRF1000MA	5.8-12
MRF1000MB	5.8-12
MRF10005	5.8-13
MRF1002MA	5.8-13
MRF1002MB	5.8-13
MRF10031	5.8-13
MRF1004MA	5.8-13
MRF1004MB	5.8-13
MRF10070	5.8-13
MRF10120	5.8-13
MRF1015MA	5.8-13
MRF1015MB	5.8-13
MRF10150	5.8-13
MRF1035MA	5.8-13
MRF1035MB	5.8-13
MRF10350	5.8-13
MRF10500	5.8-13
MRF1090MA	5.8-13
MRF1090MB	5.8-13
MRF1150MA	5.8-13
MRF1150MB	5.8-13
MRF134	5.8-4
MRF136	5.8-4
MRF136Y	5.8-4
MRF137	5.8-4
MRF138	5.8-3
MRF140	5.8-3
MRF141	5.8-4
MRF141G	5.8-4
MRF148	5.8-3
MRF150	5.8-3
MRF151	5.8-4
MRF151G	5.8-4
MRF154	5.8-3
MRF157	5.8-3
MRF158R	5.8-4
MRF161	5.8-4
MRF162	5.8-4
MRF163	5.8-4
MRF164W	5.8-4
MRF166C	5.8-4
MRF171	5.8-4
MRF172	5.8-4
MRF173	5.8-4
MRF173CQ	5.8-4
MRF174	5.8-4
MRF175GU	5.8-4
MRF175GV	5.8-4
MRF175LU	5.8-4
MRF175LV	5.8-4
MRF176GU	5.8-4
MRF176GV	5.8-4
MRF1946	5.8-8
MRF1946A	5.8-8
MRF207	5.8-8
MRF208	5.8-8
MRF212	5.8-7
MRF220	5.8-7
MRF221	5.8-8
MRF224	5.8-8
MRF226	5.8-8
MRF227	5.8-8
MRF229	5.8-7
MRF232	5.8-7
MRF233	5.8-7
MRF234	5.8-7
MRF2369	5.8-20
MRF2369	5.8-45
MRF237	5.8-7
MRF240	5.8-8
MRF240A	5.8-8
MRF247	5.8-8
MRF260	5.8-7
MRF262	5.8-8
MRF2628	5.8-8

DEVICE	PAGE
MRF264	5.8-8
MRF2857HX	6.3-15
MRF2857HXV	6.3-15
MRF313	5.8-9
MRF314	5.8-6
MRF314A	5.8-6
MRF315	5.8-6
MRF315A	5.8-6
MRF316	5.8-6
MRF317	5.8-6
MRF321	5.8-9
MRF323	5.8-9
MRF325	5.8-9
MRF326	5.8-9
MRF327	5.8-9
MRF329	5.8-9
MRF338	5.8-11
MRF340	5.8-6
MRF342	5.8-6
MRF344	5.8-6
MRF3866	5.8-22
MRF3866	5.8-28
MRF390	5.8-9
MRF392	5.8-9
MRF393	5.8-9
MRF401	5.8-5
MRF406	5.8-5
MRF410	5.8-5
MRF421	5.8-5
MRF422	5.8-5
MRF426	5.8-5
MRF427	5.8-5
MRF428	5.8-5
MRF429	5.8-5
MRF430	5.8-5
MRF433	5.8-5
MRF4427	5.8-22
MRF448	5.8-5
MRF450	5.8-5
MRF450A	5.8-5
MRF454	5.8-5
MRF455	5.8-5
MRF455A	5.8-5
MRF464	5.8-5
MRF464A	5.8-5
MRF466	5.8-5
MRF475	5.8-5
MRF475	5.8-5
MRF475	5.8-6
MRF476	5.8-5
MRF476	5.8-5
MRF477	5.8-5
MRF485	5.8-5
MRF486	5.8-5
MRF492	5.8-6
MRF4957HX	6.3-15
MRF4957HXV	6.3-15
MRF497	5.8-6
MRF5109HX	6.3-15
MRF5109HXV	6.3-15
MRF5160	5.8-22
MRF517	5.8-24
	5.8-26
MRF5174	5.8-9
MRF5175	5.8-9
MRF521	5.8-20
	5.8-28
MRF5211L	5.8-21
MRF522	5.8-23
MRF522HXV	6.3-15
MRF536	5.8-20
MRF544	5.8-24
	5.8-27
	5.8-45
MRF545	5.8-24
	5.8-27
	5.8-45
MRF546	5.8-27
MRF547	5.8-27
MRF548	5.8-22
	5.8-27
MRF553	5.8-7
	5.8-21
MRF555	5.8-10
	5.8-21
MRF557	5.8-11
	5.8-21
MRF5583	5.8-22
	5.8-26
MRF5583HX	6.3-15
MRF5583HXV	6.3-15
MRF559	5.8-11
	5.8-20
	5.8-45
MRF571	5.8-20
	5.8-28
MRF5711L	.8-21
MRF572	5.8-23
MRF580	5.8-21
MRF580A	5.8-21
MRF581	5.8-10
	5.8-11
	5.8-20
	5.8-27
MRF581A	5.8-20
	5.8-27
MRF5812	5.8-22
	5.8-27
MRF586	5.8-24
	5.8-26
MRF587	5.8-22
	5.8-27
MRF5943	5.8-22
	5.8-26
MRF604	5.8-7
MRF607	5.8-7
MRF627	5.8-10
MRF630	5.8-10
MRF641	5.8-10
MRF644	5.8-10
MRF646	5.8-10
MRF648	5.8-10
MRF650	5.8-10
MRF652	5.8-10
MRF652S	5.8-10
MRF653	5.8-10
MRF653S	5.8-10
MRF654	5.8-10
MRF658	5.8-10
MRF660	5.8-10
MRF6603HX	6.3-15
MRF6603HXV	6.3-15
MRF6604HXV	6.3-15
MRF750	5.8-10
MRF752	5.8-10
MRF754	5.8-10
MRF837	5.8-11
MRF837	5.8-20
MRF8372	5.8-11
MRF8372	5.8-22
MRF838A	5.8-11
MRF839	5.8-11
MRF839F	5.8-11
MRF840	5.8-11
MRF841	5.8-11
MRF842	5.8-11
MRF844	5.8-11
MRF846	5.8-11
MRF847	5.8-11
MRF873	5.8-11
MRF873S	5.8-11
MRF880	5.8-12
MRF890	5.8-12
MRF891	5.8-12
MRF892	5.8-12
MRF894	5.8-12
MRF896	5.8-12
MRF897	5.8-12
MRF898	5.8-12
MRF899	5.8-12
MRF901	5.8-20
MRF901	5.8-45
MRF9011L	5.8-21
MRF904	5.8-24
MRF904	5.8-28
MRF904	5.8-45
MRF9331L	5.8-21
MRF941	5.8-20
MRF9411L	5.8-21
MRF942	5.8-23
MRF951	5.8-20
MRF9511L	5.8-21
MRF952	5.8-23
MRF962	5.8-23
	5.8-26
MRW2001	5.8-14
MRW2003	5.8-14
MRW2005	5.8-14
MRW2010	5.8-14
MRW2015	5.8-14
MRW2020	5.8-14
MRW2301	5.8-14
MRW2304	5.8-14
MRW2307	5.8-14
MRW3001	5.8-14
MRW3003	5.8-14
MRW3005	5.8-14
MRW52001	5.8-18
MRW52101	5.8-18
MRW52102	5.8-18
MRW52104	5.8-18
MRW52501	5.8-18
MRW52502	5.8-18
MRW52504	5.8-18
MRW52601	5.8-18
MRW52602	5.8-18
MRW52604	5.8-18
MRW53001	5.8-18
MRW53101	5.8-18
MRW53102	5.8-18
MRW53501	5.8-18
MRW53502	5.8-18
MRW53505	5.8-18
MRW53601	5.8-18
MRW53602	5.8-18
MRW53605	5.8-18
MRW54001	5.8-18
MRW54101	5.8-18
MRW54501	5.8-18
MRW54601	5.8-18
MRW54602	5.8-18
MR10100E	5.3-36
MR10120E	5.3-36
MR10120E	5.4-2
MR10150E	5.3-36
MR10150E	5.4-2
MR1120	5.4-13
MR1121	5.4-13
MR1122	5.4-13
MR1124	5.4-13
MR1126	5.4-13
MR1128	5.4-13
MR1130	5.4-13
MR1366	5.4-11
MR1376	5.4-12
MR1386	5.4-12
MR1396	5.4-12
MR2000	5.4-13
MR2001	5.4-13
MR2002	5.4-13
MR2004	5.4-13
MR2006	5.4-13
MR2008	5.4-13
MR2010	5.4-13
MR2400	5.4-13
MR2400F	5.4-12
MR2401	5.4-13
MR2401F	5.4-12
MR2402	5.4-13
MR2402F	5.4-12
MR2404	5.4-13
MR2404F	5.4-12
MR2406	5.4-13
MR2406F	5.4-12
MR2500	5.4-14
MR2501	5.4-14
MR2502	5.4-14
MR2504	5.4-14
MR2506	5.4-14
MR2508	5.4-14
MR2510	5.4-14
MR2535L	5.4-2
	5.2-23
MR3910HX	6.3-16
MR3910HXV	6.3-16
MR3911HX	6.3-16

DEVICE	PAGE
MR3911HXV	6.3-16
MR3913HX	6.3-16
MR3913HXV	6.3-16
MR4422CT	5.4-14
MR4422CTR	5.4-14
MR5005	5.4-14
MR5010	5.4-14
MR5020	5.4-14
MR5040	5.4-14
MR750	5.4-13
MR751	5.4-13
MR752	5.4-13
MR754	5.4-13
MR756	5.4-13
MR758	5.4-13
MR760	5.4-13
MR820	5.4-11
MR821	5.4-11
MR822	5.4-11
MR824	5.4-11
MR826	5.4-11
MR830	5.4-11
MR831	5.4-11
MR832	5.4-11
MR834	5.4-11
MR836	5.4-11
MR836HX	6.3-16
MR836HXV	6.3-16
MR850	5.4-11
MR851	5.4-11
MR852	5.4-11
MR854	5.4-11
MR856	5.4-11
MTS102	5.7-9
MTS103	5.7-9
MTS105	5.7-9
MT15FR45	5.3-39
MT40BY50	5.3-37
MT40B3Y50	5.3-37
MT50BY40	5.3-37
MT50BY45	5.3-39
MT50BY50	5.3-39
MT50B2Y45	5.3-39
MT50B2Y50	5.3-39
MT50B3Y40	5.3-37
MT8FR45	5.3-39
MT90BY20	5.3-37
MT90B3Y20	5.3-37
MURD305	5.4-8
MURD310	5.4-8
MURD315	5.4-8
MURD320	5.4-8
MURD605CT	5.4-8
MURD610CT	5.4-8
MURD615CT	5.4-8
MURD620CT	5.4-8
MURH840CT	5.4-2, 9
MURH860CT	5.4-2, 9
MURM1620CTHX	6.3-16
MURM1620CTHXV	6.3-16
MURM1640CTHX	6.3-16
MURM1640CTHXV	6.3-16
MURM1660CTHX	6.3-16
MURM1660CTHXV	6.3-16
MURM3020HX	6.3-16
MURM3020HXV	6.3-16
MURM3040HX	6.3-16
MURM3040HXV	6.3-16
MURM3060HX	6.3-16
MURM3060HXV	6.3-16
MURS105T3	5.4-8
MURS110T3	5.4-8
MURS115T3	5.4-8
MURS120T3	5.4-8
MURS130T3	5.4-8
MURS140T3	5.4-8
MURS150T3	5.4-8
MURS160T3	5.4-8
MURS305T3	5.4-8
MURS310T3	5.4-8
MURS315T3	5.4-8
MURS320T3	5.4-8
MURS330T3	5.4-8
MURS340T3	5.4-8
MURS350T3	5.4-8
MURS360T3	5.4-8
MUR05150E	5.3-36
MUR10020CT	5.4-10
MUR10100E	5.3-36
MUR10120E	5.3-36
MUR10120E	5.4-2
MUR10150E	5.3-36
MUR10150E	5.4-2
MUR105	5.4-8
MUR110	5.4-8
MUR1100E	5.4-8
MUR115	5.4-8
MUR120	5.4-8
MUR130	5.4-8
MUR140	5.4-8
MUR150	5.4-8
MUR1505	5.4-9
MUR1510	5.4-9
MUR1515	5.4-9
MUR1520	5.4-9
MUR1530	5.4-9
MUR1540	5.4-9
MUR1550	5.4-9
MUR1560	5.4-9
MUR160	5.4-8
MUR1605CT	5.4-9
MUR1605CTR	5.4-9
MUR1610CT	5.4-9
MUR1610CTR	5.4-9
MUR1615CT	5.4-9
MUR1615CTR	5.4-9
MUR1620CT	5.4-9
MUR1620CTR	5.4-9
MUR1630CT	5.4-9
MUR1640CT	5.4-9
MUR1650CT	5.4-9
MUR1660CT	5.4-9
MUR170E	5.4-8
MUR180E	5.4-8
MUR190E	5.4-8
MUR20020CT	5.4-10
MUR20040CT	5.4-10
MUR2505	5.4-9
MUR2510	5.4-9
MUR2515	5.4-9
MUR2515HX	6.3-16
MUR2515HXV	6.3-16
MUR2520	5.4-9
MUR3005PT	5.4-9
MUR3010PT	5.4-9
MUR3015PT	5.4-9
MUR3020	5.4-9
MUR3020PT	5.4-9
MUR3030	5.4-9
MUR3030PT	5.4-9
MUR3040	5.4-9
MUR3040PT	5.4-9
MUR3050PT	5.4-9
MUR3060PT	5.4-9
MUR405	5.4-8
MUR410	5.4-8
MUR4100E	5.4-8
MUR415	5.4-8
MUR420	5.4-8
MUR430	5.4-8
MUR440	5.4-8
MUR450	5.4-8
MUR460	5.4-8
MUR470E	5.4-8
MUR480E	5.4-8
MUR490E	5.4-8
MUR5005	5.4-10
MUR5010	5.4-10
MUR5010HX	6.3-16
MUR5010HXV	6.3-16
MUR5015	5.4-10
MUR5020	5.4-10
MUR5020HX	6.3-16
MUR5020HX	6.3-16
MUR5020HXV	6.3-16
MUR5020HXV	6.3-16
MUR5150E	5.4-2
MUR6020	5.4-10
MUR6030	5.4-10
MUR6040	5.4-10
MUR605CT	5.4-8
MUR610CT	5.4-8
MUR615CT	5.4-8
MUR620CT	5.4-8
MUR7005	5.4-10
MUR7010	5.4-10
MUR7015	5.4-10
MUR7020	5.4-10
MUR805	5.4-8
MUR810	5.4-8
MUR8100E	5.3-36
	5.4-8
MUR815	5.4-8
MUR820	5.4-8
MUR830	5.4-8
MUR840	5.4-8
MUR850	5.4-8
MUR860	5.4-8
MUR860E	5.3-36
MUR870E	5.4-8
MUR880E	5.3-36
MUR880E	5.4-8
MUR890E	5.4-8
MWA0204	5.8-39
MWA0211L	5.8-39
MWA0270	5.8-39
MWA0304	5.8-39
MWA0311L	5.8-39
MWA0370	5.8-39
MWA110	5.8-38
MWA120	5.8-38
MWA130	5.8-38
MWA131	5.8-38
MWA210	5.8-38
MWA220	5.8-38
MWA230	5.8-38
MWA310	5.8-38
MWA320	5.8-38
MWA330	5.8-38
MZC10A5HV	6.3-23
MZC100A5HV	6.3-23
MZC11A5HV	6.3-23
MZC110A5HV	6.3-23
MZC12A5HV	6.3-23
MZC120A5HV	6.3-23
MZC13A5HV	6.3-23
MZC130A5HV	6.3-23
MZC14A5HV	6.3-23
MZC140A5HV	6.3-23
MZC15A5HV	6.3-23
MZC150A5HB	6.3-23
MZC16A5HV	6.3-23
MZC160A5HV	6.3-23
MZC17A5HV	6.3-23
MZC170A5HV	6.3-23
MZC18A5HV	6.3-23
MZC180A5HV	6.3-23
MZC19A5HV	6.3-23
MZC190A5HV	6.3-23
MZC2.4A5HV	6.3-23
MZC2.5A5HV	6.3-23
MZC2.7A5HV	6.3-23
MZC2.8A5HV	6.3-23
MZC20A5HV	6.3-23
MZC200A5HV	6.3-23
MZC22A5HV	6.3-23
MZC24A5HV	6.3-23
MZC25A5HV	6.3-23
MZC27A5HV	6.3-23
MZC28A5HV	6.3-23
MZC3.0A5HV	6.3-23
MZC3.3A5HV	6.3-23
MZC3.9A5HV	6.3-23
MZC30A5HV	6.3-23
MZC33A5HV	6.3-23
MZC36A5HV	6.3-23
MZC39A5HV	6.3-23
MZC4.3A5HV	6.3-23
MZC4.7A5HV	6.3-23
MZC43A5HV	6.3-23
MZC47A5HV	6.3-23
MZC5.1A5HCV	6.3-23
MZC5.6A5HV	6.3-23
MZC51A5HV	6.3-23
MZC56A5HV	6.3-23

DEVICE	PAGE
MZC6.0A5HV	6.3-23
MZC6.2A5HV	6.3-23
MZC6.8A5HV	6.3-23
MZC60A5HV	6.3-23
MZC62A5HV	6.3-23
MZC68A5HV	6.3-23
MZC7.5A5HV	6.3-23
MZC75A5H	6.3-23
MZC8.2A5HV	6.3-23
MZC8.7AHV	6.3-23
MZC82A5HV	6.3-23
MZC87A5HV	6.3-23
MZC9.1A5HV	6.3-23
MZC91A5HV	6.3-23
MZD10	5.2-4
MZD100	5.2-5
MZD11	5.2-4
MZD110	5.2-5
MZD12	5.2-4
MZD120	5.2-5
MZD13	5.2-4
MZD130	5.2-5
MZD15	5.2-4
MZD150	5.2-5
MZD16	5.2-4
MZD160	5.2-5
MZD18	5.2-4
MZD180	5.2-5
MZD20	5.2-4
MZD200	5.2-5
MZD22	5.2-4
MZD24	5.2-4
MZD27	5.2-4
MZD3.9	5.2-4
MZD30	5.2-4
MZD33	5.2-4
MZD36	5.2-4
MZD39	5.2-4
MZD4.3	5.2-4
MZD4.7	5.2-4
MZD43	5.2-4
MZD47	5.2-4
MZD5.1	5.2-4
MZD5.6	5.2-4
MZD51	5.2-4
MZD56	5.2-4
MZD6.2	5.2-4
MZD6.8	5.2-4
MZD62	5.2-4
MZD68	5.2-4
MZD7.5	5.2-4
MZD75	5.2-5
MZD8.2	5.2-4
MZD82	5.2-5
MZD9.1	5.2-4
MZD91	5.2-5
MZPY10	5.2-4
MZPY100	5.2-5
MZPY11	5.2-4
MZPY12	5.2-4
MZPY13	5.2-4
MZPY15	5.2-4
MZPY16	5.2-4
MZPY18	5.2-4
MZPY20	5.2-4
MZPY22	5.2-4
MZPY24	5.2-4
MZPY27	5.2-4
MZPY3.9	5.2-4
MZPY30	5.2-4
MZPY33	5.2-4
MZPY36	5.2-4
MZPY39	5.2-4
MZPY4.3	5.2-4
MZPY4.7	5.2-4
MZPY43	5.2-4
MZPY47	5.2-4
MZPY5.1	5.2-4
MZPY5.6	5.2-4
MZPY51	5.2-4
MZPY56	5.2-4
MZPY6.2	5.2-4
MZPY6.8	5.2-4
MZPY62	5.2-4
MZPY68	5.2-4
MZPY7.5	5.2-4
MZPY75	5.2-5
MZPY8.2	5.2-4
MZPY82	5.2-5
MZPY9.1	5.2-4
MZPY91	5.2-5
MZP4728A	5.2-4
MZP4729A	5.2-4
MZP4730A	5.2-4
MZP4731A	5.2-4
MZP4732A	5.2-4
MZP4733A	5.2-4
MZP4734A	5.2-4
MZP4735A	5.2-4
MZP4736A	5.2-4
MZP4737A	5.2-4
MZP4738A	5.2-4
MZP4739A	5.2-4
MZP4740A	5.2-4
MZP4741A	5.2-4
MZP4742A	5.2-4
MZP4743A	5.2-4
MZP4744A	5.2-4
MZP4745A	5.2-4
MZP4746A	5.2-4
MZP4747A	5.2-4
MZP4748A	5.2-4
MZP4749A	5.2-4
MZP4750A	5.2-4
MZP4751A	5.2-4
MZP4752A	5.2-4
MZP4753A	5.2-4
MZP4754A	5.2-4
MZP4755A	5.2-4
MZP4756A	5.2-4
MZP4757A	5.2-4
MZP4758A	5.2-4
MZP4759A	5.2-4
MZP4760A	5.2-4
MZP4761A	5.2-5
MZP4762A	5.2-5
MZP4763A	5.2-5
MZP4764A	5.2-5
MZ4099	5.2-2
MZ4100	5.2-2
MZ4101	5.2-2
MZ4102	5.2-2
MZ4103	5.2-2
MZ4104	5.2-2
MZ4614	5.2-2
MZ4615	5.2-2
MZ4616	5.2-2
MZ4617	5.2-2
MZ4618	5.2-2
MZ4619	5.2-2
MZ4620	5.2-2
MZ4621	5.2-2
MZ4622	5.2-2
MZ4623	5.2-2
MZ4624	5.2-2
MZ4625	5.2-2
MZ4626	5.2-2
MZ4627	5.2-2
MZ5520B	5.2-2
MZ5521B	5.2-2
MZ5522B	5.2-2
MZ5523B	5.2-2
MZ5524B	5.2-2
MZ5525B	5.2-2
MZ5526B	5.2-2
MZ5527B	5.2-2
MZ5528B	5.2-2
MZ5529B	5.2-2
MZ5530B	5.2-2
M68CDS16	2.4-14
M68CDS32	2.4-14
M68CDS8HC05	2.4-15
M68CDS8HC11	2.4-14
M68FADS	2.2-8
M68HC05	2.4-9
M68HC05C5EVS	2.4-15
M68HC05EVM	2.4-15
M68HC05E1EVS	2.4-15
M68HC05F6EVM	2.4-15
M68HC05G8EVM	2.4-15
M68HC05HL5EVS	2.4-15
M68HC05H2EVS	2.4-15
M68HC05L9EVM	2.4-15
M68HC05M4EVM	2.4-15
M68HC05PGMR	2.4-15
M68HC05P8EVS	2.4-15
M68HC05P9EVS	2.4-15
M68HC05T2EVS	2.4-15
M68HC05T4EVM	2.4-15
M68HC05T7EVM	2.4-15
M68HC11	2.4-5
M68HC11D3EVS	2.4-14
M68HC11EVB	2.4-14
M68HC11EVBU	2.4-14
M68HC11EVB2	2.4-14
M68HC11EVM	2.4-14
M68HC11F1EVS	2.4-14
M68HC11J6EVS	2.4-14
M68HC11KA4EVS	2.4-14
M68HC11K4EVS	2.4-14
M68HC11L6EVS	2.4-14
M68HC16	2.4-2
M68HC16Y1EVB	2.4-14
M68HC16Z1EVB	2.4-14
M68HC705B5PGMR	2.4-15
M68HC705J2PGMR	2.4-15
M68HC705P9PGMR	2.4-15
M68HC711D3EVB	2.4-14
M68HXBASM16	2.4-16
M68HXBASM2	2.4-16
M68HXBCC11	2.4-16
M68HXBCC16	2.4-16
M68HXBCC300	2.4-16
M68HXBRASM	2.4-16
M68KESW-PC1	2.2-8
M68000	2.2-2
M6801	2.4-8
M6804	2.4-11,
	2.4-37
M68040FPSP	2.2-8
M6805	2.4-11,
	2.4-37
M68300	2.4-2
M68302ADS	2.2-8
M68331EVK	2.4-14
M68331EVS	2.4-14
M68332EVK	2.4-14
M68332EVS	2.4-14
M68340EVS	2.2-8
M68701EVM	2.4-14
M68705EVM	2.4-15
M88000	2.3-2
NE556A,N	4.10-2
NE556D	4.10-2
NE556D	4.11-5
NIX8030	5.6-4
NIX8030S,F	5.6-8
PAA0105-29-6L	5.8-35
PAA0105-45-25L	5.8-35
PAA0105-50-50LAS	5.8-35
PAA0510-25-6L	5.8-35
PAA0810-24-5L	5.8-35
PAA0810-31-25L	5.8-35
PAA0810-38-100AB	5.8-35
PAA0810-38-100AM	5.8-35
PAA0810-38-5LAS	5.8-35
PAA0810-40-50L	5.8-35
PAA0810-40-50LAM	5.8-35
PAA0810-52-100AB	5.8-35
PAA0810-52-100AM	5.8-35
PAA0810-54-50LAS	5.8-35
PAA0810-54-50LSM	5.8-35
PAA1000-42-5L	5.8-35
PAA225-42-10L	5.8-35
PAE0105-29-6L	5.8-35
PAE0105-45-25L	5.8-35
PAE0105-50-50LAS	5.8-35
PAE0810-24-5L	5.8-35
PAE0810-31-25L	5.8-35
PAE0810-38-100AB	5.8-35
PAE0810-38-5LAS	5.8-35
PAE0810-40-50L	5.8-35
PAE0810-40-50LAM	5.8-35
PAE0810-52-100AM	5.8-35
PAE0810-54-50LAS	5.8-35
PAE0810-54-50LSM	5.8-35

DEVICE	PAGE
PAE1000-42-5L	5.8-35
PAE225-42-10L	5.8-35
PAM0105-29-6L	5.8-34
PAM0105-6-50L	5.8-34
PAM0105-7-25L	5.8-34
PAM0510-25-6L	5.8-34
PAM0810-24-5LA	5.8-34
PAM0810-6-50LA	5.8-34
PAM0810-7-25LA	5.8-34
PAM0810-8-10LA	5.8-34
PAM225-42-10LA	5.8-34
PA900-19-100L	5.8-33
PA900-19-60L	5.8-33
PA900-45-10LGC	5.8-33
PT9701B	5.8-9
PT9702B	5.8-9
PT9703B	5.8-9
PT9704B	5.8-9
PT9790	5.8-5
P6KE10	5.2-12
P6KE10A	5.2-12
P6KE100	5.2-13
P6KE100A	5.2-13
P6KE11	5.2-12
P6KE11A	5.2-12
P6KE110	5.2-13
P6KE110A	5.2-13
P6KE12	5.2-12
P6KE12A	5.2-12
P6KE120	5.2-14
P6KE120A	5.2-14
P6KE13	5.2-12
P6KE13A	5.2-12
P6KE130	5.2-14
P6KE130A	5.2-14
P6KE15	5.2-12
P6KE15A	5.2-12
P6KE150	5.2-14
P6KE150A	5.2-14
P6KE16	5.2-12
P6KE16A	5.2-12
P6KE160	5.2-14
P6KE160A	5.2-14
P6KE170	5.2-14
P6KE170A	5.2-14
P6KE18	5.2-13
P6KE18A	5.2-13
P6KE180	5.2-14
P6KE180A	5.2-14
P6KE20	5.2-13
P6KE20A	5.2-13
P6KE200	5.2-14
P6KE200A	5.2-14
P6KE22	5.2-13
P6KE22A	5.2-13
P6KE24	5.2-13
P6KE24A	5.2-13
P6KE27	5.2-13
P6KE27A	5.2-13
P6KE30	5.2-13
P6KE30A	5.2-13
P6KE33	5.2-13
P6KE33A	5.2-13
P6KE36	5.2-13
P6KE36A	5.2-13
P6KE39	5.2-13
P6KE39A	5.2-13
P6KE43	5.2-13
P6KE43A	5.2-13
P6KE47	5.2-13
P6KE47A	5.2-13
P6KE51	5.2-13
P6KE51A	5.2-13
P6KE56	5.2-13
P6KE56A	5.2-13
P6KE6.8	5.2-12
P6KE6.8A	5.2-12
P6KE62	5.2-13
P6KE62A	5.2-13
P6KE68	5.2-13
P6KE68A	5.2-13
P6KE7.5	5.2-12
P6KE7.5A	5.2-12
P6KE75	5.2-13
P6KE75A	5.2-13
P6KE8.2	5.2-12
P6KE8.2A	5.2-12
P6KE82	5.2-13
P6KE82A	5.2-13
P6KE9.1	5.2-12
P6KE9.1A	5.2-12
P6KE91	5.2-13
P6KE91A	5.2-13
P6SMB10AT3	5.2-20
P6SMB100AT3	5.2-20
P6SMB11AT3	5.2-20
P6SMB110AT3	5.2-20
P6SMB12AT3	5.2-20
P6SMB120AT3	5.2-20
P6SMB13AT3	5.2-20
P6SMB130AT3	5.2-20
P6SMB15AT3	5.2-20
P6SMB150AT3	5.2-20
P6SMB16AT3	5.2-20
P6SMB160AT3	5.2-20
P6SMB170AT3	5.2-20
P6SMB18AT3	5.2-20
P6SMB180AT3	5.2-20
P6SMB20AT3	5.2-20
P6SMB200AT3	5.2-20
P6SMB22AT3	5.2-20
P6SMB24AT3	5.2-20
P6SMB27AT3	5.2-20
P6SMB30AT3	5.2-20
P6SMB33AT3	5.2-20
P6SMB33AT3	5.2-20
P6SMB36AT3	5.2-20
P6SMB39AT3	5.2-20
P6SMB43AT3	5.2-20
P6SMB47AT3	5.2-20
P6SMB51AT3	5.2-20
P6SMB56AT3	5.2-20
P6SMB6.8AT3	5.2-20
P6SMB62AT3	5.2-20
P6SMB68AT3	5.2-20
P6SMB7.5AT3	5.2-20
P6SMB75AT3	5.2-20
P6SMB8.2AT3	5.2-20
P6SMB82AT3	5.2-20
P6SMB9.1AT3	5.2-20
P6SMB91AT3	5.2-20
RF1029	5.8-16
RF1030	5.8-16
RF1031	5.8-16
RF1032	5.8-16
RF3094	5.8-16
RF3095	5.8-16
RF3096	5.8-16
R710XPT	5.4-9
R711XPT	5.4-9
R712XPT	5.4-9
R714XPT	5.4-9
SAA1042V,AV	4.3-6
SA10	5.2-10
SA10A	5.2-10
SA100	5.2-11
SA100A	5.2-11
SA11	5.2-10
SA11A	5.2-10
SA110	5.2-12
SA110A	5.2-12
SA12	5.2-10
SA12A	5.2-10
SA120	5.2-12
SA120A	5.2-12
SA13	5.2-10
SA13A	5.2-10
SA130	5.2-12
SA130A	5.2-12
SA14	5.2-10
SA14A	5.2-10
SA15	5.2-10
SA15A	5.2-10
SA150	5.2-12
SA150A	5.2-12
SA16	5.2-10
SA16A	5.2-10
SA160	5.2-12
SA160A	5.2-12
SA17	5.2-10
SA17A	5.2-10
SA170	5.2-12
SA170A	5.2-12
SA18	5.2-11
SA18A	5.2-11
SA20	5.2-11
SA20A	5.2-11
SA22	5.2-11
SA22A	5.2-11
SA24	5.2-11
SA24A	5.2-11
SA26	5.2-11
SA26A	5.2-11
SA28	5.2-11
SA28A	5.2-11
SA30	5.2-11
SA30A	5.2-11
SA33	5.2-11
SA33A	5.2-11
SA36	5.2-11
SA36A	5.2-11
SA40	5.2-11
SA40A	5.2-11
SA43	5.2-11
SA43A	5.2-11
SA45	5.2-11
SA45A	5.2-11
SA48	5.2-11
SA48A	5.2-11
SA5.0	5.2-10
SA5.0A	5.2-10
SA51	5.2-11
SA51A	5.2-11
SA54	5.2-11
SA54A	5.2-11
SA58	5.2-11
SA58A	5.2-11
SA6.0	5.2-10
SA6.0A	5.2-10
SA6.5	5.2-10
SA6.5A	5.2-10
SA60	5.2-11
SA60A	5.2-11
SA64	5.2-11
SA64A	5.2-11
SA7.0	5.2-10
SA7.0A	5.2-10
SA7.5	5.2-10
SA7.5A	5.2-10
SA70	5.2-11
SA70A	5.2-11
SA75	5.2-11
SA75A	5.2-11
SA78	5.2-11
SA78A	5.2-11
SA8.0	5.2-10
SA8.0A	5.2-10
SA8.5	5.2-10
SA8.5A	5.2-10
SA85	5.2-11
SA85A	5.2-11
SA9.0	5.2-10
SA9.0A	5.2-10
SA90	5.2-11
SA90A	5.2-11
SC141B	5.5-13
SC141D	5.5-13
SC141M	5.5-13
SC141N	5.5-13
SC143B	5.5-13
SC143D	5.5-13
SC143M	5.5-13
SC146B	5.5-16
SC146D	5.5-16
SC146M	5.5-16
SC146N	5.5-16
SC149B	5.5-17
SC149D	5.5-17
SC149M	5.5-17
SC251B	5.5-18
SC251D	5.5-18
SC251M	5.5-18
SC260B	5.5-20
SC260B3	5.5-20
SC260D	5.5-20

DEVICE	PAGE
SC260D3	5.5-20
SC260M	5.5-20
SC260M3	5.5-20
SHP02-36-20	5.8-41
SHP05-18-10	5.8-41
SHP05-22-04	5.8-41
SHP05-34-04	5.8-41
SHP06-18-04	5.8-41
SHP10-15-08	5.8-41
SHP10-15-08-15	5.8-41
SHP10-17-04	5.8-41
SHP10-17-04-15	5.8-41
SL5500	5.6-3
SL5500S,F	5.6-7
SL5501	5.6-3
SL5501S,F	5.6-7
SN54LS/74LS0	3.1-21
SN54LS/74LS1	3.1-21
SN54LS/74LS10	3.1-21
SN54LS/74LS107A	3.1-22
SN54LS/74LS109A	3.1-22
SN54LS/74LS11	3.1-21
SN54LS/74LS112A	3.1-22
SN54LS/74LS113A	3.1-22
SN54LS/74LS114A	3.1-22
SN54LS/74LS12	3.1-21
SN54LS/74LS122	3.1-22
SN54LS/74LS123	3.1-22
SN54LS/74LS125A	3.1-22
SN54LS/74LS126A	3.1-22
SN54LS/74LS13	3.1-21
SN54LS/74LS132	3.1-22
SN54LS/74LS133	3.1-22
SN54LS/74LS137	3.1-22
SN54LS/74LS138	3.1-22
SN54LS/74LS139	3.1-22
SN54LS/74LS14	3.1-21
SN54LS/74LS145	3.1-22
SN54LS/74LS147	3.1-22
SN54LS/74LS148	3.1-22
SN54LS/74LS15	3.1-21
SN54LS/74LS151	3.1-22
SN54LS/74LS153	3.1-22
SN54LS/74LS155	3.1-22
SN54LS/74LS156	3.1-22
SN54LS/74LS157	3.1-22
SN54LS/74LS158	3.1-22
SN54LS/74LS160A	3.1-22
SN54LS/74LS161A	3.1-22
SN54LS/74LS162A	3.1-23
SN54LS/74LS163A	3.1-23
SN54LS/74LS164	3.1-23
SN54LS/74LS165	3.1-23
SN54LS/74LS166	3.1-23
SN54LS/74LS168	3.1-23
SN54LS/74LS169	3.1-23
SN54LS/74LS170	3.1-23
SN54LS/74LS173A	3.1-23
SN54LS/74LS174	3.1-23
SN54LS/74LS175	3.1-23
SN54LS/74LS181	3.1-23
SN54LS/74LS190	3.1-23
SN54LS/74LS191	3.1-23
SN54LS/74LS192	3.1-23
SN54LS/74LS193	3.1-23
SN54LS/74LS194A	3.1-23
SN54LS/74LS195A	3.1-23
SN54LS/74LS196	3.1-23
SN54LS/74LS197	3.1-23
SN54LS/74LS2	3.1-21
SN54LS/74LS20	3.1-21
SN54LS/74LS21	3.1-21
SN54LS/74LS22	3.1-21
SN54LS/74LS221	3.1-23
SN54LS/74LS240	3.1-23
SN54LS/74LS241	3.1-23
SN54LS/74LS242	3.1-23
SN54LS/74LS243	3.1-23
SN54LS/74LS244	3.1-23
SN54LS/74LS245	3.1-23
SN54LS/74LS247	3.1-23
SN54LS/74LS248	3.1-23
SN54LS/74LS249	3.1-23
SN54LS/74LS253	3.1-23
SN54LS/74LS256	3.1-23
SN54LS/74LS257A	3.1-23
SN54LS/74LS258A	3.1-23
SN54LS/74LS259	3.1-24
SN54LS/74LS26	3.1-21
SN54LS/74LS260	3.1-24
SN54LS/74LS266	3.1-24
SN54LS/74LS27	3.1-21
SN54LS/74LS273	3.1-24
SN54LS/74LS279	3.1-24
SN54LS/74LS28	3.1-21
SN54LS/74LS280	3.1-24
SN54LS/74LS283	3.1-24
SN54LS/74LS290	3.1-24
SN54LS/74LS293	3.1-24
SN54LS/74LS298	3.1-24
SN54LS/74LS299	3.1-24
SN54LS/74LS3	3.1-21
SN54LS/74LS30	3.1-21
SN54LS/74LS32	3.1-21
SN54LS/74LS322A	3.1-24
SN54LS/74LS323	3.1-24
SN54LS/74LS33	3.1-21
SN54LS/74LS348	3.1-24
SN54LS/74LS352	3.1-24
SN54LS/74LS353	3.1-24
SN54LS/74LS365A	3.1-24
SN54LS/74LS366A	3.1-24
SN54LS/74LS367A	3.1-24
SN54LS/74LS368A	3.1-24
SN54LS/74LS37	3.1-21
SN54LS/74LS373	3.1-24
SN54LS/74LS374	3.1-24
SN54LS/74LS375	3.1-24
SN54LS/74LS377	3.1-24
SN54LS/74LS378	3.1-24
SN54LS/74LS379	3.1-24
SN54LS/74LS38	3.1-21
SN54LS/74LS386	3.1-24
SN54LS/74LS390	3.1-24
SN54LS/74LS393	3.1-24
SN54LS/74LS398	3.1-24
SN54LS/74LS399	3.1-24
SN54LS/74LS4	3.1-21
SN54LS/74LS40	3.1-21
SN54LS/74LS42	3.1-21
SN54LS/74LS47	3.1-21
SN54LS/74LS48	3.1-21
SN54LS/74LS490	3.1-24
SN54LS/74LS5	3.1-21
SN54LS/74LS51	3.1-21
SN54LS/74LS54	3.1-21
SN54LS/74LS540	3.1-24
SN54LS/74LS541	3.1-24
SN54LS/74LS55	3.1-21
SN54LS/74LS569	3.1-25
SN54LS/74LS623	3.1-25
SN54LS/74LS640	3.1-25
SN54LS/74LS641	3.1-25
SN54LS/74LS642	3.1-25
SN54LS/74LS645	3.1-25
SN54LS/74LS669	3.1-25
SN54LS/74LS670	3.1-25
SN54LS/74LS682	3.1-25
SN54LS/74LS684	3.1-25
SN54LS/74LS688	3.1-25
SN54LS/74LS73A	3.1-21
SN54LS/74LS74A	3.1-21
SN54LS/74LS748	3.1-25
SN54LS/74LS75	3.1-21
SN54LS/74LS76A	3.1-22
SN54LS/74LS77	3.1-22
SN54LS/74LS795	3.1-25
SN54LS/74LS796	3.1-25
SN54LS/74LS797	3.1-25
SN54LS/74LS798	3.1-25
SN54LS/74LS8	3.1-21
SN54LS/74LS83A	3.1-22
SN54LS/74LS848	3.1-25
SN54LS/74LS85	3.1-22
SN54LS/74LS86	3.1-22
SN54LS/74LS9	3.1-21
SN54LS/74LS90	3.1-22
SN54LS/74LS92	3.1-22
SN54LS/74LS93	3.1-22
SN54LS/74LS95B	3.1-22
SN6170	5.5-6
SN74LS136	3.1-22
SN74LS251	3.1-23
SN74LS395	3.1-24
SN74LS783	3.1-25
SN74LS785	3.1-25
SN75173	4.6-5
	4.6-6
SN75175	4.6-5
	4.6-6
S2800A	5.5-5
S2800B	5.5-5
S2800D	5.5-5
S2800F	5.5-5
S2800M	5.5-5
S2800N	5.5-5
S6210A	5.5-6
S6210B	5.5-6
S6210D	5.5-6
S6210M	5.5-6
S6220A	5.5-6
S6220B	5.5-6
S6220D	5.5-6
S6220M	5.5-6
TCA5600	4.9-3
TCF5600	4.9-3
TDA1085A	4.3-7
TDA1085C	4.3-7
TDA1185A	4.3-7
TDA3190	4.8-3
TDA3190	4.8-4
TDA3301B	4.8-3
TIL111	5.6-3
TIL111S,F	5.6-7
TIL112	5.6-3
TIL112S,F	5.6-7
TIL113	5.6-4
TIL113S,F	5.6-8
TIL116	5.6-3
TIL116S,F	5.6-7
TIL117	5.6-3
TIL117S,F	5.6-7
TIL119	5.6-4
TIL119S,F	5.6-8
TIL126	5.6-3
TIL126S,F	5.6-7
TIP140	5.3-21
TIP141	5.3-21
TIP142	5.3-21
TIP145	5.3-21
TIP146	5.3-21
TIP147	5.3-21
TIP2955	5.3-21
TIP3055	5.3-21
TIP33B	5.3-21
TIP33C	5.3-21
TIP34B	5.3-21
TIP34C	5.3-21
TIP35A	5.3-21
TIP35B	5.3-21
TIP35C	5.3-21
TIP36A	5.3-21
TIP36B	5.3-21
TIP36C	5.3-21
TL062AC	4.1-4
TL062C	4.1-4
TL062M	4.1-5
TL062V	4.1-4
TL064AC	4.1-5
TL064C	4.1-5
TL064CD	4.11-5
TL064M	4.1-6
TL064V	4.1-6
TL071AC	4.1-3
TL071C	4.1-3
TL071CD,ACD	4.11-5
TL072AC	4.1-4
TL072C	4.1-4
TL072CD,ACD	4.11-5
TL072M	4.1-5
TL074AC	4.1-5
TL074C	4.1-5

DEVICE	PAGE
TL074M	4.1-6
TL081AC	4.1-3
TL081C	4.1-3
TL081CD,ACD	4.11-5
TL082AC	4.1-4
TL082C	4.1-4
TL082CD,ACD	4.11-5
TL082M	4.1-5
TL084AC	4.1-5
TL084C	4.1-5
TL084M	4.1-6
TL431ACD,AID,CD,ID	4.11-5
TL431C,AC	4.4-2
TL431I, AI	4.4-2
TL431M	4.4-2
TL780-05C	4.2-2
TL780-12C	4.2-3
TL780-15C	4.2-3
TPM401	5.8-9
TPM4040	5.8-9
TPM405	5.8-9
TPM4100	5.8-9
TPM4130	5.8-9
TPM425	5.8-9
TPV3100	5.8-17
TPV375	5.8-17
TPV376	5.8-17
TPV385	5.8-17
TPV387	5.8-17
TPV394A	5.8-17
TPV5051	5.8-17
TPV5055B	5.8-17
TPV590	5.8-17
TPV591	5.8-17
TPV593	5.8-17
TPV595A	5.8-17
TPV596A	5.8-17
TPV597	5.8-17
TPV598	5.8-17
TPV695A	5.8-17
TPV7025	5.8-17
TPV8100B	5.8-17
TPV8200B	5.8-17
TP3004	5.8-12
TP3005	5.8-12
TP3006	5.8-12
TP3019	5.8-12
TP3019S	5.8-12
TP3020A	5.8-12
TP3021	5.8-12
TP3022B	5.8-12
TP3024B	5.8-12
TP3031	5.8-12
TP3040	5.8-12
TP3060	5.8-12
TP3061	5.8-12
TP3062	5.8-12
TP3098	5.8-22
TP3098	5.8-26
TP3400	5.8-23
TP3400	5.8-26
TP5002	5.8-11
TP5002S	5.8-11
TP5015	5.8-11
TP5025	5.8-11
TP5040	5.8-11
TP5050	5.8-11
TP5060	5.8-11
TP62601	5.8-16
TP62602	5.8-16
TP63601	5.8-16
TP63602	5.8-16
TP64601	5.8-16
TP64602	5.8-16
TP9380	5.8-7
TP9383	5.8-7
TP9386	5.8-6
TP9733	5.8-6
T2322B	5.5-11
T2322D	5.5-11
T2322M	5.5-11
T2323B	5.5-12
T2323D	5.5-12
T2323M	5.5-12
T2500B	5.5-12
T2500BFP	5.5-13
T2500D	5.5-12
T2500DFP	5.5-13
T2500M	5.5-12
T2500MFP	5.5-13
T2500N	5.5-12
T2500NFP	5.5-13
T2800B	5.5-14
T2800D	5.5-14
T2800M	5.5-14
T2801B	5.5-13
T2801D	5.5-13
T2801M	5.5-13
T2802B	5.5-14
T2802D	5.5-14
T2802M	5.5-14
T4100M	5.5-18
T6411B	5.5-21
T6411D	5.5-21
T6411M	5.5-21
T6411N	5.5-21
T6420B	5.5-23
T6420D	5.5-23
T6420M	5.5-23
T6420N	5.5-23
T6421B	5.5-22
T6421D	5.5-22
T6421M	5.5-22
T6421N	5.5-22
UAA1016B	4.3-3
UAA1041D	4.11-5
UC2842A	4.2-6
UC2842AD, BD, BD1	4.11-5
UC2842B	4.2-6
UC2843A	4.2-6
UC2843AD, BD, BD1	4.11-5
UC2843C	4.2-7
UC2844	4.2-6
UC2844B	4.2-7
UC2844D, BD, BD1	4.11-5
UC2845	4.2-6
UC2845D, BD, BD1	4.11-5
UC3842A	4.2-6
UC3842AD, BD, BD1	4.11-5
UC3842B	4.2-6
UC3843A	4.2-6
UC3843AD, BD, BD1	4.11-5
UC3843B	4.2-7
UC3844	4.2-6
UC3844B	4.2-7
UC3844D, BD, BD1	4.11-5
UC3845	4.2-6
UC3845D, BD, BD1	4.11-5
UC3845B	4.2-7
ULN2001A	4.6-7
ULN2001A	4.6-8
ULN2002A	4.6-7
ULN2002A	4.6-8
ULN2003A	4.6-7
ULN2003A	4.6-8
ULN2004A	4.6-7
ULN2004A	4.6-8
ULN2068B	4.6-7
ULN2068B	4.6-8
ULN2801	4.6-7
ULN2801	4.6-8
ULN2802	4.6-7
ULN2802	4.6-8
ULN2803	4.6-7
ULN2803	4.6-8
ULN2804	4.6-7
ULN2804	4.6-8
XC56ADC16S	2.1-5
XC56002RC40	2.1-3
XC56156FE40	2.1-2
XC56200LC10	2.1-5
XC68HC05F6	2.4-10
XC68HC05G8	2.4-10
XC68HC05L5	2.4-10
XC68HC05L6	2.4-10
XC68HC05M4	2.4-10
XC68HC05P3	2.4-10
XC68HC05P8	2.4-10
XC68HC05P9	2.4-10
XC68HC05T2	2.4-10
XC68HC05T4	2.4-10
XC68HC05T7	2.4-10
XC68HC68L9	2.4-12
XC68HC705B5	2.4-11, 2.4-68
XC68HC705C5	2.4-11, 2.4-68
XC68HC705C9	2.4-11, 2.4-68
XC68HC705D9	2.4-11, 2.4-46
XC68HC705E1	2.4-11
XC68HC705F6	2.4-11
XC68HC705H2	2.4-11, 2.5-3
XC68HC705P9	2.4-11
XC68HC705T10	2.4-11
XC68HC805C4	2.4-12
XC96002RC33	2.1-4
XC96002RC40	2.1-4
ZPD10	5.2-2
ZPD11	5.2-2
ZPD12	5.2-2
ZPD13	5.2-2
ZPD15	5.2-2
ZPD16	5.2-2
ZPD18	5.2-2
ZPD2.7	5.2-2
ZPD20	5.2-2
ZPD22	5.2-2
ZPD24	5.2-2
ZPD27	5.2-2
ZPD3.0	5.2-2
ZPD3.3	5.2-2
ZPD3.6	5.2-2
ZPD3.9	5.2-2
ZPD30	5.2-2
ZPD33	5.2-2
ZPD4.3	5.2-2
ZPD4.7	5.2-2
ZPD5.1	5.2-2
ZPD5.6	5.2-2
ZPD6.2	5.2-2
ZPD6.8	5.2-2
ZPD7.5	5.2-2
ZPD8.2	5.2-2
ZPD9.1	5.2-2
µ34023	4.2-7
1.5KE10	5.2-16
1.5KE10A	5.2-16
1.5KE100	5.2-17
1.5KE100A	5.2-17
1.5KE11	5.2-16
1.5KE11A	5.2-16
1.5KE110	5.2-17
1.5KE110A	5.2-17
1.5KE12	5.2-16
1.5KE12A	5.2-16
1.5KE120	5.2-17
1.5KE120A	5.2-17
1.5KE13	5.2-16
1.5KE13A	5.2-16
1.5KE130	5.2-17
1.5KE130A	5.2-17
1.5KE15	5.2-16
1.5KE15A	5.2-16
1.5KE150	5.2-17
1.5KE150A	5.2-17
1.5KE16	5.2-16
1.5KE16A	5.2-16
1.5KE160	5.2-17
1.5KE160A	5.2-17
1.5KE170	5.2-17
1.5KE170A	5.2-17
1.5KE18	5.2-16
1.5KE18A	5.2-16
1.5KE180	5.2-17
1.5KE180A	5.2-17
1.5KE20	5.2-16
1.5KE20A	5.2-16
1.5KE200	5.2-17
1.5KE200A	5.2-17
1.5KE22	5.2-16

DEVICE	PAGE
1.5KE22A	5.2-16
1.5KE220	5.2-17
1.5KE220A	5.2-17
1.5KE24	5.2-16
1.5KE24A	5.2-16
1.5KE250	5.2-17
1.5KE250A	5.2-17
1.5KE27	5.2-16
1.5KE27A	5.2-16
1.5KE30	5.2-16
1.5KE30A	5.2-16
1.5KE33	5.2-16
1.5KE33A	5.2-16
1.5KE36	5.2-16
1.5KE36A	5.2-16
1.5KE39	5.2-16
1.5KE39A	5.2-16
1.5KE43	5.2-16
1.5KE43A	5.2-16
1.5KE47	5.2-16
1.5KE47A	5.2-16
1.5KE51	5.2-16
1.5KE51A	5.2-16
1.5KE56	5.2-17
1.5KE56A	5.2-17
1.5KE6.8	5.2-16
1.5KE6.8A	5.2-16
1.5KE62	5.2-17
1.5KE62A	5.2-17
1.5KE68	5.2-17
1.5KE68A	5.2-17
1.5KE7.5	5.2-16
1.5KE7.5A	5.2-16
1.5KE75	5.2-17
1.5KE75A	5.2-17
1.5KE8.2	5.2-16
1.5KE8.2A	5.2-16
1.5KE82	5.2-17
1.5KE82A	5.2-17
1.5KE9.1	5.2-16
1.5KE9.1A	5.2-16
1.5KE91	5.2-17
1.5KE91A	5.2-17
1.5SMC10AT3	5.2-22
1.5SMC11AT3	5.2-22
1.5SMC12AT3	5.2-22
1.5SMC13AT3	5.2-22
1.5SMC15AT3	5.2-22
1.5SMC16AT3	5.2-22
1.5SMC18AT3	5.2-22
1.5SMC20AT3	5.2-22
1.5SMC22AT3	5.2-22
1.5SMC24AT3	5.2-22
1.5SMC27AT3	5.2-22
1.5SMC30AT3	5.2-22
1.5SMC33AT3	5.2-22
1.5SMC36AT3	5.2-22
1.5SMC39AT3	5.2-22
1.5SMC43AT3	5.2-22
1.5SMC47AT3	5.2-22
1.5SMC51AT3	5.2-22
1.5SMC56AT3	5.2-22
1.5SMC6.8AT3	5.2-22
1.5SMC62AT3	5.2-22
1.5SMC68AT3	5.2-22
1.5SMC7.5AT3	5.2-22
1.5SMC75AT3	5.2-22
1.5SMC8.2AT3	5.2-22
1.5SMC82AT3	5.2-22
1.5SMC9.1AT3	5.2-22
1.5SMC91AT3	5.2-22
1M110ZS5	5.2-5
1M120ZS5	5.2-5
1M130ZS5	5.2-5
1M150ZS5	5.2-5
1M160ZS5	5.2-5
1M180ZS5	5.2-5
1M200ZS5	5.2-5
1N1183A	5.4-14
1N1184A	5.4-14
1N1186A	5.4-14
1N1188A	5.4-14
1N1190A	5.4-14
1N1199,A,B	5.4-13
1N1200,A,B	5.4-13
1N1202,A,B	5.4-13
1N1204,A,B	5.4-13
1N1206,A,B	5.4-13
1N3491	5.4-14
1N3492	5.4-14
1N3493	5.4-14
1N3495	5.4-14
1N3659	5.4-14
1N3660	5.4-14
1N3661	5.4-14
1N3663	5.4-14
1N3879	5.4-11
1N3880	5.4-11
1N3881	5.4-11
1N3883	5.4-11
1N3889	5.4-12
1N3890	5.4-12
1N3890	6.3-11
1N3890R	6.3-11
1N3891	5.4-12
	6.3-11
1N3891R	6.3-11
1N3893	5.4-12
	6.3-11
1N3893R	6.3-11
1N3899	5.4-12
1N3900	5.4-12
1N3901	5.4-12
1N3903	5.4-12
1N3909	5.4-12
1N3910	5.4-12
	6.3-11
1N3911	5.4-12
	6.3-11
1N3913	5.4-12
	6.3-11
1N4001	5.4-13
1N4002	5.4-13
1N4003	5.4-13
1N4004	5.4-13
1N4005	5.4-13
1N4006	5.4-13
1N4007	5.4-13
1N4370A	5.2-2
1N4371A	5.2-2
1N4372A	5.2-2
1N4565	5.2-9
1N4565A	5.2-9
1N4566	5.2-9
1N4566A	5.2-9
1N4567	5.2-9
1N4567A	5.2-9
1N4568	5.2-9
1N4568A	5.2-9
1N4569	5.2-9
1N4569A	5.2-9
1N4570	5.2-9
1N4570A	5.2-9
1N4571	5.2-9
1N4571A	5.2-9
1N4572	5.2-9
1N4572A	5.2-9
1N4573	5.2-9
1N4573A	5.2-9
1N4574	5.2-9
1N4574A	5.2-9
1N4678	5.2-2
1N4679	5.2-2
1N4680	5.2-2
1N4681	5.2-2
1N4682	5.2-2
1N4683	5.2-2
1N4684	5.2-2
1N4685	5.2-2
1N4686	5.2-2
1N4687	5.2-2
1N4688	5.2-2
1N4689	5.2-2
1N4690	5.2-2
1N4691	5.2-2
1N4692	5.2-2
1N4693	5.2-2
1N4694	5.2-2
1N4695	5.2-2
1N4696	5.2-2
1N4697	5.2-2
1N4698	5.2-2
1N4699	5.2-2
1N4700	5.2-2
1N4701	5.2-2
1N4702	5.2-2
1N4703	5.2-2
1N4704	5.2-2
1N4705	5.2-2
1N4706	5.2-2
1N4707	5.2-2
1N4708	5.2-2
1N4709	5.2-2
1N4710	5.2-2
1N4711	5.2-2
1N4712	5.2-2
1N4713	5.2-2
1N4714	5.2-2
1N4715	5.2-2
1N4716	5.2-2
1N4717	5.2-2
1N4719	5.4-13
1N4720	5.4-13
1N4721	5.4-13
1N4722	5.4-13
1N4723	5.4-13
1N4724	5.4-13
1N4725	5.4-13
1N4728A	5.2-4
1N4729A	5.2-4
1N4730A	5.2-4
1N4731A	5.2-4
1N4732A	5.2-4
1N4733A	5.2-4
1N4734A	5.2-4
1N4735A	5.2-4
1N4736A	5.2-4
1N4737A	5.2-4
1N4738A	5.2-4
1N4739A	5.2-4
1N4740A	5.2-4
1N4741A	5.2-4
1N4742A	5.2-4
1N4743A	5.2-4
1N4744A	5.2-4
1N4745A	5.2-4
1N4746A	5.2-4
1N4747A	5.2-4
1N4748A	5.2-4
1N4749A	5.2-4
1N4750A	5.2-4
1N4751A	5.2-4
1N4752A	5.2-4
1N4753A	5.2-4
1N4754A	5.2-4
1N4755A	5.2-4
1N4756A	5.2-4
1N4757A	5.2-4
1N4758A	5.2-4
1N4759A	5.2-4
1N4760A	5.2-4
1N4761A	5.2-5
1N4762A	5.2-5
1N4763A	5.2-5
1N4764A	5.2-5
1N4933	5.4-11
1N4934	5.4-11
1N4935	5.4-11
1N4936	5.4-11
1N4937	5.4-11
1N5221B	5.2-2
1N5222B	5.2-2
1N5223B	5.2-2
1N5224B	5.2-2
1N5225B	5.2-2
1N5226B	5.2-2
1N5227B	5.2-2
1N5228B	5.2-2
1N5229B	5.2-2
1N5230B	5.2-2
1N5231B	5.2-2
1N5232B	5.2-2
1N5233B	5.2-2
1N5234B	5.2-2

DEVICE	PAGE
1N5235B	5.2-2
1N5236B	5.2-2
1N5237B	5.2-2
1N5238B	5.2-2
1N5239B	5.2-2
1N5240B	5.2-2
1N5241B	5.2-2
1N5242B	5.2-2
1N5243B	5.2-2
1N5244B	5.2-2
1N5245B	5.2-2
1N5246B	5.2-2
1N5247B	5.2-2
1N5248B	5.2-2
1N5249B	5.2-2
1N5250B	5.2-2
1N5251B	5.2-2
1N5252B	5.2-2
1N5253B	5.2-2
1N5254B	5.2-2
1N5255B	5.2-2
1N5256B	5.2-2
1N5257B	5.2-2
1N5258B	5.2-2
1N5259B	5.2-2
1N5260B	5.2-2
1N5261B	5.2-2
1N5262B	5.2-2
1N5263B	5.2-2
1N5264B	5.2-2
1N5265B	5.2-2
1N5266B	5.2-2
1N5267B	5.2-3
1N5268B	5.2-3
1N5269B	5.2-3
1N5270B	5.2-3
1N5271B	5.2-3
1N5272B	5.2-3
1N5273B	5.2-3
1N5274B	5.2-3
1N5275B	5.2-3
1N5276B	5.2-3
1N5277B	5.2-3
1N5278B	5.2-3
1N5279B	5.2-3
1N5280B	5.2-3
1N5281B	5.2-3
1N5333B	5.2-4
1N5334B	5.2-4
1N5335B	5.2-4
1N5336B	5.2-4
1N5337B	5.2-4
1N5338B	5.2-4
1N5339B	5.2-4
1N5340B	5.2-4
1N5341B	5.2-4
1N5342B	5.2-4
1N5343B	5.2-4
1N5344B	5.2-4
1N5345B	5.2-4
1N5346B	5.2-4
1N5347B	5.2-4
1N5348B	5.2-4
1N5349B	5.2-4
1N5350B	5.2-4
1N5351B	5.2-4
1N5352B	5.2-4
1N5353B	5.2-4
1N5354B	5.2-4
1N5355B	5.2-4
1N5356B	5.2-4
1N5357B	5.2-4
1N5358B	5.2-4
1N5359B	5.2-4
1N5360B	5.2-4
1N5361B	5.2-4
1N5362B	5.2-4
1N5363B	5.2-4
1N5364B	5.2-4
1N5365B	5.2-4
1N5366B	5.2-4
1N5367B	5.2-4
1N5368B	5.2-4
1N5369B	5.2-4
1N5370B	5.2-4
1N5371B	5.2-4
1N5372B	5.2-4
1N5373B	5.2-4
1N5374B	5.2-5
1N5375B	5.2-5
1N5376B	5.2-5
1N5377B	5.2-5
1N5378B	5.2-5
1N5379B	5.2-5
1N5380B	5.2-5
1N5381B	5.2-5
1N5382B	5.2-5
1N5383B	5.2-5
1N5384B	5.2-5
1N5385B	5.2-5
1N5386B	5.2-5
1N5387B	5.2-5
1N5388B	5.2-5
1N5400	5.4-13
1N5401	5.4-13
1N5402	5.4-13
1N5404	5.4-13
1N5406	5.4-13
1N5772	6.3-10
1N5774	6.3-10
1N5817	5.4-3
1N5818	5.4-3
1N5819	5.4-3
1N5820	5.4-3
1N5821	5.4-3
1N5822	5.4-3
1N5823	5.4-3
1N5824	5.4-3
1N5825	5.4-3
1N5826	5.4-4
1N5827	5.4-4
1N5828	5.4-4
1N5829	5.4-4
1N5830	5.4-4
1N5831	5.4-4
1N5832	5.4-5
1N5833	5.4-5
1N5834	5.4-5
1N5908	5.2-15
1N5913B	5.2-4
1N5914B	5.2-4
1N5915B	5.2-4
1N5916B	5.2-4
1N5917B	5.2-4
1N5918B	5.2-4
1N5919B	5.2-4
1N5920B	5.2-4
1N5921B	5.2-4
1N5922B	5.2-4
1N5923B	5.2-4
1N5924B	5.2-4
1N5925B	5.2-4
1N5926B	5.2-4
1N5927B	5.2-4
1N5928B	5.2-4
1N5929B	5.2-4
1N5930B	5.2-4
1N5931B	5.2-4
1N5932B	5.2-4
1N5933B	5.2-4
1N5934B	5.2-4
1N5935B	5.2-4
1N5936B	5.2-4
1N5937B	5.2-4
1N5938B	5.2-4
1N5939B	5.2-4
1N5940B	5.2-4
1N5941B	5.2-4
1N5942B	5.2-4
1N5943B	5.2-4
1N5944B	5.2-4
1N5945B	5.2-4
1N5946B	5.2-5
1N5947B	5.2-5
1N5948B	5.2-5
1N5949B	5.2-5
1N5950B	5.2-5
1N5951B	5.2-5
1N5952B	5.2-5
1N5953B	5.2-5
1N5954B	5.2-5
1N5955B	5.2-5
1N5956B	5.2-5
1N5985B	5.2-2
1N5986B	5.2-2
1N5987B	5.2-2
1N5988B	5.2-2
1N5989B	5.2-2
1N5990B	5.2-2
1N5991B	5.2-2
1N5992B	5.2-2
1N5993B	5.2-2
1N5994B	5.2-2
1N5995B	5.2-2
1N5996B	5.2-2
1N5997B	5.2-2
1N5998B	5.2-2
1N5999B	5.2-2
1N6000B	5.2-2
1N6001B	5.2-2
1N6002B	5.2-2
1N6003B	5.2-2
1N6004B	5.2-2
1N6005B	5.2-2
1N6006B	5.2-2
1N6007B	5.2-2
1N6008B	5.2-2
1N6009B	5.2-2
1N6010B	5.2-2
1N6011B	5.2-2
1N6012B	5.2-2
1N6013B	5.2-2
1N6014B	5.2-2
1N6015B	5.2-2
1N6016B	5.2-2
1N6017B	5.2-2
1N6018B	5.2-2
1N6019B	5.2-2
1N6020B	5.2-2
1N6021B	5.2-3
1N6022B	5.2-3
1N6023B	5.2-3
1N6024B	5.2-3
1N6025B	5.2-3
1N6095	5.4-4
1N6096	5.4-4
1N6097	5.4-6
1N6098	5.4-6
1N6267	5.2-16
1N6267A	5.2-16
1N6268	5.2-16
1N6268A	5.2-16
1N6269	5.2-16
1N6269A	5.2-16
1N6270	5.2-16
1N6270A	5.2-16
1N6271	5.2-16
1N6271A	5.2-16
1N6272	5.2-16
1N6272A	5.2-16
1N6273	5.2-16
1N6273A	5.2-16
1N6274	5.2-16
1N6274A	5.2-16
1N6275	5.2-16
1N6275A	5.2-16
1N6276	5.2-16
1N6276A	5.2-16
1N6277	5.2-16
1N6277A	5.2-16
1N6278	5.2-16
1N6278A	5.2-16
1N6279	5.2-16
1N6279A	5.2-16
1N6280	5.2-16
1N6280A	5.2-16
1N6281	5.2-16
1N6281A	5.2-16
1N6282	5.2-16
1N6282A	5.2-16
1N6283	5.2-16
1N6283A	5.2-16
1N6284	5.2-16
1N6284A	5.2-16

DEVICE	PAGE
1N6285	5.2-16
1N6285A	5.2-16
1N6286	5.2-16
1N6286A	5.2-16
1N6287	5.2-16
1N6287A	5.2-16
1N6288	5.2-16
1N6288A	5.2-16
1N6289	5.2-17
1N6289A	5.2-17
1N6290	5.2-17
1N6290A	5.2-17
1N6291	5.2-17
1N6291A	5.2-17
1N6292	5.2-17
1N6292A	5.2-17
1N6293	5.2-17
1N6293A	5.2-17
1N6294	5.2-17
1N6294A	5.2-17
1N6295	5.2-17
1N6295A	5.2-17
1N6296	5.2-17
1N6296A	5.2-17
1N6297	5.2-17
1N6297A	5.2-17
1N6298	5.2-17
1N6298A	5.2-17
1N6299	5.2-17
1N6299A	5.2-17
1N6300	5.2-17
1N6300A	5.2-17
1N6301	5.2-17
1N6301A	5.2-17
1N6302	5.2-17
1N6302A	5.2-17
1N6303	5.2-17
1N6303A	5.2-17
1N6373	5.2-15
1N6374	5.2-15
1N6375	5.2-15
1N6376	5.2-15
1N6377	5.2-15
1N6378	5.2-15
1N6379	5.2-15
1N6380	5.2-15
1N6381	5.2-15
1N6382	5.2-15
1N6383	5.2-15
1N6384	5.2-15
1N6385	5.2-15
1N6386	5.2-15
1N6387	5.2-15
1N6388	5.2-15
1N6389	5.2-15
1N6508	6.3-10
1N6509	6.3-10
1N746A	5.2-2
1N747A	5.2-2
1N748A	5.2-2
1N749A	5.2-2
1N750A	5.2-2
1N751A	5.2-2
1N752A	5.2-2
1N753A	5.2-2
1N754A	5.2-2
1N755A	5.2-2
1N756A	5.2-2
1N757A	5.2-2
1N758A	5.2-2
1N759A	5.2-2
1N821	5.2-9
1N821A	5.2-9
1N823	5.2-9
1N823A	5.2-9
1N825	5.2-9
1N825A	5.2-9
1N827	5.2-9
1N827A	5.2-9
1N829	5.2-9
1N829A	5.2-9
1N957B	5.2-2
1N958B	5.2-2
1N959B	5.2-2
1N960B	5.2-2
1N961B	5.2-2
1N962B	5.2-2
1N963B	5.2-2
1N964B	5.2-2
1N965B	5.2-2
1N966B	5.2-2
1N967B	5.2-2
1N968B	5.2-2
1N969B	5.2-2
1N970B	5.2-2
1N971B	5.2-2
1N972B	5.2-2
1N973B	5.2-2
1N974B	5.2-2
1N975B	5.2-2
1N976B	5.2-2
1N977B	5.2-2
1N978B	5.2-2
1N979B	5.2-2
1N980B	5.2-2
1N981B	5.2-2
1N982B	5.2-3
1N983B	5.2-3
1N984B	5.2-3
1N985B	5.2-3
1N986B	5.2-3
1N987B	5.2-3
1N988B	5.2-3
1N989B	5.2-3
1N990B	5.2-3
1N991B	5.2-3
1N992B	5.2-3
1SMB10AT3	5.2-19
1SMB100AT3	5.2-19
1SMB11AT3	5.2-19
1SMB110AT3	5.2-19
1SMB12AT3	5.2-19
1SMB120AT3	5.2-19
1SMB13AT3	5.2-19
1SMB130AT3	5.2-19
1SMB14AT3	5.2-19
1SMB15AT3	5.2-19
1SMB150AT3	5.2-19
1SMB16AT3	5.2-19
1SMB160AT3	5.2-19
1SMB17AT3	5.2-19
1SMB170AT3	5.2-19
1SMB18AT3	5.2-19
1SMB20AT3	5.2-19
1SMB22AT3	5.2-19
1SMB24AT3	5.2-19
1SMB26AT3	5.2-19
1SMB28AT3	5.2-19
1SMB30AT3	5.2-19
1SMB33AT3	5.2-19
1SMB36AT3	5.2-19
1SMB40AT3	5.2-19
1SMB43AT3	5.2-19
1SMB45AT3	5.2-19
1SMB48AT3	5.2-19
1SMB5.0AT3	5.2-19
1SMB51AT3	5.2-19
1SMB54AT3	5.2-19
1SMB58AT3	5.2-19
1SMB5913BT3	5.2-7
1SMB5914BT3	5.2-7
1SMB5915BT3	5.2-7
1SMB5916BT3	5.2-7
1SMB5917BT3	5.2-7
1SMB5918BT3	5.2-7
1SMB5919BT3	5.2-7
1SMB5920BT3	5.2-7
1SMB5921BT3	5.2-7
1SMB5922BT3	5.2-7
1SMB5923BT3	5.2-7
1SMB5924BT3	5.2-7
1SMB5925BT3	5.2-7
1SMB5926BT3	5.2-7
1SMB5927BT3	5.2-7
1SMB5928BT3	5.2-7
1SMB5929BT3	5.2-7
1SMB5930BT3	5.2-7
1SMB5931BT3	5.2-7
1SMB5932BT3	5.2-7
1SMB5933BT3	5.2-7
1SMB5934BT3	5.2-7
1SMB5935BT3	5.2-7
1SMB5936BT3	5.2-7
1SMB5937BT3	5.2-7
1SMB5938BT3	5.2-7
1SMB5939BT3	5.2-7
1SMB5940BT3	5.2-7
1SMB5941BT3	5.2-8
1SMB5942BT3	5.2-8
1SMB5943BT3	5.2-8
1SMB5944BT3	5.2-8
1SMB5945BT3	5.2-8
1SMB5946BT3	5.2-8
1SMB5947BT3	5.2-8
1SMB5948BT3	5.2-8
1SMB5949BT3	5.2-8
1SMB5950BT3	5.2-8
1SMB5951BT3	5.2-8
1SMB5952BT3	5.2-8
1SMB5953BT3	5.2-8
1SMB5954BT3	5.2-8
1SMB5955BT3	5.2-8
1SMB5956BT3	5.2-8
1SMB6.0AT3	5.2-19
1SMB6.5AT3	5.2-19
1SMB60AT3	5.2-19
1SMB64AT3	5.2-19
1SMB7.0AT3	5.2-19
1SMB7.5AT3	5.2-19
1SMB70AT3	5.2-19
1SMB75AT3	5.2-19
1SMB78AT3	5.2-19
1SMB8.0AT3	5.2-19
1SMB8.5AT3	5.2-19
1SMB85AT3	5.2-19
1SMB9.0AT3	5.2-19
1SMB90AT3	5.2-19
1SMC10AT3	5.2-21
1SMC11AT3	5.2-21
1SMC12AT3	5.2-21
1SMC13AT3	5.2-21
1SMC14AT3	5.2-21
1SMC15AT3	5.2-21
1SMC16AT3	5.2-21
1SMC17AT3	5.2-21
1SMC18AT3	5.2-21
1SMC20AT3	5.2-21
1SMC22AT3	5.2-21
1SMC24AT3	5.2-21
1SMC26AT3	5.2-21
1SMC28AT3	5.2-21
1SMC30AT3	5.2-21
1SMC33AT3	5.2-21
1SMC36AT3	5.2-21
1SMC40AT3	5.2-21
1SMC43AT3	5.2-21
1SMC45AT3	5.2-21
1SMC48AT3	5.2-21
1SMC5.0AT3	5.2-21
1SMC51AT3	5.2-21
1SMC54AT3	5.2-21
1SMC58AT3	5.2-21
1SMC6.0AT3	5.2-21
1SMC6.5AT3	5.2-21
1SMC60AT3	5.2-21
1SMC64AT3	5.2-21
1SMC7.0AT3	5.2-21
1SMC7.5AT3	5.2-21
1SMC70AT3	5.2-21
1SMC75AT3	5.2-21
1SMC78AT3	5.2-21
1SMC8.0AT3	5.2-21
1SMC8.5AT3	5.2-21
1SMC9.0AT3	5.2-21
10E416	6.2-5
10E501	6.2-5
10E504	6.2-5
10E507	6.2-5
10E511	6.2-5
10E516	6.2-5
10E541	6.2-5
10E542	6.2-5
10E543	6.2-5

DEVICE	PAGE
10E551	6.2-5
10E558	6.2-5
10H1000	6.2-9
10H1001	6.2-9
10H1002	6.2-9
10H1003	6.2-9
10H1040	6.2-9
10H1041	6.2-9
10H1042	6.2-9
10H1043	6.2-9
10H416	6.2-8
10H500	6.2-8
10H501	6.2-8
10H502	6.2-8
10H503	6.2-8
10H504	6.2-8
10H505	6.2-8
10H506	6.2-8
10H507	6.2-8
10H509	6.2-8
10H513	6.2-8
10H515	6.2-8
10H516	6.2-8
10H517	6.2-8
10H518	6.2-8
10H519	6.2-8
10H521	6.2-8
10H524	6.2-8
10H525	6.2-8
10H531	6.2-8
10H536	6.2-8
10H541	6.2-8
10H558	6.2-8
10H560	6.2-8
10H561	6.2-8
10H562	6.2-8
10H564	6.2-8
10H571	6.2-8
10H574	6.2-8
10H576	6.2-8
10H581	6.2-8
10H586	6.2-8
10H588	6.2-8
10H589	6.2-8
10H609	6.2-8
10H610	6.2-8
10H750	6.2-8
10H751	6.2-9
100E416	6.2-5
100E501	6.2-5
100E504	6.2-5
100E507	6.2-5
100E511	6.2-5
100E516	6.2-5
100E541	6.2-5
100E542	6.2-5
100E543	6.2-5
100E551	6.2-5
100E558	6.2-5
100E851	6.2-5
108 (LM108)	6.2-2
108A (LM108A)	6.2-2
117K (LM117K)	6.2-2
124 (LM124)	6.2-2
137K (LM137K)	6.2-2
139 (LM139)	6.2-2
139A (LM139A)	6.2-2
14001A	6.2-20
14001B	6.2-20
14002A	6.2-20
14007A	6.2-20
14011A	6.2-20
14011B	6.2-20
14012B	6.2-20
14013B	6.2-20
14014B	6.2-20
14015B	6.2-20
14016B	6.2-20
14017B	6.2-20
14018B	6.2-20
14020B	6.2-20
14021B	6.2-20
14023A	6.2-20
14023B	6.2-20
14024B	6.2-20
14025A	6.2-20
14025B	6.2-20
14027B	6.2-20
14028B	6.2-20
14029B	6.2-20
14040B	6.2-20
14042B	6.2-20
14043B	6.2-20
14044B	6.2-20
14046B	6.2-20
14049A	6.2-20
14050B	6.2-20
14051B	6.2-20
14052B	6.2-20
14053B	6.2-20
14066B	6.2-20
14069A	6.2-20
14070B	6.2-20
14071B	6.2-20
14072B	6.2-20
14073B	6.2-21
14075B	6.2-21
14076B	6.2-21
14081B	6.2-21
14082B	6.2-21
14093B	6.2-21
14094B	6.2-21
14099B	6.2-21
14161B	6.2-21
14174B	6.2-21
14175B	6.2-21
14490A	6.2-21
14502B	6.2-21
14503B	6.2-21
14504B	6.2-21
14511B	6.2-21
14512B	6.2-21
145146-2	6.2-4
145151-2	6.2-4
145152-2	6.2-4
145155-2	6.2-4
145156-2	6.2-4
145157-2	6.2-4
145158-2	6.2-4
14517B	6.2-21
14518B	6.2-21
14519B	6.2-21
14520B	6.2-21
14532B	6.2-21
14536B	6.2-21
14538B	6.2-21
14539B	6.2-21
14541B	6.2-21
14555B	6.2-21
14557B	6.2-21
14572A	6.2-21
14584B	6.2-21
14585B	6.2-21
1489A	6.2-2
1525A	6.2-2
1527A	6.2-2
1555 (555)	6.2-2
1556 (556)	6.2-2
1558S	6.2-2
158 (LM158)	6.2-2
1648M	6.2-9
1709 (LM709)	6.2-3
1723 (LM723)	6.2-3
1733 (LM733)	6.2-3
1741 (LM741)	6.2-3
1741S (LM741)	6.2-3
1747 (LM747)	6.2-3
193A	6.2-3
2C2222AHV	6.3-22
2C2369AHV	6.3-22
2C2484HV	6.3-22
2C2605HV	6.3-22
2C2857	5.8-45
2C2857HV	6.3-22
2C2907AHV	6.3-22
2C3019HV	6.3-22
2C3251AHV	6.3-22
2C3439HV	6.3-22
2C3468HV	6.3-22
2C3501HV	6.3-22
2C3553HV	6.3-22
2C3716HV	6.3-22
2C3741HV	6.3-22
2C3767HV	6.3-22
2C3792HV	6.3-22
2C3866	5.8-45
2C3866AHV	6.3-22
2C4957	5.8-45
2C5108	5.8-45
2C5109HV	6.3-22
2C5160	5.8-45
2C5339HV	6.3-22
2C5583	5.8-45
2C5943	5.8-45
2C6052HV	6.3-22
2C6059HV	6.3-22
2C6193HV	6.3-22
2C918HV	6.3-22
2N1595	5.5-3
2N1596	5.5-3
2N1597	5.5-3
2N1599	5.5-3
2N2060	6.3-9
2N2219A	6.3-7
2N2222	6.3-7
2N2222A	6.3-7
2N2323	5.5-3
2N2324	5.5-3
2N2326	5.5-3
2N2329	5.5-3
2N2369A	6.3-8
2N2484	6.3-7
2N2605	6.3-7
2N2857	5.8-23
	5.8-28
	5.8-45
2N2904	6.3-7
2N2905A	6.3-7
2N2906A	6.3-7
2N2907	6.3-7
2N2907A	6.3-7
2N3013	6.3-8
2N3019S	6.3-7
2N3054	5.3-32
2N3054A	5.3-32
2N3055	5.3-28
2N3055A	5.3-28
2N3055A	5.3-34
2N3227	6.3-8
2N3251A	6.3-7
2N3439	6.3-8
2N3440	6.3-8
2N3441	5.3-32
2N3442	5.3-27
2N3467	6.3-8
2N3486A	6.3-7
2N3501	6.3-8
2N3506	6.3-8
2N3507	6.3-8
2N3553	5.8-6
	5.8-24
2N3584	5.3-32
2N3585	5.3-32
2N3634	6.3-8
2N3635	6.3-8
2N3636	6.3-8
2N3637	6.3-8
2N3700	6.3-7
2N3715	5.3-27
	6.3-5
2N3716	5.3-27
2N3716	6.3-5
2N3719	5.3-33
2N3720	5.3-33
2N3735	6.3-8
2N3737	6.3-8
2N3738	5.3-32
2N3739	5.3-32
	6.3-6
2N3740	5.3-32
	6.3-6
2N3741	5.3-32
	6.3-6

DEVICE	PAGE
2N3743	6.3-8
2N3764	6.3-8
2N3766	5.3-32
	6.3-6
2N3767	5.3-32
	6.3-6
2N3771	5.3-30
2N3772	5.3-29
2N3773	5.3-29
2N3791	5.3-27
	6.3-5
2N3792	5.3-27
	6.3-5
2N3810	6.3-9
2N3811	6.3-9
2N3819	6.3-9
2N3820	6.3-9
2N3821	6.3-9
2N3866	5.8-9
	5.8-24
2N3866	5.8-28
2N3866	5.8-45
2N3866A	5.8-24
2N3867	5.3-33
2N3867S	6.3-6
2N3868	5.3-33
2N3868S	6.3-6
2N3870	5.5-8
2N3871	5.5-8
2N3872	5.5-8
2N3873	5.5-8
2N4033	6.3-7
	6.3-8
2N4233A	5.3-32
2N4240	5.3-32
2N4261	6.3-7
2N4398	5.3-30
2N4399	5.3-30
	6.3-5
2N4405	6.3-7
	6.3-8
2N4416A	6.3-9
2N4427	5.8-7
2N4449	6.3-8
2N4854	6.3-9
2N4856	6.3-9
2N4857	6.3-9
2N4858	6.3-9
2N4912	5.3-32
2N4918	5.3-23
2N4919	5.3-23
2N4920	5.3-23
2N4921	5.3-23
2N4922	5.3-23
2N4923	5.3-23
2N4931	6.3-8
2N4957	5.8-23
	5.8-45
2N4958	5.8-28
2N5031	5.8-23
2N5038	5.3-29
	6.3-5
2N5039	5.3-29
	6.3-5
2N5060	5.5-2
2N5061	5.5-2
2N5062	5.5-2
2N5064	5.5-2
2N5108	5.8-24
	5.8-28
	5.8-45
2N5109	5.8-24
	5.8-26
2N5160	5.8-9
	5.8-28
	5.8-45
2N5168	5.5-6
2N5179	5.8-23
	5.8-26
	5.8-28
2N5191	5.3-24
2N5192	5.3-24
2N5194	5.3-24
2N5195	5.3-24
2N5301	5.3-30
2N5302	5.3-30
2N5302	6.3-5
2N5303	5.3-29
2N5303	6.3-5
2N5336	5.3-33
2N5337	5.3-33
2N5338	5.3-33
2N5339	5.3-33
	6.3-6
2N5416S	6.3-8
2N5428	5.3-32
2N5430	5.3-32
2N5444	5.5-23
2N5445	5.5-23
2N5446	5.5-23
2N5571	5.5-18
2N5572	5.5-18
2N5582	6.3-7
2N5583	5.8-24
	5.8-45
2N5630	5.3-29
2N5631	5.3-29
2N5641	5.8-6
2N5642	5.8-6
2N5643	5.8-6
2N5655	5.3-23
2N5656	5.3-23
2N5657	5.3-23
2N5683	5.3-31
	6.3-5
2N5684	5.3-31
	6.3-5
2N5685	5.3-31
	6.3-5
2N5686	5.3-31
	6.3-5
2N5745	5.3-29
	6.3-5
2N5758	5.3-27
2N5794	6.3-9
2N5796	6.3-9
2N5835	5.8-23
2N5875	5.3-27
2N5876	5.3-27
2N5877	5.3-27
2N5878	5.3-27
2N5879	5.3-28
2N5880	5.3-28
2N5881	5.3-28
2N5882	5.3-28
2N5883	5.3-30
2N5884	5.3-30
2N5885	5.3-30
2N5886	5.3-30
2N5943	5.8-24
	5.8-26
2N5943	5.8-28
	5.8-28
	5.8-45
2N6027	5.5-25
2N6028	5.5-25
2N6030	5.3-29
2N6031	5.3-29
2N6035	5.3-24
2N6036	5.3-24
2N6038	5.3-24
2N6039	5.3-24
2N6050	5.3-28
2N6051	5.3-28
	6.3-5
2N6052	5.3-28
	6.3-5
2N6053	5.3-27
2N6054	5.3-27
2N6055	5.3-27
2N6056	5.3-27
2N6057	5.3-28
2N6058	5.3-28
	6.3-5
2N6059	5.3-28
	6.3-5
2N6071	5.5-12
2N6071A	5.5-12
2N6071B	5.5-12
2N6073	5.5-12
2N6073A	5.5-12
2N6073B	5.5-12
2N6075	5.5-12
2N6075A	5.5-12
2N6075B	5.5-12
2N6116	6.3-11
2N6118	6.3-11
2N6160	5.5-21
2N6161	5.5-21
2N6162	5.5-21
2N6163	5.5-22
2N6164	5.5-22
2N6165	5.5-22
2N6167	5.5-6
2N6168	5.5-6
2N6169	5.5-6
2N6171	5.5-9
2N6172	5.5-9
2N6173	5.5-9
2N6174	5.5-9
2N6190	5.3-33
2N6191	5.3-33
2N6193	5.3-33
2N6193	6.3-6
2N6211	5.3-32
2N6212	5.3-32
2N6213	5.3-32
2N6235	5.3-32
2N6237	5.5-3
2N6238	5.5-3
2N6239	5.5-3
2N6240	5.5-3
2N6241	5.5-3
2N6251	5.3-28
2N6274	5.3-31
	6.3-5
2N6275	5.3-31
2N6277	5.3-31
	6.3-5
2N6282	5.3-29
2N6283	5.3-29
	6.3-5
2N6284	5.3-29
	6.3-5
2N6285	5.3-29
2N6286	5.3-29
	6.3-5
2N6287	5.3-29
	6.3-5
2N6294	5.3-32
2N6295	5.3-32
2N6296	5.3-32
2N6297	5.3-32
2N6298	5.3-32
	6.3-6
2N6299	5.3-32
	6.3-6
2N6300	5.3-32
	6.3-6
2N6301	5.3-32
	6.3-6
2N6303	5.3-33
2N6304	5.8-23
	5.8-26
2N6306	6.3-5
2N6308	6.3-5
2N6317	5.3-32
2N6318	5.3-32
2N6328	5.3-30
2N6338	5.3-30
2N6339	5.3-30
2N6340	5.3-30
2N6341	5.3-30
2N6342	5.5-14
2N6342A	5.5-18
2N6343	5.5-14
2N6343A	5.5-18
2N6344	5.5-14
2N6344A	5.5-18
2N6345	5.5-14
2N6345A	5.5-18
2N6346	5.5-14
2N6346A	5.5-18
2N6347	5.5-14
2N6347A	5.5-18
2N6348	5.5-14
2N6348A	5.5-18
2N6349	5.5-14
	5.5-18

DEVICE	PAGE
2N6378	5.3-31
	6.3-5
2N6379	5.3-31
	6.3-5
2N6383	5.3-27
2N6385	6.3-5
2N6394	5.5-5
2N6395	5.5-5
2N6396	5.5-5
2N6397	5.5-5
2N6398	5.5-5
2N6399	5.5-5
2N6400	5.5-6
2N6401	5.5-6
2N6402	5.5-6
2N6403	5.5-6
2N6404	5.5-6
2N6405	5.5-6
2N6421	5.3-32
2N6436	5.3-30
2N6437	5.3-30
	6.3-5
2N6438	5.3-30
	6.3-5
2N6439	5.8-9
2N6504	5.5-7
2N6505	5.5-7
2N6506	5.5-7
2N6507	5.5-7
2N6508	5.5-7
2N6509	5.5-7
2N6546	6.3-5
2N6547	5.3-29
	6.3-5
2N6576	5.3-28
2N6577	5.3-28
2N6578	5.3-28
2N6603	5.8-23
2N6604	5.8-23
2N6609	5.3-29
2N6618	5.8-23
2N6648	5.3-27
2N6650	6.3-5
2N6679	5.8-23
	5.8-27
2N6756	6.3-6
2N6758	6.3-6
2N6760	6.3-6
2N6762	6.3-6
2N6764	6.3-6
2N6766	6.3-6
2N6768	6.3-6
2N6770	6.3-6
2N682	5.5-7
2N683	5.5-7
2N6836	5.3-29
2N6837	5.3-30
2N685	5.5-7
2N688	5.5-7
2N690	5.5-7
2N692	5.5-7
2N6985	5.8-9
2N6986	5.8-9
2N6987	6.3-9
2N6988	6.3-9
2N6989	6.3-9
2N6990	6.3-9
2N708	6.3-8
2N869A	6.3-8
2N914	6.3-8
2N918	6.3-7
2N930	6.3-7
2SA1302	5.3-22
2SA1302	5.3-34
2SA1306B	5.3-34
2SC3281	5.3-22
2SC3281	5.3-34
2SC3298B	5.3-34
2003A	6.2-3
26LS31	6.2-3
26LS32	6.2-3
3EZ10D5	5.2-4
3EZ100D5	5.2-5
3EZ11D5	5.2-4
3EZ110D5	5.2-5
3EZ12D5	5.2-4
3EZ120D5	5.2-5
3EZ13D5	5.2-4
3EZ130D5	5.2-5
3EZ14D5	5.2-4
3EZ140D5	5.2-5
3EZ15D5	5.2-4
3EZ150D5	5.2-5
3EZ16D5	5.2-4
3EZ160D5	5.2-5
3EZ17D5	5.2-4
3EZ170D5	5.2-5
3EZ18D5	5.2-4
3EZ180D5	5.2-5
3EZ19D5	5.2-4
3EZ190D5	5.2-5
3EZ20D5	5.2-4
3EZ200D5	5.2-5
3EZ22D5	5.2-4
3EZ220D5	5.2-5
3EZ24D5	5.2-4
3EZ240D5	5.2-5
3EZ27D5	5.2-4
3EZ270D5	5.2-5
3EZ28D5	5.2-4
3EZ3.9D5	5.2-4
3EZ30D5	5.2-4
3EZ300D5	5.2-5
3EZ33D5	5.2-4
3EZ330D5	5.2-5
3EZ36D5	5.2-4
3EZ360D5	5.2-5
3EZ39D5	5.2-4
3EZ4.3D5	5.2-4
3EZ4.7D5	5.2-4
3EZ400D5	5.2-5
3EZ43D5	5.2-4
3EZ47D5	5.2-4
3EZ5.1D5	5.2-4
3EZ5.6D5	5.2-4
3EZ51D5	5.2-4
3EZ56D5	5.2-4
3EZ6.2D5	5.2-4
3EZ6.8D5	5.2-4
3EZ62D5	5.2-4
3EZ68D5	5.2-4
3EZ7.5D5	5.2-4
3EZ75D5	5.2-5
3EZ8.2D5	5.2-4
3EZ82D5	5.2-5
3EZ9.1D5	5.2-4
3EZ91D5	5.2-5
35074A	6.3-3
4N25,A	5.6-3
4N25AS,F	5.6-7
4N25S,F	5.6-7
4N26	5.6-3
4N26S,F	5.6-7
4N27	5.6-3
4N27S,F	5.6-7
4N28	5.6-3
4N28S,F	5.6-7
4N29,A	5.6-4
4N29,AS,F	5.6-8
4N30	5.6-4
4N30S,F	5.6-8
4N31	5.6-4
4N31S,F	5.6-8
4N32,A	5.6-4
4N32,A,S,F	.6-8
4N33	5.6-4
4N33S,F	5.6-8
4N35	5.6-3
4N35S,F	5.6-7
4N36	5.6-3
4N36S,F	5.6-7
4N37	5.6-3
4N37S,F	5.6-7
4N38	5.6-4
4N38,A	5.6-3
4N38,A,S,F	5.6-7
4N38A	5.6-4
4N38A,S,F	5.6-9
4N38S,F	5.6-9
4180-40	6.2-22
4180-30	6.2-22
4180-35	6.2-22
A9636A	4.6-6
511000-120	6.2-23
511000-110	6.2-23
511000-80	6.2-23
511000-90	6.2-23
54ACT00	6.2-11
54ACT02	6.2-11
54ACT138	6.2-11
54ACT151	6.2-11
54ACT244	6.2-11
54ACT245	6.2-11
54ACT299	6.2-11
54ACT373	6.2-11
54ACT374	6.2-11
54ACT74	6.2-11
54AC00	6.2-11
54AC02	6.2-11
54AC138	6.2-11
54AC153	6.2-11
54AC174	6.2-11
54AC240	6.2-11
54AC244	6.2-11
54AC245	6.2-11
54AC273	6.2-11
54AC299	6.2-11
54AC373	6.2-11
54AC374	6.2-11
54AC540	6.2-11
54AC541	6.2-11
54AC86	6.2-11
54F00	6.2-12
54F02	6.2-12
54F04	6.2-12
54F08	6.2-12
54F10	6.2-12
54F109	6.2-12
54F11	6.2-12
54F125	6.2-12
54F126	6.2-12
54F13	6.2-12
54F132	6.2-12
54F138	6.2-12
54F139	6.2-12
54F14	6.2-12
54F151	6.2-12
54F153	6.2-12
54F157A	6.2-12
54F158A	6.2-12
54F161A	6.2-12
54F163A	6.2-12
54F174	6.2-12
54F175	6.2-12
54F182	6.2-12
54F194	6.2-12
54F20	6.2-12
54F240	6.2-12
54F241	6.2-12
54F243	6.2-12
54F244	6.2-12
54F245	6.2-12
54F251	6.2-12
54F253	6.2-12
54F257	6.2-12
54F258	6.2-12
54F280	6.2-12
54F283	6.2-12
54F32	6.2-12
54F352	6.2-13
54F353	6.2-13
54F373	6.2-13
54F374	6.2-13
54F378	6.2-13
54F379	6.2-13
54F381	6.2-13
54F382	6.2-13
54F398	6.2-13
54F399	6.2-13
54F521	6.2-13
54F533	6.2-13
54F534	6.2-13
54F64	6.2-13

DEVICE	PAGE
54F74	6.2-13
54F803	6.2-13
54F86	6.2-13
54HCT04	6.2-14
54HCT240	6.2-14
54HCT245	6.2-15
54HCT373	6.2-15
54HCT374	6.2-15
54HCU04	6.2-14
54HC00	6.2-14
54HC02	6.2-14
54HC03	6.2-14
54HC04	6.2-14
54HC08	6.2-14
54HC10	6.2-14
54HC109	6.2-14
54HC11	6.2-14
54HC112	6.2-14
54HC113	6.2-14
54HC132	6.2-14
54HC138	6.2-14
54HC139	6.2-14
54HC14	6.2-14
54HC151	6.2-14
54HC153	6.2-14
54HC157	6.2-14
54HC158	6.2-14
54HC161	6.2-14
54HC163	6.2-14
54HC164	6.2-14
54HC165	6.2-14
54HC174	6.2-14
54HC175	6.2-14
54HC20	6.2-14
54HC240	6.2-14
54HC244	6.2-14
54HC245	6.2-14
54HC257	6.2-15
54HC27	6.2-15
54HC273	6.2-15
54HC30	6.2-15
54HC32	6.2-15
54HC373	6.2-15
54HC374	6.2-15
54HC390	6.2-15
54HC393	6.2-15
54HC4020	6.2-15
54HC4024	6.2-15
54HC4040	6.2-15
54HC4060	6.2-15
54HC4075	6.2-15
54HC4078	6.2-15
54HC42	6.2-15
54HC4538	6.2-15
54HC4543	6.2-15
54HC595	6.2-15
54HC73	6.2-15
54HC74	6.2-15
54HC85	6.2-15
54HC86	6.2-15
54LS00	6.2-16
54LS02	6.2-16
54LS03	6.2-16
54LS04	6.2-16
54LS05	6.2-16
54LS08	6.2-16
54LS09	6.2-16
54LS10	6.2-16
54LS107A	6.2-16
54LS109A	6.2-16
54LS11	6.2-16
54LS112A	6.2-16
54LS113A	6.2-16
54LS114A	6.2-16
54LS12	6.2-16
54LS122	6.2-16
54LS123	6.2-16
54LS125A	6.2-16
54LS126A	6.2-16
54LS13	6.2-16
54LS132	6.2-16
54LS133	6.2-16
54LS138	6.2-16
54LS139	6.2-16
54LS14	6.2-16
54LS151	6.2-16
54LS153	6.2-16
54LS155	6.2-16
54LS157	6.2-17
54LS158	6.2-17
54LS160A	6.2-17
54LS161A	6.2-17
54LS162A	6.2-17
54LS163A	6.2-17
54LS164	6.2-17
54LS165	6.2-17
54LS166	6.2-17
54LS169	6.2-17
54LS173	6.2-17
54LS174	6.2-17
54LS175	6.2-17
54LS181	6.2-17
54LS190	6.2-17
54LS191	6.2-17
54LS192	6.2-17
54LS193	6.2-17
54LS194A	6.2-17
54LS195A	6.2-17
54LS20	6.2-17
54LS21	6.2-17
54LS221	6.2-17
54LS240	6.2-17
54LS241	6.2-17
54LS242	6.2-17
54LS243	6.2-17
54LS244	6.2-18
54LS245	6.2-18
54LS251	6.2-18
54LS253	6.2-18
54LS257A	6.2-18
54LS258A	6.2-18
54LS259	6.2-18
54LS26	6.2-18
54LS266	6.2-18
54LS27	6.2-18
54LS273	6.2-18
54LS279	6.2-18
54LS28	6.2-18
54LS280	6.2-18
54LS283	6.2-18
54LS298	6.2-18
54LS30	6.2-18
54LS32	6.2-18
54LS365A	6.2-18
54LS367A	6.2-18
54LS368A	6.2-18
54LS37	6.2-18
54LS373	6.2-18
54LS374	6.2-18
54LS375	6.2-18
54LS377	6.2-18
54LS390	6.2-19
54LS393	6.2-19
54LS399	6.2-19
54LS40	6.2-19
54LS42A	6.2-19
54LS47	6.2-19
54LS51	6.2-19
54LS645	6.2-19
54LS670	6.2-19
54LS716	6.2-19
54LS718	6.2-19
54LS719	6.2-19
54LS73A	6.2-19
54LS74A	6.2-19
54LS75	6.2-19
54LS76A	6.2-19
54LS85	6.2-19
54LS86	6.2-19
54LS95B	6.2-19
56001-20	6.2-30
56824-25	6.2-22
56824-30	6.2-22
56824-35	6.2-22
6164-55	6.2-23
6164-70	6.2-23
62L64-15	6.2-24
62L64-25	6.2-25
62L64-45	6.2-25
62L64-35	6.2-25
62L64-45	6.2-25
62L68-15	6.2-25
62L68-25	6.2-25
62L68-35	6.2-25
62L68-45	6.2-25
62L68-55	6.2-25
62L68-70	6.2-25
62L87-35	6.2-25
62L87-45	6.2-25
62L88-15	6.2-26
62L88-25	6.2-26
62L88-35	6.2-26
62L88-45	6.2-26
62L90-15	6.2-26
62L90-25	6.2-26
62L90-35	6.2-26
62L90-45	6.2-26
6205-15	6.2-23
6205-25	6.2-23
6206-15	6.2-23
6206-25	6.2-23
6206-35	6.2-23
6206-100	6.2-24
6206-45	6.2-24
6206-55	6.2-24
6206-70	6.2-24
62110-15	6.2-22
62110-25	6.2-22
62110-35	6.2-22
6226-100	6.2-24
6226-25	6.2-24
6226-30	6.2-24
6226-45	6.2-24
6226-55	6.2-24
6226-70	6.2-24
6229-100	6.2-24
6229-25	6.2-24
6229-30	6.2-24
6229-35	6.2-24
6229-45	6.2-24
6229-55	6.2-24
6229-70	6.2-24
62486-15	6.2-22
62486-25	6.2-22
62486-35	6.2-22
6264-15	6.2-24
6264-25	6.2-24
6264-35	6.2-24
6264-45	6.2-24
6268-55	6.2-25
6268-70	6.2-25
6268-35	6.2-25
6268-45	6.2-25
6287-35	6.2-25
6287-45	6.2-25
6288-15	6.2-26
6288-25	6.2-26
6288-35	6.2-26
6288-45	6.2-26
6290-15	6.2-26
6290-25	6.2-26
6290-35	6.2-26
6290-45	6.2-26
6294-30	6.2-22
6294-35	6.2-22
6294-40	6.2-22
62940-15	6.2-22
62940-25	6.2-22
62940-35	6.2-22
62990-15	6.2-22
62990-25	6.2-22
62990-35	6.2-22
6706-15	6.2-23
6706-20	6.2-23
68A09	6.2-27
68A21	6.2-27
68A488	6.2-27
68A50	6.2-27
68B09	6.2-27
68B21	6.2-27
68B488	6.2-27
68B50	6.2-27
68HC000-10	6.2-29
68HC000-12	6.2-29
68HC000-8	6.2-29

DEVICE	PAGE
68HC001-8	6.2-29
68HC11A0	6.2-29
68HC11A1	6.2-29
68HC16Z1	6.2-29
68HC705C8	6.2-29
68HC811E2	6.2-29
68000-10	6.2-28
68000-10T	6.2-28
68000-8	6.2-27
68000-8T	6.2-27
68020-16	6.2-28
68020-20	6.2-28
68020-25	6.2-28
68030-16	6.2-28
68030-20	6.2-28
68030-25	6.2-28
68030-33	6.2-28
68442-8	6.2-29
68605-10	6.2-29
6875A	6.2-3, 27
68851-12	6.2-30
68851-16	6.2-30
68881-16	6.2-28
68881-20	6.2-28
68882-16	6.2-28
68882-20	6.2-28
68882-25	6.2-28
68882-33	6.2-28
7806A	6.2-3
7808A	6.2-4
7812A	6.2-4
7815A	6.2-4
7818A	6.2-4
7908A	6.2-4
7912A	6.2-4
7915A	6.2-4
7918A	6.2-4
88100-20	6.2-30
88100-33	6.2-30
88200-20	6.2-30
88200-33	6.2-30
93L422	6.2-22
93L422A	6.2-22
96002-27	6.2-30
111	6.2-2
193	6.2-3
431	6.3-3
1488	6.2-2
1489	6.2-2
1508	6.2-2
1526	6.2-2
1536	6.2-2
1537	6.2-2
1539	6.2-2
1545	6.2-2
1550	6.2-2
1554	6.2-2
1558	6.2-2
1563	6.2-2
1568	6.2-2
1569	6.2-2
1590	6.2-2
1594	6.2-3
1595	6.2-3
1596	6.2-3
1650	6.2-9
1651	6.2-9
1654	6.2-9
1660	6.2-9
1662	6.2-9
1664	6.2-9
1670	6.2-9
1672	6.2-9
1678	6.2-9
1690	6.2-9
1692	6.2-9
3517	6.3-3
3523	6.3-3
4324	6.2-21
4344	6.2-21
6800	6.2-27
6802	6.2-27
6809	6.2-27
6821	6.2-27
6840	6.2-27
6845	6.2-27
6850	6.2-27
6852	6.2-27
6854	6.2-27
7805	6.2-3
7806	6.2-3
7808	6.2-4
7812	6.2-4
7815	6.2-4
7818	6.2-4
7908	6.2-4
7912	6.2-4
7915	6.2-4
7918	6.2-4
10319	6.2-2
10500	6.2-5
10501	6.2-5
10502	6.2-5
10503	6.2-5
10504	6.2-5
10505	6.2-5
10506	6.2-5
10507	6.2-6
10509	6.2-6
10513	6.2-6
10514	6.2-6
10515	6.2-6
10516	6.2-6
10517	6.2-6
10518	6.2-6
10519	6.2-6
10521	6.2-6
10523	6.2-6
10524	6.2-6
10525	6.2-6
10530	6.2-6
10531	6.2-6
10533	6.2-6
10535	6.2-6
10536	6.2-6
10537	6.2-6
10538	6.2-6
10539	6.2-6,22
10541	6.2-6
10545	6.2-6,22
10549	6.2-6,22
10552	6.2-6,22
10553	6.2-6
10558	6.2-6
10560	6.2-6
10561	6.2-6
10562	6.2-6
10563	6.2-6
10564	6.2-6
10565	6.2-6
10566	6.2-6
10568	6.2-6
10570	6.2-6
10571	6.2-7
10572	6.2-7
10573	6.2-7
10574	6.2-7
10575	6.2-7
10576	6.2-7
10578	6.2-7
10579	6.2-7
10580	6.2-7
10581	6.2-7
10582	6.2-7
10586	6.2-7
10590	6.2-7
10591	6.2-7
10595	6.2-7
10597	6.2-7
10598	6.2-7
10610	6.2-7
10611	6.2-7
10612	6.2-7
10616	6.2-7
10631	6.2-7
12502	6.2-10
12509	6.2-10
12511	6.2-10
12513	6.2-10
12514	6.2-10
12515	6.2-10
12540	6.2-10
12561	6.2-10
35035	6.2-3
35039	6.2-3
35063	6.3-3
35074	6.3-3
35102	6.3-3
35164	6.3-3
35174	6.3-3
35179	6.2-3
55107	6.2-3
68040	6.2-28
68302	6.2-30
68332	6.2-29
68340	6.2-29
68488	6.2-27
88913	6.2-11
88914	6.2-11
88915	6.2-11
93415	6.2-22
93422	6.2-22
93425	6.2-22
145406	6.2-4
145407	6.2-4

SUBJECT INDEX

Subject | Page

A

A-D Converters 2.15-,4.5-2
A-D Converters 4.5-2
ADPCM Transcoder 4.7-19
ADS (Application Development Sys.) . 2.1-6,2.2-8,2.4-14
AGC Amplifiers 4.1-7
AIEG Power MOSFET Modules 5.3-37
Amplifiers, High Frequency 4.1-7
Amplifiers, Integrated Circuit 4.1-2
Amplifiers, Operational 4.1-2
Amplifiers, RF 5.8-31
Amplifiers, Video 4.1-8, 4.8-4
Analog Cells 1.1-10
Analog to Digital Converters 4.5-2
Analog Transmission 4.7-6
Analog-to-Digital Converters 2.1-5,4.5-2
Analog-to-Digital/Digital-to-Analog Converters 4.5-3
Application Development System 2.2-8
Application Development Systems . . . 2.1-6,2.2-8,2.4-14
Application Specific Integrated Cir. (ASICs) . . 1.0-1, 1.1-1
Application Specific Rectifiers 5.4-2
Application Specific Static RAMs 2.7-3
ASIC Design Centers 1.1-8
ASICs (Application Specific Integrated Cir.) . 1.0-1, 1.1-1
Audio Circuits, Consumer Radio 4.8-2
Audio Control Circuit, Telephone 4.7-13
Audio Power Transistors 5.3-33
Automotive Electronic Circuits 4.9-2
Automotive Transient Suppressors 5.2-23, 5.4-2
Automotive Transient Suppressors 5.2-23, 5.4-2
Axial Leaded 5.2-10, 5.2-2
A-D/D-A Converters 4.5-3

B

Balanced Modulator/Demodulator, RF 4.7-3
BIC (Broadband Interface Controller) 2.2-6
Bidirectional Transient Voltage Suppressors 5.2-10
Bipolar Darlington Transistor 5.3-39
Bipolar High-Speed ECL and ETL Arrays . . 1.1-1, 1.1-2
Bipolar Power Transistors 5.3-16
Bipolar Transient Voltage Suppressors 5.2-10
Bipolar Transistors (EMS) 5.3-40
Bit Rate Generators 4.7-19
Broadband Interface Controller (BIC) 2.2-6
Brushless DC Motor Controllers 4.3-4
Bus Interface Circuits, Microprocessor 2.0-1,4-42
Bus Transceivers, Single-Ended 4.6-5

C

C-Compiler Upgrades 2.1-7
C-Compilers 2.1-7
Cache/Memory Management Units (CMMU) 2.3-3
CAFIR Filter 2.1-5
Calling Line I.D. Receiver Evaluation Kit 4.7-20
Calling Line Identification Receiver (CLID) 4.7-20

Subject | Page

Carrierband Modem 2.2-6
Cascadable Adaptive Finite Impulse Response Digital Filter 2.1-5
CBM 3.1-62
CCITT Q.920/Q.921 LAPD Controller 2.2-6
CCITT X.25 Protocol Controller 2.2-6
CDA (Customer Defined Arrays) 1.1-1, 1.1-4
Cell Library Elements 1.1-10
Cells, Standard 1.0-1, 1.1-10
Clipper Transient Voltage Suppressors 5.2-10
Clocks, Real-Time 2.5-3
Closed-Loop Brushless Motor Adapter 4.3-5
CMMU (Cache/Memory Management Units) 2.3-3
CMOS 3.1-2, 3.1-36
CMOS Arrays 1.1-1, 1.1-3
Communication Circuits 4.7-2
Communications Bus Transceivers 4-43
Communications Bus Transceivers 4.6-5
Communications Controllers 2.2-5
Compact Development Systems 2.4-15
Compact Development Tools for AMCU 2.4-14
Comparators 4.1-9
Consumer Electronic Circuits 4.8-2
Control Circuits, Power/Motor 4.3-2
Controllers, Communications 2.2-5
Controllers, Current Mode 4.2-9
Controllers, Direct Memory Access (DMAC) 2.2-5
Controllers, Double-Ended 4.2-8
Controllers, Dual Data Link, ISDN 4.7-10
Controllers, Enhanced Embedded 2.2-3
Controllers, Floppy Disk 2.5-2
Controllers, Floppy Disk Write 4.6-2
Controllers, Interface 2.2-6
Controllers, Media Access 2.2-8
Controllers, Microprocessor Power Supply 4.2-9
Controllers, Motor 4.3-4
Controllers, Motor Speed 4.3-7
Controllers, Multifunction I/O 2.5-4
Controllers, Power 4.3-2
Controllers, Protocol 2.2-6
Controllers, Single-Ended 4.2-6
Controllers, Switching Regulator 4.2-6
Controllers, Triac Phase Angle 4.3-7
Controllers, Zero Voltage 4.3-3
Converters, Analog-to-Digital 2.1-5,4.5-2
Coprocessors 2.2-5
Crosspoint Switches 4.7-7
Crowbar (Overvoltage) Sensing Circuit 4.2-10
CRT Deflection Transistors 5.3-35
CSIC (Customer-Specified Integrated Circuits) 2.4-9
CSIC Microcontrollers 2.4-1,2.4-9
Customer Defined Arrays (CDA) 1.1-1, 1.1-4
Customer-Specified Integrated Circuits (CSIC) 2.4-9
CVSD Modulator/Demodulator 4.7-21

SUBJECT INDEX

Subject	Page

D

D2PAK 5.3-8
Data Communications Devices 2.2-7
Data Conversion 4.5-2
Data Converters 2.4-13,
Data Set Interface Circuit (DSI) 4.7-12
DC Motor Controllers 4.3-4
DC Servo Motor Controller/Driver 4.3-6
DDMA (Dual Direct Memory Access Controller) ... 2.2-5
Design-In Software Packages 2.1-7,2.2-8
Detectors 5.6-10
Development Tools 2.2-8
Dial Circuits 4.7-13
Digital Cells 1.1-10
Digital Signal Processors 2.1-1
Digital-to-Analog Converters 4.5-3
Direct Memory Access Controllers (DMAC) 2.2-5
Discrete Power Transistors 5.3-1
Discrete Products 5.0-1
Display Decoders/Drivers 2.4-13
Display Drivers/Decoders 4.6-8
DMA Controllers 2.2-5
DMAC (Direct Memory Access Controllers) 2.2-5
Double-Ended Controllers 4.2-8
DPAK 5.3-8, 5.3-25, 5.4-3, 5.4-8
DRAM Modules 2.7-5
DRAMs (Dynamic Random-Access Memories) ... 2.7-4
Driver Switch, High-Side 4.3-3
Driver/Receivers 2.5-4
Drivers, Line 4.6-6
Drivers, Peripheral 4.6-7
Drivers/Decoders, Display 4.6-8
DSI (Data Set Interface Circuit) 4.7-12
DSP (Digital Signal Processors) 2.1-1
DSP Application Development Systems 2.1-6
DSP Development Support 2.1-6
DSP Development Tools 2.1-6
DSP Peripherals 2.1-5
DSP Software Packages 2.1-7
DSP56000 - 24-bit Digital Signal Processors 2.1-3
DSP56100 - 16-bit Digital Signal Processors 2.1-2
DSP56200 - The Cascadable Adaptive Finite Impulse Response Digital Filter 2.1-5
DSP56ADC16-The Analog-to-Digital Converter 2.1-5,4.5-2
DSP96000 - 32-bit IEEE Floating Point Dual-Port Processors 2.1-4
Dual Comparators 4.1-9
Dual Data Link Controller, ISDN 4.7-10
Dual Direct Memory Access Controller (DDMA) ... 2.2-5
Dual Operational Amplifier/Comparators 4.1-8
Dual Operational Amplifiers 4.1-4
Dual Tone Multiple Frequency Receiver 4.7-7
Dual Universal Asynchronous Receiver/ Transmitter (DUART) 2.2-7
Dual-Port Processors 2.1-4
DUART (Dual Universal Asynchronous Receiver/Transmitter) 2.2-7
Dynamic RAM Modules 2.7-5
Dynamic RAMs (DRAMs) 2.7-4
D-A Converters 4.5-3

E

E.M.S. Modules 5.3-38
E.S.D. (Electrostatic Transient Volt. Suppressors) 5.2-10
ECL 3.1-3
ECLinPS 3.1-34
Elasticity Buffer and Link Manager 2.2-7
Electronic Telephone Circuits 4.7-13
Embossed Tape and Reel 5.10-1
Emitters/Detectors 5.6-10
Energy Management Series 5.3-38
Enhanced Embedded Controllers 2.2-3
Enhanced Floating Point Coprocessors 2.2-5
Enhanced Peripheral Comm. Interface (EPCI) 2.2-7
Entertainment Radio Receiver Circuits 4.8-2
EPCI (Enhanced Peripheral Comm. Interface) 2.2-7
Evaluation Boards 2.4-14
Evaluation Modules 2.4-14,2.4-15
Evaluation System, Microprocessor 2.2-8
Evaluation Systems/Kits 2.4-14,2.4-15
EVS (Evaluation System) 2.2-8

F

FACT 3.1-46
FACT CMOS 3.1-37
FACT TTL Compatible 3.1-48
FAST 3.1-26
Fast Recovery Rectifiers 5.4-10
Fast Static RAM Modules 2.7-3
Fast Static RAMs (FSRAMs) 2.7-2
FDDI (Fiber Distributed Data Interface) 2.2-7
FDDI Chip Set 2.2-8
FDDI Clock Generator 2.2-7
FDDI System Interface 2.2-8
FETs 5.1-19
Fiber Distributed Data Interface (FDDI) 2.2-7
Fiber Optic Components 5.6-12
Field-Effect Transistors (FETs) 5.1-19
Filters, Telecommunications 4.7-6
FIR Filter 2.1-5
Floating Point Coprocessors 2.2-5
Floating Point Dual-Port Processors 2.1-4
Floppy Disk Controller 2.5-2
Floppy Disk Read Amplifier System 4.6-3
Floppy Disk Write Controllers 4.6-2
Footprints, Discrete 5.11-1
Frequency Synthesizers, PLL 2.4-13,4-68
Frequency Synthesizers, PLL 4.7-22
FSRAMs (Fast Static RAMs) 2.7-2

SUBJECT INDEX

Subject **Page**

G

Gate Arrays 1.0-1, 1.1-1
General Purpose 5.2-10
General Purpose I/O 2.2-7
General Purpose Rectifiers 5.4-13
General Static RAMs 2.7-3

H

Hardware Development Tools for AMCU 2.4-14
Hardware Development Tools for CSIC 2.4-15
HDC Arrays 1.1-3
High Frequency Amplifiers 4.1-7
High Speed CMOS 3.1-36
High Speed Dual Drivers 4.2-13
High Speed TTL Compatible Devices 3.1-45
High-Side Driver Switch 4.3-3
Hot-Carrier (Schottky) Diodes 5.1-32
HTD/DTL Circuits 3.1-54

I

ICePAK Products 5.3-10
IGBTs (Insulated Gate Bipolar Transistors) 5.3-40
Ignition Circuit, Automotive 4.9-2
IMP (Integrated Multiprotocol Processor) 2.2-4
Infrared Emitting Diodes 5.6-10
Instrumentation Bus Transceivers 4.6-5
Insulated Gate Bipolar Transistor 5.3-11, 5.3-40
Integrated Multiprotocol Processors (IMP) 2.2-4
Integrated Processor With DMA (IPD) 2.2-4
Integrated Processors 2.2-4
Integrated Svcs. Digital Network (ISDN) 2.2-4,2.2-6,4.7-9
Interface Controllers 2.2-6
Interface Integrated Circuits 4.0-1, 4.6-1
IPD (Integrated Processor with DMA) 2.2-4
ISDN (Integrated Services Digital Network) . . 2.2-4,2.2-6
ISDN Voice/Data Circuits 4.7-9
Isolated TRIAC Mold Type 5.5-2

J

JFETs 5.1-19

L

LAPB Protocol Controller 2.2-6
LAPD Protocol Controller 2.2-6
LCD Drivers 4.6-8
Lead Tape Packaging Standards for Axial-Leaded
Components 5.10-5
Leadforms, ICePAK 5.9-3
Leadforms, TO-220 . . . . . 5.9-1
LED Drivers 4.6-8
Line Drivers 4.6-6
Line Receivers 4.6-5
Line Transceivers 4.6-6

Subject **Page**

Linear Integrated Circuits 4.0-1
Linear Transistors 5.8-16
Linear Voltage Regulators 4.2-2
Local Talk Adaptor 2.2-6
Logic Level Power MOSFETs 5.3-7
LON Products 2.6-1
LonBuilder Developer's Workbench 2.6-4
LonBuilder Starter Kit 2.6-4
Low Power HCMOS 8-/16-/32-Bit Microprocessor . 2.2-4
LS - Low Power Schottky 3.1-21

M

M6801 Family - 8-Bit, HMOS 2.4-8
M6804 Family (HMOS) 2.4-11
M6805 Family (HMOS) 2.4-11
M68300 Modular Microcontroller Family -
32-Bit, HCMOS 2.4-2
M68HC05 Family - 8-Bit, HCMOS 2.4-9
M68HC11 Family - 8-Bit, HCMOS 2.4-5
M68HC16 Modular Microcontroller Family -
16-Bit, HCMOS 2.4-2
M88000 RISC Family 2.3-1
Magnetic Read/Write Interface and Control Circuits 4.6-2
Magnetic Tape Sense Amplifiers 4.6-3
MCA Arrays 1.1-2
MCUs (Microcontrollers) 2.4-1
MDA Standard Cell Families 1.1-12
MECL 3.1-29
MECL 10H 3.1-32
MECL 10K 3.1-30
MECL III 3.1-53
Media Access Controller 2.2-8
Medium Power MOSFETs 5.3-9
MEGAHERTZ Series 5.4-2
Memories, MOS 2.7-1
Memory Management Units (MMU) 2.2-5
Memory Modules 2.7-3,2.7-5
Memory Support 3.1-53
Metal Gate CMOS 3.1-36
Metal-Can Transistors 5.1-16
MFP (Multifunction Peripheral) 2.2-7
Microcomputer Components 2.0-1
Microcontrollers (MCUs) 2.4-1
Microprocessor Bus Extenders 4.6-4
Microprocessor Bus Interface Circuits 2.0-1,4-42
Microprocessor Voltage Regulator Circuit . 4.2-5, 4.2-12
Microprocessors 2.2-1,2.3-2
Microwave Transistors, RF 5.8-12
MMU (Memory Management Units) 2.2-5
Modem/Filter 4.7-19
Modems 2.2-6
Modulator/Demodulator, Balanced, RF 4.7-3
Modulator/Demodulator, CVSD 4.7-21
Modulator/Demodulators 2.2-6
Modules, Memory 2.7-3,2.7-5

SUBJECT INDEX

Subject	Page
Modules, Power	5.3-36
MOS Memories	2.7-1
MOSFET Drivers	4.2-13
MOSFET Turn-off Devices	5.3-13
MOSFETs	5.1-21, 5.3-3
Mosorb(TM) (See Transient Voltage Suppressors)	5.2-10
Motor Control Circuits	4.3-4
Motor Speed Controller	4.3-7
Motorola Device Classifications	5.0-2
Motorola Preferred Device Types	5.0-2
MPU Peripherals	2.2-8
MPUs (Microprocessors)	2.2-1
Multi-Link LAPD Controller	2.2-6
Multi-Link LAPD Controller CCITT Q.920/Q.921, LAPD	2.2-6
Multifunction I/O Controllers	2.5-4
Multifunction Peripheral (MFP)	2.2-7
Multiple Chip Products (TMOS)	5.3-9,5.3-10
Multiple Switching Diodes	5.1-36
Multiple Transistors	5.1-8
Multipliers, Linear	4.10-2
MUSCLE Mixed-Mode Unified Scalable Cell Lib.	1.1-10

N

Subject	Page
Narrowband Communications Circuits	4.7-2
Network Devices	2.2-5
Neuron Chips	2.6-2
New C-Compiler Packages	2.1-7

O

Subject	Page
OACS (Open Architecture CAD System)	1.1-1, 1.1-5, 1.1-6
One-Time Programmable and Reprogrammable MCUs	2.4-8,2.4-11
One-Time Programmable/Emulator MCUs	2.4-11
Open Architecture CAD System (OACS)	1.1-1, 1.1-5, 1.1-6
Operational Amplifier/Comparators	4.1-8
Operational Amplifiers	4.1-2
Optically Isolated Driver/Triac Combinations	5.5-24
Optoelectronic Chips	5.6-15
Optoelectronic Devices	5.6-1
Optointerrupters	5.6-11
Optoisolators	5.6-2
OTP (One-Time Programmable) MCUs	2.4-8,2.4-11
Outline Dimensions, Discrete	5.11-1
Overvoltage ÒCrowbar" Sensing Circuit	4.2-10
Overvoltage Protection Circuit	4.2-10

P

Subject	Page
Packaging Specifications, Discrete	5.10-1
Paged Memory Management Unit (PMMU)	2.2-5
Parallel Interface/Timer (PI/T)	2.2-7
PBX Circuits	4.7-6
PC Peripheral Products	2.5-1
PCM Mono-Circuit Codec-Filters	4.7-6
Peripheral Drivers	4.6-7
Phase Angle Controller, Triac	4.3-7
Phased-Locked Loop	3.1-50
Phase-Locked Loop Components	4.7-22
Photo Schmitt Triggers	5.6-10
Photo Triac Drivers	5.6-10
Photodarlingtons	5.6-10
Photodiodes	5.6-10
Phototransistors	5.6-10
PI/T (Parallel Interface/Timer)	2.2-7
Plastic-Encapsulated Multiple Transistors	5.1-8
Plastic-Encapsulated Surface Mount Transistors	5.1-10
Plastic-Encapsulated Transistors	5.1-2
PLL Frequency Synthesizers	2.4-13,4-68
PLL Frequency Synthesizers	4.7-22
PMMU (Paged Memory Management Unit)	2.2-5
Power Controllers	4.3-2
Power Modules (Energy Management Series)	5.3-38
Power Supervisory Circuits	4.2-10
Power Supply Circuits	4.2-2
Power Transistor Products	5.3-1
Power/Motor Control Circuits	4.3-2
Precision Low Voltage References	4.4-2
Preferred Device Types	5.0-2
Pressure Sensors	5.7-2
Processors, Integrated	2.2-4
Programmable Logic Arrays	1.1-10
Programmable Operational Amplifiers	4.1-8
Programmable Unijunction Transistors (PUT)	5.5-25
Programmer Boards	2.4-14,2.4-15

Q

Subject	Page
Quad Comparators	4.1-9
Quad Operational Amplifiers	4.1-8

R

Subject	Page
RAMs (Random-Access Memories)	2.7-1
Random-Access Memories (RAMs)	2.7-1
Real-Time Clocks	2.5-3
Receiver, Dual Tone Multiple Frequency	4.7-7
Receivers, Line	4.6-5
Receptacle Mounted Fiber Optic Transmitter and Receiver Components	5.6-14
Rectifiers	5.4-1
References, Voltage	4.4-2
References, Voltage	5.2-9
Regulators, Voltage	5.2-2
Remote Control Circuits	4.8-6, 4.10-3
Repertory Dialers	4.7-13
Reprogrammable MCUs	2.4-8
RF Amplifiers	5.8-31
RF Chips	5.8-33
RF Communications Circuits	4.7-2

SUBJECT INDEX

Subject	Page
RF Discrete Transistors	5.8-3
RF Power Bipolar Transistors	5.8-5
RF Power TMOS FETs	5.8-3
RF Products	5.8-1
RF Small-Signal Bipolar Transistors	5.8-20
RISC Microprocessors	2.3-1

S

Subject	Page
S/T-Interface Transceivers	4.7-9
SBS (Silicon Bidirectional Switch)	5.5-25
SCANSWITCH Series	5.4-2
Schottky Rectifiers	5.4-3
SCRs (Silicon Controlled Rectifiers)	5.5-2
SCSI Bus Terminator	3.1-52
SCSI Devices	2.5-4
Secondary Cache Controller	2.3-3
Semicustom Circuits	1.0-1
SENSEFETs Products	5.3-7
Sensors	5.7-1
Serial Peripheral Interface (SPI)	2.4-13
Servo Motor Controller/Driver	4.3-6
SIDACs	5.5-25
Silicon Bidirectional Switch (SBS)	5.5-25
Silicon Controlled Rectifiers (SCRs)	5.5-2
Silicon Photodetectors	5.6-10
Silicon Temperature Sensors	5.7-9
Single-Chip Microcontrollers (MCUs)	2.4-1
Single-Ended Controllers	4.2-6
SLIC (Subscriber Loop Interface Circuits)	4.7-8
Small-Signal Plastic-Encapsulated Transistors	5.1-2
SMALLBLOCK Products	5.3-13
Small-Signal Transistors, FETs and Diodes	5.1-1
SMARTDISCRETES Products	5.3-12
Smoke Detector Circuits	4.10-4
Software Development Tools	2.4-16
Software Packages	2.1-7,2.2-8
Solenoid Driver, Integrated	4.3-3
SOTs (Small Outline Transistors Packages)	5.1-1, 5.3-13, 5.8-1
Speakerphone Circuits	4.7-16
Special Logic Circuits	3.1-50
Speech Networks	4.7-15
SPI (Serial Peripheral Interface)	2.4-13
SRAMs (Static RAMs)	2.7-2
Standard 14000 Series	3.1-38
Standard Bipolar Logic Integrated Circuits	
Standard Cells	1-1,1-11
Standard Cells	1.0-1, 1.1-10
Static RAMs (SRAMs)	2.7-2
Stepper Motor Driver	4.3-6
Subscriber Loop Interface Circuits (SLIC)	4.7-8
Supervisory Circuits, Power	4.2-10
Support Software	2.1-7,2.2-8
Support Software	2.2-8
Surface Mount	5.2-18
Surface Mount	5.2-7
Surface Mount Bipolar	4.11-2
Surface Mount Linear and Interface Circuits	4.11-2
Surface Mount MOS Digital-Analog	4.11-6
Surface Mount, Discrete	5.1-10, 5.2-7, 5.2-18, 5.3-8, 5.3-25, 5.4-3, 5.4-8, 5.6-7, 5.8-1
Surge Suppressors	5.2-10
Switches, Crosspoint	4.7-7
Switches, Zero Voltage	4.3-2
Switching Diodes	5.1-33
Switching Regulator Control Circuits	4.2-6
SWITCHMODE Products	5.4-3, 5.4-8

T

Subject	Page
Tape and Reel Specifications, Discrete	5.10-1
Tapes and Reel	3.1-62
TBC (Token Bus Controller)	2.2-5
Telecommunications	4.7-6
Telephone Accessory Circuits	4.7-18
Telephone Circuits	4.7-13
Temperature Compensated Reference Diodes (TC)	5.2-9
Temperature Sensors	5.7-9
The M68000 MPU Family	2.2-1
Thyristors	5.5-1
Thyristors and Triggers	5.5-1
Timing Circuits	4.10-2
TMOS Medium Power MOSFETs	5.3-9
TMOS Power MOSFET Numbering System	5.3-2
TMOS Power MOSFETs	5.3-3
TMOS Products	5.3-1
TO-92 Radial Tape Reel or Ammo Pack	5.10-6
Token Bus Controller (TBC)	2.2-5
Tone Ringers	4.7-14
Tracking Regulator	4.2-5
Transceiver, U-Interface	4.7-9
Transceivers, Bus	4.6-5
Transceivers, Line	4.6-6
Transceivers, S/T-Interface	4.7-9
Transceivers, Universal Digital Loop	4.7-11
Transcoder, ADPCM	4.7-19
Transient Voltage Suppressors (TVS)	5.2-10
Translators	3.1-52
Triac Drivers	5.5-24
Triac Phase Angle Controller	4.3-7
TRIACs	5.5-11
Triacs, Optically Isolated	5.5-24
Triggers, Thyristor	5.5-25
TTL	3.1-20, 3.1-1
Tuning Diodes	5.1-24
TV Transmitters, RF	5.8-34
TVS (Transient Voltage Suppressors)	5.2-10
Twisted-Pair Modem	2.2-6

U

Subject	Page
U-Interface Transceiver EValuation Kit	4.7-10
UART (See DUART)	2.2-7
UDLT (Universal Digital Loop Transceiver)	4.7-11
UHF and Microwave Oscillators, RF	5.8-28

SUBJECT INDEX

Subject	Page
UHF Transistors, RF	5.8-9
Ultrafast Recovery Rectifiers	5.4-8
Undervoltage Protection Circuit	4.2-10
Undervoltage Sensing Circuit	4.2-11
Universal Voltage Monitor	4.2-12
U-Interface Transceiver	4.7-9

V

Subject	Page
VHF Transistors, RF	5.8-6
Video Amplifiers	4.1-8
Video Circuits	4.8-3
Virtual-Memory Microprocessors	2.2-4
Voice/Data Communication	4.7-9, 4.7-11
Voltage Reference Diodes	5.2-9
Voltage References	4.4-2
Voltage Regulator Diodes	5.2-2
Voltage Regulators, Automotive	4.9-2
Voltage Regulators, Linear	4.2-2

W

Subject	Page
Wideband Communications Circuits	4.7-2

X

Subject	Page
X.25 Protocol Controller (XPC)	2.2-6
XPC (X.25 Protocol Controller)	2.2-6
X-Ducer	5.7-4

Z

Subject	Page
Zener	5.2-1
Zener Transient Voltage Suppressors	5.2-10
Zener Voltage Reference Diodes	5.2-9
Zener Voltage Regulator Diodes	5.2-2
Zero Temperature Compensated Reference Diodes (0TC)	5.2-9
Zero Voltage Controller	4.3-3
Zero Voltage Switches	4.3-2

Subject	Page
16-Bit Microcontrollers (MCUs)	2.4-2
16-Bit Microprocessors (MPUs)(see also MCUs)	2.2-4
16-Kilobyte Cache/Memory Management Unit (CMMU)	2.3-3
2-Wire Universal Digital Loop Transceiver (UDLT)	4.7-11
32-Bit Microcontrollers (MCUs)	2.4-2
32-Bit Microprocessors (MPUs)(see also MCUs)	2.2-2
32-Bit RISC Microprocessor	2.3-2
64K-Byte Cache/Memory Management Unit (CMMU)	2.3-3
8-Bit Microcontrollers (MCUs)	2.4-5
8-Bit Microprocessors (MPUs)(see also MCUs)	2.2-4

Sales Offices and Distributors

In Brief . . .

Motorola's vast network of sales offices and distributors, augmented by manufacturing centers throughout the world, not only insures easy communications, cost-effective pricing and rapid service, but guarantees a continuing stream of state-of-the-art products based on worldwide experience and demand.

This section identifies for you the Motorola North American Distributors, European Distributors, and Worldwide Sales Offices and their phone numbers.

The information contained in this section is accurate to the date of publication.

Page

Sales and Distributors Listing 9.1-1

MOTOROLA DISTRIBUTOR AND WORLDWIDE SALES OFFICES

AUTHORIZED NORTH AMERICAN DISTRIBUTORS

UNITED STATES:

ALABAMA

Huntsville
- Arrow/Schweber Electronics (205)837-6955
- Future Electronics (205)830-2322
- Hall-Mark Electronics (205)837-8700
- Hall-Mark Electronics (205)837-8700
- Time Electronics (205)721-1133

Arizona

Chandler
- Hamilton/Avnet Electronics (602)961-0836

Phoenix
- Future Electronics (602)968-7140
- Hall-Mark Electronics (602)437-1200
- Wyle Laboratories (602)437-2088

Tempe
- Arrow/Schweber Electronics (602)431-0030
- Bell Industries (602)966-7800
- Time Electronics (602)967-2000

CALIFORNIA

Agoura Hills
- Bell Industries (818)879-9494
- Time Electronics Corporate (818)707-2890

Belmont
- Richardson Electronics (415)592-9225

Calabassas
- Arrow/Schweber Electronics (818)880-9686
- Wyle Laboratories (818)880-9000

Chatsworth
- Future Electronics (818)772-6240
- Hall-Mark Electronics (818)773-4500
- Time Electronics (818)998-7200

Costa Mesa
- Hamilton/Avnet Electronics (714)754-6092

Culver City
- Hamilton/Avnet Corporate (213)558-2000

Cypress
- Bell Industries (714)895-7801

Gardena
- Bell Industries (818-879-9494
- Hamilton/Avnet Electronics (213)516-6498

Irvine
- Arrow/Schweber Electronics (714)587-0404
- Future Electronics (714)250-4141
- Hall-Mark Electronics (714)727-6000
- Wyle Laboratories Corporate (714)851-9953
- Wyle Laboratories (714)863-9953

Los Angeles
- Bell Industries Corporate (213)826-6778

Mountain View
- Richardson Electronics (415)960-6900

Rocklin
- Bell Industries (916)652-0414
- Hall-Mark Electronics (916)624-9781

Sacramento
- Hamilton/Avnet Electronics (916)925-2216
- Wyle Laboratories (916)638-5282

San Diego
- Arrow/Schweber Electronics (619)565-4800
- Future Electronics (619)278-5020
- Hall-Mark Electronics (619)268-1201
- Hamilton/Avnet Electronics (619)571-8730
- Wyle Laboratories (619)565-9171

San Jose
- Arrow/Schweber Electronics (408)441-9700
- Arrow/Schweber Electronics (408)428-6400
- Future Electronics (408)434-1122
- Hall-Mark Electronics (408)432-4000

Santa Clara
- Wyle Laboratories (408)727-2500

Sunnyvale
- Bell Industries (408)734-8570
- Hamilton/Avnet Electronics (408)743-3300
- Time Electronics (408)734-9888

Torrance
- Time Electronics (310)320-0880

Tustin
- Time Electronics (714)669-0100

Woodland Hills
- Hamilton/Avnet Electronics (818)594-0404
- Richardson Electronics (615)594-5600

COLORADO

Broomfield
- Future Electronics (303)421-0123

Englewood
- Arrow/Schweber Electronics (303)799-0258
- Hall-Mark Electronics (303)790-1662
- Hamilton/Avnet Electronics (303)740-1000
- Time Electronics (303)721-8882

Thornton
- Wyle Laboratories (303)457-9953

Denver
- Bell Industries (303)691-9010

CONNECTICUT

Bethel
- Future Electronics (203)743-9594

Cheshire
- Hall-Mark Electronics (203)271-2844

Danbury
- Hamilton/Avnet Electronics (203)743-6077

Southbury
- Time Electronics (203)271-3200

Wallingfort
- Arrow/Schweber Electronics (203)265-7741

FLORIDA

Altamonte Springs
- Future Electronics (407)767-8414

Casselberry
- Hall-Mark Electronics (407)830-5855

Clearwater
- Future Electronics (813)530-1222
- Hall-Mark Electronics (813)541-7440

Deerfield Beach
- Arrow/Schweber Electronics (305)429-8200

Ft. Lauderdale
- Hamilton/Avnet Electronics (305)767-6377
- Time Electronics (305)484-1778

Lake Mary
- Arrow/Schweber Electronics (407)333-9300

Orlando
- Hamilton/Avnet Electronics (407)628-3888
- Time Electronics (407)841-6565

Pompano Beach
- Hall-Mark Electronics (305)971-9280

St. Petersburg
- Hamilton/Avnet Electronics (813)573-3930
- Time Electronics (407)841-6565

Winter Park
- Richardson Electronics (407)644-1453

GEORGIA

Atlanta
- Time Electronics (404)351-3545

Duluth
- Arrow/Schweber Electronics (404)497-1300
- Hall-Mark Electronics (404)623-4400
- Hamilton/Avnet Electronics (404)446-0611

Norcross
- Future Electronics (404)441-7676
- Time Electronics (404)368-0969

ILLINOIS

Bensenville
- Hamilton/Avnet Electronics (708)860-7700

Chicago
- Newark Electronics Corp. (312)784-5100

Elk Grove Village
- Bell Industries (708)640-1910

Hoffman Estates
- Future Electronics (708)882-1255

Itasca
- Arrow/Schweber Electronics (708)250-0500

LaFox
- Richardson Electronics (708)208-2401

Schaumburg
- Time Electronics (708)303-3000

Urbana
- Bell Industries (317)875-8200

Wooddale
- Hall-Mark Electronics (708)860-3800

INDIANA

Fort Wayne
- Bell Industries (219)423-3422

Indianapolis
- Arrow/Schweber Electronics (317)299-2071
- Bell Industries (317)875-8200
- Hall-Mark Electronics (317)872-8875
- Hamilton/Avnet Electronics (317)844-9333
- Time Electronics (708)303-3000

IOWA

Cedar Rapids
- Hamilton/Avnet Electronics (319)362-4757
- Time Electronics (314)391-6444

KANSAS

Lenexa
- Arrow/Schweber Electronics (913)541-9542
- Hall-Mark Electronics (913)888-4747

Overland Park
- Hamilton/Avnet Electronics (913)888-8900
- Time Electronics (314)391-6444

MARYLAND

Columbia
- Arrow/Schweber Electronics (301)596-7800
- Future Electronics (301)290-0600
- Hall-Mark Electronics (301)988-9800
- Hamilton/Avnet Electronics (301)995-3500
- Time Electronics (301)964-3090

MASSACHUSETTS

Billerica
- Hall-Mark Electronics (508)667-0902

Boston
- Arrow/Schweber Electronics (508)658-0900
- Hamilton/Avnet Electronics (508)531-7430

Bolton
- Future Corporate (508)779-3000

Burlington
- Wyle Laboratories (617)272-7300

Norwell
- Richardson Electronics (617)871-5162

Peabody
- Time Electronics (508)532-9900

MICHIGAN

Grand Rapids
- Hamilton/Avnet Electronics (616)243-8805

Livonia
- Arrow/Schweber Electronics (313)462-2290
- Future Electronics (313)261-5270
- Hall-Mark Electronics (313)462-1205
- Hamilton/Avnet Electronics (313)347-4270
- Time Electronics (614)794-3301

Wixon
- Bell Industries (800)582-7492

MINNESOTA

Eden Prairie
- Arrow/Schweber Electronics (612)941-5280
- Future Electronics (612)944-2200
- Hall-Mark Electronics (612)881-2600
- Time Electronics (612)943-2433

Minneapolis
- Hamilton/Avnet Electronics (612)932-0600

MISSOURI

Earth City
- Hall-Mark Electronics (314)291-5350
- Hamilton/Avnet Electronics (314)537-1600

St. Louis
- Arrow/Schweber Electronics (314)567-6888
- Future Electronics (314)469-6805
- Time Electronics (314)391-6444

NEW HAMPSHIRE

Manchester
- Hamilton/Avnet Electronics (603)624-9400

NEW JERSEY

Cherry Hill
- Hamilton/Avnet Electronics (609)424-0100

Fairfield
- Future Electronics (201)299-0400

Marlton
- Arrow/Schweber Electronics (609)596-8000
- Future Electronics (609)778-7600

Mount Laurel
- Hall-Mark Electronics (609)235-1900

Pinebrook
- Arrow/Schweber Electronics (201)227-7880

Parsippany
- Hall-Mark Electronics (201)515-3000
- Hamilton/Avnet Electronics (201)575-3390

Wayne
- Time Electronics (201)785-8250

NEW MEXICO

Albuquerque
- Alliance Electronics (505)292-3360
- Bell Industries (505)292-2700
- Hamilton/Avnet Electronics (505)345-0001

NEW YORK

Fairport
- Hall-Mark Electronics (716)425-3300

Hauppauge
- Arrow/Schweber Electronics (516)231-1000
- Future Electronics (516)234-4000
- Hall-Mark Electronics (516)737-0600
- Hamilton/Avnet Electronics (516)231-9800

Liverpool
- Future Electronics (315)451-2371

Rochester
- Arrow/Schweber Electronics (716)427-0300
- Future Electronics (716)272-1120
- Hall-Mark Electronics (716)425-3300
- Hamilton/Avnet Electronics (716)292-0730
- Richardson Electronics (716)264-1100
- Time Electronics (315)432-0355

Rockville Centre
- Richardson Electronics (516)872-4400

Syracuse
- Hamilton/Avnet Electronics (315)437-2641
- Time Electronics (315)432-0355

NORTH CAROLINA

Charlotte
- Future Electronics (704)455-9030
- Richardson Electronics (704)548-9042

Raleigh
- Arrow/Schweber Electronics (919)876-3132
- Future Electronics (919)790-7111
- Hall-Mark Electronics (919)872-0712
- Hamilton/Avnet Electronics (919)878-0810
- Time Electronics (919)693-5166

OHIO

Centerville
- Arrow/Schweber Electronics (513)435-5563

Cleveland
- Hall-Mark Electronics (216)349-4632
- Hamilton/Avnet Electronics (216)349-5100
- Time Electronics (614)794-3301

Columbus
- Hamilton/Avnet Electronics (614)882-7004
- Time Electronics (614)794-3301

Dayton
- Bell Industries (513)435-8660
- Hamilton/Avnet Electronics (513)439-6700
- Time Electronics (614)794-3301

Mayfield Heights
- Future Electronics (216)449-6996

Solon
- Arrow/Schweber Electronics (216)248-3990

Toledo
- Hamilton/Avnet Electronics (419)242-6610

Worthington
- Hall-Mark Electronics (614)888-3313

AUTHORIZED DISTRIBUTORS — continued

UNITED STATES (cont'd):

OKLAHOMA
Tulsa
Hall-Mark Electronics (918)254-6110
Hamilton/Avnet Electronics (918)252-7297

OREGON
Beaverton
Arrow/Almac Electronics Corp. (503)629-8090
Future Electronics (503)645-9454
Hillsboro
Wyle Laboratories (503)643-7900
Lake Oswego
Bell Industries (503)644-1500
Portland
Hamilton/Avnet Electronics (503)627-0201
Time Electronics (503)626-2979

PENNSYLVANIA
Erie
Hamilton/Avnet Electronics (814)455-6767
Montgomeryville
Richardson Electronics (215)628-0805
Philadelphia
Hall-Mark Electronics (215)355-7300
Time Electronics (609)596-6700
Pittsburgh
Arrow/Schweber Electronics (412)963-6807
Hamilton/Avnet Electronics (412)281-4150
Time Electronics (614)794-3301

TENNESSEE
Franklin
Richardson Electronics (615)791-4900

TEXAS
Austin
Arrow/Schweber Electronics (512)835-4180
Hall-Mark Electronics (512)258-8848
Hamilton/Avnet Electronics (512)832-4306
Time Electronics (512)346-7346
Wyle Laboratories (512)345-8853
Carollton
Arrow/Schweber Electronics (214)380-6464
Dallas
Future Electronics (214)437-2437
Hall-Mark Corporate (214)343-5000
Hall-Mark Electronics (214)553-4300
Hamilton/Avnet Electronics (214)308-8140
Richardson Electronics (214)239-3680
Time Electronics (214)644-4644
Wyle Laboratories (214)235-9953
Ft. Worth
Allied Electronics (817)336-5401
Houston
Arrow/Schweber Electronics (713)530-4700
Future Electronics (713)556-8696
Hall-Mark Electronics (713)781-6100
Hamilton/Avnet Electronics (713)240-7898
Time Electronics (713)530-0800
Wyle Laboratories (713)879-9953

UTAH
Salt Lake City
Arrow/Schweber Electronics (801)973-6913
Bell Industries (801)255-9611
Future Electronics (801)972-8489
Hamilton/Avnet Electronics (801)972-2800
Wyle Laboratories (801)974-9953
West Valley City
Hall-Mark Electronics (801)972-1008
Time Electronics (801)973-8494

WASHINGTON
Bellevue
Almac Electronics Corp. (206)643-9992
Future Electronics (206)881-8199
Hall-Mark Electronics (206)547-0415
Richardson Electronics (206)646-7224
Redmond
Bell Industries (206)867-5410
Hamilton/Avnet Electronics (206)241-8555
Time Electronics (206)820-1525
Wyle Laboratories (206)881-1150
Spokane
Arrow/Almac Electronics Corp. (509)924-9500

WISCONSIN
Brookfield
Arrow/Schweber Electronics (414)792-0150
Milwaukee
Time Electronics (708)303-3000
New Berlin
Hall-Mark Electronics (414)797-7844
Hamilton/Avnet Electronics (414)784-4510
Waukesha
Bell Industries (414)547-8879
Future Electronics (414)786-1884

CANADA:

ALBERTA
Calgary
Electro Sonic Inc. (403)255-9550
Future Electronics (403)250-5550
Hamilton/Avnet Electronics (800)663-5500
Edmonton
Future Electronics (403)438-2858
Hamilton/Avnet Electronics (800)663-5500

BRITISH COLUMBIA
Vancouver
Arrow Electronics (604)421-2333
Electro Sonic Inc. (604)273-2911
Future Electronics (604)294-1166
Hamilton/Avnet Electronics (604)420-4101

MANITOBA
Winnipeg
Electro Sonic Inc. (204)783-3105
Future Electronics (204)786-7711
Hamilton/Avnet Electronics (800)663-5500

ONTARIO
Ottawa
Arrow Electronics (613)226-6903
Electro Sonic Inc. (613)494-1666
Future Electronics (613)820-8313
Hamilton/Avnet Electronics (613)226-1700
Toronto
Arrow Electronics (416)670-7769
Electro Sonic Inc. (416)494-1666
Future Electronics (416)612-9200
Hamilton/Avnet Electronics (416)564-6060
Richardson Electronics (416)458-5333

QUEBEC
Montreal
Arrow Electronics (514)421-7411
Future Electronics (514)694-7710
Hamilton/Avnet Electronics (514)335-1000
Richardson Electronics (514)748-1770
Quebec City
Future Electronics (418)877-6666

SALES OFFICES

UNITED STATES:

ALABAMA, Huntsville (205)830-1051
ARIZONA, Tempe (602)897-5056
CALIFORNIA, Agoura Hills (818)706-1929
CALIFORNIA, Los Angeles (213)417-8848
CALIFORNIA, Irvine (714)753-7360
CALIFORNIA, Sacramento (916)922-7152
CALIFORNIA, San Diego (619)541-2163
CALIFORNIA, Sunnyvale (408)749-0510
COLORADO, Colorado Springs (719)599-7497
COLORADO, Denver (303)337-3434
CONNECTICUT, Wallingford (203)949-4100
FLORIDA, Maitland (407)628-2636
FLORIDA, Pompano Beach/
Ft. Lauderdale (305)486-9776
FLORIDA, St. Petersburg (813)576-6035
GEORGIA, Atlanta (404)449-3875
ILLINOIS, Chicago/
Hoffman Estates (708)490-9500
INDIANA, Fort Wayne (219)436-5818
INDIANA, Indianapolis (317)571-0400
INDIANA, Kokomo (317)457-6634
IOWA, Cedar Rapids (319)373-1328
KANSAS, Kansas City/Mission (913)451-8555
MARYLAND, Columbia (301)381-1570
MASSACHUSETTS, Marlborough (508)481-8100
MASSACHUSETTS, Woburn (617)932-9700
MICHIGAN, Detroit (313)347-6800
MINNESOTA, Minneapolis (612)941-6800
MISSOURI, St. Louis (314)275-7380
NEW JERSEY, Fairfield (201)808-2400
NEW YORK, Fairport (716)425-4000
NEW YORK, Hauppauge (516)361-7000
NEW YORK, Poughkeepsie/
Fishkill (914)473-8102
NORTH CAROLINA, Raleigh (919)870-4355
OHIO, Cleveland (216)349-3100
OHIO, Columbus/Worthington (614)431-8492
OHIO, Dayton (513)495-6800
OKLAHOMA, Tulsa (800)544-9496
OREGON, Portland (503)641-3681
PENNSYLVANIA, Colmar (215)997-1020
Philadelphia/Horsham (215)957-4100
TENNESSEE, Knoxville (615)690-5593
TEXAS, Austin (512)873-2000
TEXAS, Houston (800)343-2692
TEXAS, Richardson (214)480-8100
VIRGINIA, Richmond (804)285-2100
WASHINGTON, Bellevue (206)454-4160
Seattle Access (206)622-9960
WISCONSIN, Milwaukee/
Brookfield (414)792-0122

Field Applications Engineering Available
Through All Sales Offices

CANADA:

BRITISH COLUMBIA, Vancouver (604)293-7605
ONTARIO, Toronto (416)497-8181
ONTARIO, Ottawa (613)226-3491
QUEBEC, Montreal (514)731-6881

INTERNATIONAL:

AUSTRALIA, Melbourne (61-3)887-0711
AUSTRALIA, Sydney 61(2)906-3855
BRAZIL, Sao Paulo 55(11)813-1711
or 55(11)813-1554
FINLAND, Helsinki 358(0)693 58 40
car phone 358(49)211501
FRANCE, Paris/Vanves 33(1)40 955 900
GERMANY, Langenhagen/
Hannover 49(511)789911
GERMANY, Munich 49 89 92103-0
GERMANY, Nurenberg 49 911 64-3044
GERMANY, Sindelfingen 49 7031 69 910
GERMANY, Wiesbaden 49 611 761921
HONG KONG, Kwai Chung (852)4808-333
INDIA, Bangalore (91-812)627094
ISRAEL, Tel Aviv 972(3)753-8222
ITALY, Milan 39(2)82201
JAPAN, Aizu 81(241)272231
JAPAN, Atsugi 81(0462)23-0761
JAPAN, Kumagaya 81(0485)26-2600
JAPAN, Kyushu 81(092)771-4212
JAPAN, Mito 81(0292)26-2340
JAPAN, Nagoya 81(052)232-1621
JAPAN, Osaka 81(06)305-1801
JAPAN, Sendai 81(22)268-4333
JAPAN, Tachikawa 81(0425)23-6700
JAPAN, Tokyo 81(03)3440-3311
JAPAN, Yokohama 81(045)472-2751
KOREA, Pusan 82(51)4635-035
KOREA, Seoul 82(2)554-5118
MALAYSIA, Penang 60(4)374514
MEXICO, Mexico City 52(5)207-7880
or 52(5)207-7727
MEXICO, Guadalajara 52(36)21-89-77
or 52(36)21-91-29
NETHERLANDS, Best (31)4998 612 11
PUERTO RICO, San Juan (809)793-2170
SINGAPORE (65)2945438
SPAIN, Madrid 34(1)457-8204
or 34(1)457-8254
SWEDEN, Solna 46(8)734-8800
SWITZERLAND, Geneva 41(22)799 11 11
SWITZERLAND, Zurich 41(1)730-4074
TAIWAN, Taipei 886(2)717-7089
THAILAND, Bangkok (66-2)254-4910
UNITED KINGDOM, Aylesbury 44(296)395-252

FULL LINE REPRESENTATIVES:

COLORADO, Grand Junction
Cheryl Lee Whitely (303)243-9658
KANSAS, Wichita
Melinda Shores/Kelly Greiving (316)838-0190
NEVADA, Reno
Galena Technology Group (702)746-0642
NEW MEXICO, Albuquerque
S&S Technologies, Inc. (505)298-7177
UTAH, Salt Lake City
Utah Component Sales, inc. (801)561-5099
WASHINGTON, Spokane
Doug Kenley (509)924-2322
ARGENTINA, Buenos Aires
Argonics, S.A. (541)30-2461

HYBRID COMPONENTS RESELLERS

Elmo Semiconductor (818)768-7400
Minco Technology Labs Inc. (512)834-2022
Semi Dice Inc. (213)594-4631

European Distributors

AUSTRIA

EBV Elektronik — Entire range ✔

Diefenbachgaße 35/VI, A-1150 Wien
Tel: 1 8941774 Fax: 1 8941775 Tlx: 134946 ebv w

Elbatex GmbH — Entire range ✔

Eitnergaße 6, A-1233 Wien
Tel: 1 863211 Fax: 1 863211200 Tlx: 133128 elba a

BELGIUM

Diode Belgium — Not Hi-Rel ❍

Minervastraat 14/B2, B-1930 Zaventem
Tel: 02 7254660 Fax: 02 7254511

EBV Belgium — Entire range ✔

Excelsiorlaan 35, B-1930 Zaventem
Tel: 02 7209936 Fax: 02 7208152

Rodelco Belgium — Not Hi-Rel ❍ Not RF ❑

Limburg Stirum 243, B-1780 Wemmel
Tel: 02 4600560 Fax: 02 4600271

CZECHOSLOVAKIA

Elbatex GmbH, Filialka v CSFR

Dvorecka 23, CS-147-00 Praha 4
Tel/Fax: 02 430576

DENMARK

Danelec Elektronics — Entire range ✔

Gladsaxevej 356, DK-2860 Soeborg
Tel: 039 1 690211 Fax: 039 1 690504 Tlx: 16590

Distributoren Interelko APS — Not Hi-Rel ❍

Silovej 38, DK-2690 Karlslunde
Tel: 053 140700 Fax: 053 146805

FINLAND

Field Oy — Entire range ✔

Nittylanpolku 10, SF-00620 Helsinki
Tel: 0 7571011 Fax: 0 798853 Tlx: 122022

GREECE

Comptel Ltd

20-22 George Street, GR-10682 Athens
Tel: 01 3614 300 Fax: 01 3646201 Tlx: 216246

FRANCE

LEX — Not RF ❑

62 Rue des Gemeaux, Silic 580, F-94653 Rungis Cedex
Tel: 1 49 78 49 78 Fax: 1 49 78 06 99

5 Rue Jean Zay - BP 12, F-42271 St Priest en Jarez Cedex
Tel: 16 77 93 40 40 Fax: 16 77 93 26 31 Tlx: 300 021

Immeuble St Christophe, Rue de la Frebardiere,
ZI Sud Est - F-35135 Chantepie
Tel: 16 99 41 70 44 Fax: 16 99 50 11 28 Tlx: 741 321

67 Rue Bataille, F-69008 Lyon
Tel: 16 78 76 32 38 Fax: 16 78 00 79 81 Tlx: 375 446

Centreda, Av. Didier Daurat, F-31700 Blagnac
Tel: 16 61 77 38 82 Fax: 16 61 30 01 93 Tlx: 532 103

Les Delonix, 138 Chemin du Stade, F-83140 Six-Fours
Tel: 16 94 34 23 23 Fax: 16 94 74 86 59

133 Rue Cable, F-88270 Valleroy aux Saules
Tel: 16 29 37 40 72 Fax: 16 29 37 40 75

Grange Coum, F-29870 Lannilis
Tel: 16 98 04 11 55 Fax: 16 98 04 14 51

Scientech — Not RF ❑

81 Rue P. Semard, F-92320 Chatillon/Bagneux
Tel: 1 49 65 27 50 Fax: 1 49 65 27 69 Tlx: 632 061

Centre d'Affaires Mixtes, Les Landelles,
F-35510 Cesson Sevigne
Tel: 16 99 83 98 98 Fax: 16 99 83 48 04 Tlx: 741 239

Le Chatelet, 5 Place Carnot, F-42000 St Etienne
Tel: 16 77 79 79 70 Fax: 16 77 74 10 03 Tlx: 300 921

44 Rue de la Faiencerie, F-33000 Bordeaux
Tel: 16 56 39 32 71 Fax: 16 56 43 13 91 Tlx: 571 659

SCAIB — Entire range ✔

80 Rue d'Arcueil, Silic 137, F-94523 Rungis Cedex
Tel: 1 46 87 23 13 Fax: 1 45 60 55 49 Tlx: 204 674

4 Rue du Parc, F-59110 la Madeleine (Lille)
Tel: 16 20 51 32 29 Fax: 16 20 51 40 11 Tlx: 120 755

3ter Rue de l'Hippodrome, F-44300 Nantes
Tel: 16 40 37 00 36 Fax: 16 40 37 01 04 Tlx: 711 660

8 Rue du Repos, F-69007 Lyon
Tel: 16 72 73 21 27 Fax: 16 78 69 10 80 Tlx: 380 380

Chemin des Clos. Zirst, F-38240 Meylan (Grenoble)
Tel: 16 76 90 22 60 Fax: 16 76 41 09 54 Tlx: 980 739

Rue des Charrons, BP 57,
F-31702 Blagnac Cedex (Toulouse)
Tel: 16 61 71 90 83 Fax: 16 61 30 49 87 Tlx: 530 294

EBV Elektronik — Not RF ❑

16 Rue Galilee, Cite Descartes,
F-77436 Champs sur Marne
Tel: 1 64 68 86 00 Fax: 1 64 68 27 67

GERMANY

Distron — Entire range ✔

Postfach 10 02 08, Behaimstraße 3,
W-1000 Berlin 10
Tel: 030 342 10 41 Fax: 030 341 90 03 Tlx: 185478

EBV Elektronik GmbH — Entire range ✔

Kiebitzrain 18, W-3006 Burgwedel 1
Tel: 05139 808 70 Fax: 05139 5199 Tlx: 923694

Viersener Straße 24, W-4040 Neuss
Tel: 02131 512 081 Fax: 02131 593 087 Tlx: 8517605

Schenckstraße 99, W-6000 Frankfurt 90
Tel: 069 785 037 Fax: 069 789 44 58 Tlx: 413590

Weimarstraße 48, W-7000 Stuttgart 1
Tel: 0711 619 100 Fax: 0711 613 750 Tlx: 722271
(High-Rel 0711 619 1040)

Hans-Pinsel-Straße 4, W-8013 Haar
Tel: 089 460 960 Fax: 089 464 488 Tlx: 524535

Enatechnik - A Neye GmbH — Not Hi-Rel ○

Sickingenstraße 1, W-1000 Berlin 21
Tel: 030 344 10 43/5 Fax: 030 344 95 44 Tlx: 185878

Schillerstraße 14, W-2085 Quickborn
Tel: 04106 61 20 Fax: 04106 61 22 68 Tlx: 213590

Hildesheimerstraße 31, W-3000 Hannover
Tel: 0511 81 60 38 Fax: 0511 81 60 48 Tlx: 922054

Rheinstraße 24, W-6100 Darmstadt
Tel: 06151 264 46 Fax: 06151 294 171 Tlx: 419204

Breitwiesenstraße 25, W-700 Stuttgart 80
Tel: 0711 788 970 Fax: 0711 788 97 44 Tlx: 725 5483

Henschelring 5, W-8011 Kirchheim
Tel: 089 909 99 90 Fax: 089 909 99 94 0 Tlx: 524850

Bucherstraße 100, W-8500 Nürnberg 10
Tel: 0911 347 50 Fax: 0911 347 530 Tlx: 626772

Leningraderstraße 15 (Atrium 1),
O-8010 Dresden
Tel: 003751 487 31 27/33 41 Fax: 003751 487 25 88

Ahnenweg 2, W-4000 Düsseldorf 1
Tel: 0211 303 010 Fax: 0211 303 01 30 Tlx: 8586865

Max-Stromeyer-Straße 1, W-7750 Konstanz
Tel: 07531 671 81 Fax: 07531 672 60 Tlx: 733496

Future Electronics Deutchland GmbH — Not Hi-Rel ○ Not RF ❑

Johannes-Daur-Straße 1,
W-7015 Korntal-Munchingen
Tel: 0711 830 830 Fax: 0711 830 83 83 Tlx: 5114314

Westring 216, W-4620 Castrop-Rauxel
Tel: 02305 420 51 Fax: 02305 426 14 Tlx: 5214314

Offheimerstraße 44, W-6254 Elz
Tel: 06431 530 55 Fax: 06431 544 93 Tlx: 5214314

Münchenerstraße 18, W-8043 Unterfoehring
Tel: 089 957 19 50 Fax: 089 957 19573 Tlx: 5214314

GERMANY

Jermyn GmbH — Not Hi-Rel ○

Europaallee 3, W-2000 Norderstedt
Tel: 040 528 20 41 Fax: 040 528 14 00 Tlx: 41525720

Rathelbeckstraße 282, W-4000 Düßeldorf 12
Tel: 0211 250 010 Fax: 0211 250 01 33 Tlx: 41525740

Im Dachsstück 9, W-6250 Limburg 4
Tel: 06431-5080 Fax: 06431 508 289 Tlx: 4152570

Klausner Ring 4, W-8011 Heimstetten
Tel: 089 909 90 30 Fax: 089 909 903 12 Tlx: 41525780

Stuttgarterstraße 35, W-7033 Herrenberg
Tel: 07032 203 01 Fax: 07032 203 33 Tlx: 41525770

Gibitzenhofstraße 62, W-8500 Nürnberg 70
Tel:0911 425 095 Fax: 0911 417569 Tlx: 41525785

Bayreutherstraße 8, W-1000 Berlin 30
Tel: 030 214 20 56 Fax: 030 213 23 96

Mütron Müller GmbH & Co — Not Hi-Rel ○

Segeberger Chaussee 34, W-2000 Norderstedt
Tel: 040 537 12 30 Fax: 040 537 123 50 Tlx: 2164195

Bornstraße 22, W-2800 Bremen 1
Tel: 0421 305 60 Fax: 0421 305 61 46 Tlx: 245325

Max-Planck-Straße 28, W-5030 Huerth
Tel: 02233 974020 Fax: 02233 974 0250

Sasco GmbH — Not Hi-Rel ○

Europaallee 3, W-2000 Norderstedt
Tel: 040 523 20 13 Fax: 040 523 23 78

Am Uhrturm 7, W-3000 Hannover 81
Tel: 0511 839 020 Fax: 0511 843 76 18 Tlx: 921123

Beratgerstraße 36, W-4600 Dortmund 1
Tel: 0231 179 791 Fax: 0231 172 991 Tlx: 8227826

Hainerweg 48, W-6000 Frankfurt 70
Tel: 069 610 391 Fax: 069 618 824 Tlx: 414435

Stafflenbergstraße 24, W-7000 Stuttgart 1
Tel: 0711 244 521 Fax: 0711 233 963 Tlx: 723936

Am Gansacker 26, W-7801 Umkirch/Freiburg
Tel: 07665 7018 Fax: 07665 8778 Tlx: 7722945

Hermann-Oberth-Straße 16, W-8011 Putzbrunn
Tel: 089 461 10 Fax: 089 461 12 70 Tlx: 529504

Gibitzenhofstraße 62, W-8500 Nürnberg 70
Tel: 0911 421 065 Fax: 0911 425 794 Tlx: 623097

Spoerle Electronic — Not Hi-Rel ○

Hans-Bunte-Straße 2, W-7800 Freiburg
Tel: 0761 510 450 Fax: 0761 502 233 Tlx: 7721994

Rudowerstraße 27-29, W-1000 Berlin 47
Tel: 030 606 011 Fax: 030 601 40 57 Tlx: 186029

Winsbergring 42, W-2000 Hamburg 54
Tel: 040 853 13 40 Fax: 040 853 134 91 Tlx: 2164536

Hildebrandstraße 11, W-4600 Dortmund 13
Tel: 0231 218 010 Fax: 0231 218 0167 Tlx: 822555

GERMANY

Spoerle Electronic (Continued) Not Hi-Rel ❍

Max-Planck-Straße 1-3,
W-6072 Dreieich 1 bei Frankfurt/Main
Tel: 06103 3040 Fax: 06103 304 201 Tlx: 417972

Höpfigheimerstraße 5,
W-7120 Bietigheim-Bissingen
Tel: 07142 700 30 Fax: 07142 700 360 Tlx: 724287

Föhringer Allee 17, W-8043 Unterföhring
Tel: 089 950 990 Fax: 089 950 99 99 Tlx: 5216379

Rathsbergstraße 17, W-8500 Nürnberg 10
Tel: 0911 521 560 Fax: 0911 521 56 35 Tlx: 622996

Kackertstraße 10, W-5100 Aachen 1
Tel: 0241 810 32 Fax: 0241 811 62

Rodeweg 18, W-3400 Göttingen
Tel: 0551 9040 Fax: 0551 904 46/48 Tlx: 96733

Thomas-Kirchhof 22, O-7010 Leipzig
Tel: 041 281 838/49 Fax: 041 281 772

NETHERLANDS

Diode Nieuwegein Not Hi-Rel ❍

Coltbaan 17, NL-3439 NG Nieuwegein
Tel: 03402 91234 Fax: 03402 35924

Diode Veldhoven Not Hi-Rel ❍

Meieryweg 3, NL-5502-HN Veldhoven
Tel: 040 545430 Fax: 040 535540

EBV Holland Entire range ✔

Planetenbaan 2, NL-3606 AK Maarssenbroek
Tel: 03465 62353 Fax: 03465 64277

Rodelco Holland Not Hi-Rel ❍ Not RF ❑

Takkebysters 2, NL-4802 HV Breda
Tel: 076 784911 Fax: 076 710029

NORWAY

Nortec Electronics A/S Entire range ✔

Smedsvingen 4, Valstad, N-1364
Tel: 0284 6210 Fax: 0284 6545

POLAND

Elbatex GmbH, Oddzial w Warszawie

ul. Hoza 29/31 m6, PL-00-681 Warszawa
Tel: 022 216531 Fax: 022 553434

RUSSIA

Soninfo, Joint Venture USSR–France

a/b Nb 19, SU-103220 Moskva
Tel: 095 3670772 Fax: 095 1660818

ITALY

Adelsi SpA Not Hi-Rel ❍

c/o International Business Service, Via Giardini 464F,
Direzionale 70, I-41100 Modena
Tel: 059 356262 Fax: 059 352202

Via San Francesco d'Assisi 6, I-00043 Ciampino - Roma
Tel: 06 7924666 Fax: 06 7924667

Corso Matteotti 32, I-10121 Torino
Tel: 011 543175 Fax: 011 533430

Via Novara 570, I-20153 Milano
Tel: 02 3580641 Fax: 02 38002988

Via Colotti 10, I-35100 Padova
Tel: 049 617561 Fax: 049 617014

Via Leoncavallo 7, I-40137 Bologna
Tel: 051 6236087 Fax: 051 6236087

Celdis Componenti SRL Entire range ✔

c/o Richter Italia S.N.C., Piazza Marini 20/10,
I-16033 Lavagna
Tel: 0185 301100 Fax: 0185 303100

Via Fulvio Testi 280, I-20126 Milano
Tel: 02 66104300 Fax: 02 66104275

c/o ESA SRL, Via Savelli 15, I-35100 Padova
Tel: 049 772719 Fax: 049 774152

Via Rainaldi 5, I-40139 Bologna
Tel: 051 541210 Fax: 051 546520

Scale 'E' Interno 103, Centro Direz. Benelli,
Via Mario del Monaco 16, I-61100 Pesaro
Tel: 0721 26560 Fax: 0721 400896

Via Tevere 80/3, I-50019 Osmannoro, Sesto Fiorentino
Tel: 055 318083 Fax: 055 318341

Via Valmarana 63, I-00139 Roma
Tel: 06 8861151 Fax: 06 8109867

CSO Svizzera 185, I-00139 Torino
Tel: 011 755604 Fax: 011 740436

Silverstar SpA Entire range ✔

Via Paisiello 30, I-00198 Roma
Tel: 06 8848841

P. Adriano 9, I-10139 Torina
Tel: 011 443275

Viale Fulvio Testi 280, I-20126 Milano
Tel: 02 661251 Fax: 02 66101359

Via G. Franco 2/E, I-35010 Cadoneghe (PD)
Tel: 049 706533

Via Masaccio 175, I-50132 Firenze
Tel: 055 572418

Via Marinetti 8R, I-16100 Genova
Tel: 010 389518

Via Collamarini 22, I-40100 Bologna
Tel: 051 538500 Fax: 051 538831

Via Campione 3, I-70100 Bari
Tel: 080 366705

SPAIN

Kontron Elektronik SA

Salvatierra 4, E-28034 Madrid
Tel: 01 358 18 35 Fax: 01 729 37 52 Tlx: 23382

Avenida Diagonal 615, 4 Piso F, E-08029 Barcelona
Tel: 03 419 51 75 Fax: 03 410 86 91

Selco SA

Paseo de la Habana 190, E-28036 Madrid
Tel: 01 326 42 13 Fax: 01 259 22 84 Tlx: 45458

Gran Via de las Cortes Catalanas 1176 bis, E-08020 Barcelona
Tel: 03 314 74 11 Fax: 03 305 26 61

Electronica Oberena SA

Rodriguez Arias 71 bis, E-48013 Bilbao
Tel: 04 442 46 00 Fax: 04 442 55 21

SWEDEN

ITT Multikomponent

Ankdammsgatan 32, Box 1330, S-17126 Solna
Tel: 08 835150 Fax: 08 271807 Tlx: 10516

Derbyvagan 6, S-212 35 Malmo
Tel: 040 496580 Fax: 040 496588

Box 6243, Karlagatan 2, S-400 60 Goteborg
Tel: 031 848010 Fax: 031 194738

Industrigatan 11, S-582 31 Linkoping
Tel: 013 146190 Fax: 013 120859

Traco AB

Box 103, Vinthundsvägen 157, S-123 22 Farsta
Tel: 08 930000 Fax: 08 947732

SWITZERLAND

Elbatex AG Not Hi-Rel ○

Hardstraße 72, CH-5430 Wettingen
Tel: 056 27 51 11 Fax: 056 27 19 24 Tlx: 826300

12 Chemin de la Foret, CH-1024 Ecublens
Tel: 021 634 98 61 Fax: 021 634 98 66

Omni Ray AG Entire range ✔

Industriestraße 31, CH-8305 Dietlikon
Tel: 01 835 21 11 Fax: 01 833 50 81 Tlx: 827336

TURKEY

EBV Elektronik GmbH Entire range ✔

Hans-Pinsel-Straße 4, W-8013 Haar, Germany
Tel: 010 49 89 460 960 Fax: 010 49 89 464 488 Tlx: 524535

UNITED KINGDOM

Access Electronics Ltd Not RF ❑

Jubilee House, Jubilee Road, Letchworth, Herts SG6 1TP
Tel: 0462 402888 Fax: 0462 441687 Tlx: 826505

Arrow Electronics Entire range ✔

St Martins Way Industrial Estate, Cambridge Road, Bedford MK42 0LF
Tel: 0234 347188 Fax: 0234 214674 Tlx: 826251

ESD Electronic Services Not Hi-Rel ○ Not RF ❑

Edinburgh Way, Harlow, Essex CM20 2DF
Tel: 0279 441144 Fax: 0279 441687 Tlx: 818801

Future Electronics Ltd Not Hi-Rel ○ Not RF ❑

Petersfield Avenue, Slough, Berkshire SL2 5EA
Tel: 0753 521193 Fax: 0753 577939 Tlx: 848630

Jermyn Distribution Ltd Not RF ❑

Vestry Estate, Otford Road, Sevenoaks, Kent TN14 5EU
Tel: 0732 743743 Fax: 0732 451251 Tlx: 95142

Macro Marketing Ltd Not RF ❑

Burnham Lane, Slough, Berkshire SL1 6LN
Tel: 0628 604383 Fax: 0628 664020 Tlx: 847945

20/20 Electronics Ltd Not Hi-Rel ○ Not RF ❑

Woolners Way, Stevenage, Hertfordshire SG1 3AJ
Tel: 0438 722020 Fax: 0438 728828 Tlx: 827701